PROJECT INFORMATION

PROJECT ADDRESS:	1445 EL BOSQUE CT. PACIFIC PALISADES, CA 90272
TRACT:	TR 41709
BLOCK:	NONE
LOT:	15
APN:	4431026015
LOT AREA:	APPROX 102,627.4 SQ. FT.
FIRE DISTRICT:	23
CONSTRUCTION TYPE:	V-B
ZONING:	RE15-1-H
OCCUPANCY:	R3 / U
DESCRIPTION:	NEW SINGLE FAMILY RESIDENCE
NUMBER OF STORIES:	2
BUILDING HEIGHT LIMIT:	36'-0"
FRONT SETBACK:	40'-0"
REAR SETBACK:	25'-0"
SIDE YARD SETBACKS:	10'-0"
PARKING:	REQUIRED: 2 SPACES PROVIDED: 3 SPACES IN ATTACHED GARAGE
PROJECT SIZE:	FIRST FLOOR: 4,170 SQ. FT. SECOND FLOOR: 4,680 SQ. FT. TOTAL: 8,850 SQ. FT. GARAGE: 630 SQ. FT.
REVIEWING AGENCY:	CITY OF LOS ANGELES DEPT. OF BUILDING AND SAFETY 201 NORTH FIGUEROA STREET LOS ANGELES, CA 90012
APPLICABLE CODES:	LABC 08
DEFERRED APPROVALS:	RETAINING WALLS OR BLOCK FENCE WALLS GRADING WORK CURTAIN WALLS

VICINITY MAP

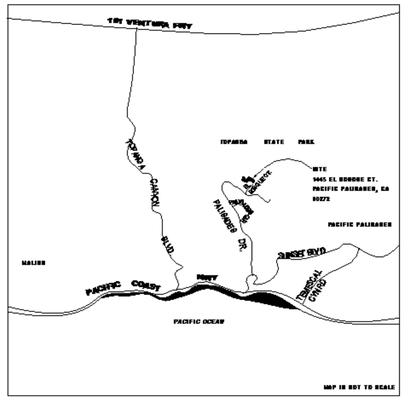

SHEET INDEX

S-1	SURVEY
A0.02	GENERAL NOTES
A0.03	TITLE 24 REPORT
A0.04	APPROVALS
A1.01	SITE / LANDSCAPE PLAN
A1.02	SITE SECTIONS
A1.03	SITE CALCULATIONS / FIRE DEPARTMENT CALCULATIONS
C-1	CIVIL TITLE SHEET
C-2	GRADING AND DRAINAGE PLAN
A2.01	FIRST FLOOR PLAN
A2.02	SECOND FLOOR PLAN
A2.03	ROOF PLAN
A2.11	FIRST FLOOR REFLECTED CEILING PLAN
A2.12	SECOND FLOOR REFLECTED CEILING PLAN
A3.01	EXTERIOR ELEVATIONS
A3.02	EXTERIOR ELEVATIONS
A4.01	BUILDING SECTIONS
A4.02	BUILDING SECTIONS
A4.03	FIREPLACE DRAWINGS
A5.01	INTERIOR ELEVATIONS
A5.02	INTERIOR ELEVATIONS
A5.03	INTERIOR ELEVATIONS
A5.04	INTERIOR ELEVATIONS
A5.05	INTERIOR ELEVATIONS
A5.06	INTERIOR ELEVATIONS
A5.07	INTERIOR ELEVATIONS
A5.08	INTERIOR ELEVATIONS
A5.09	INTERIOR ELEVATIONS
A5.11	ENLARGED BATHROOM PLANS
A6.01	WALL SECTIONS
A6.02	WALL SECTIONS
A6.03	WALL SECTIONS
A6.04	WALL SECTIONS
A6.05	ENLARGED STAIR AND ELEVATOR DRAWINGS
A6.06	STAIR DETAILS
A6.07	ELEVATOR DETAILS
A7.01	WINDOW, EXTERIOR DOOR, AND SKYLIGHT SCHEDULES
A7.02	INTERIOR DOOR SCHEDULES
A9.01	EXTERIOR DETAILS
A9.02	EXTERIOR DETAILS
A9.03	EXTERIOR DETAILS
A9.04	EXTERIOR DETAILS
A9.11	INTERIOR DETAILS
A9.21	TYPICAL FRAMING DETAILS
A9.22	TYPICAL FRAMING DETAILS
A10.01	EXTERIOR PERSPECTIVES
S-1	GENERAL NOTES AND SPECIFICATIONS
S-1.1	QUALITY ASSURANCE SPECIFICATIONS FOR STEEL MOMENT FRAMES
S-1.2	QUALITY ASSURANCE SPECIFICATIONS FOR STEEL MOMENT FRAMES
S-1.3	GENERAL NOTES AND SPECIFICATIONS
S-2	FOUNDATION PLAN
S-3	SECOND FLOOR FRAMING PLAN
S-4	ROOF FRAMING PLAN
S-5	STRUCTURAL DETAILS
S-6	STRUCTURAL DETAILS
S-7	STRUCTURAL DETAILS
S-8	STRUCTURAL SECTIONS
S-9	FRAME ELEVATIONS
S-1	GENERAL NOTES, SPECIFICATIONS AND RETAINING WALL DETAILS
S-2	RETAINING WALL PLAN
M1.0	MECHANICAL LEGENDS, SCHEDULES AND NOTES
M2.1	FIRST FLOOR MECHANICAL PLAN
M2.2	SECOND FLOOR MECHANICAL PLAN
M2.3	MECHANICAL ROOF PLAN
M3.0	MECHANICAL DETAILS
M3.1	MECHANICAL DETAILS
P1.0	PLUMBING LEGENDS, GENERAL NOTES AND SCHEDULES
P2.1	FIRST FLOOR PLUMBING PLAN
P2.2	SECOND FLOOR PLUMBING PLAN
P2.3	PLUMBING ROOF PLAN
P3.0	PLUMBING DETAILS
E1.0	SYMBOLS AND GENERAL NOTES
E1.01	ELECTRICAL SITE PLAN
E2.01	FIRST FLOOR LIGHTING PLAN
E2.02	SECOND FLOOR LIGHTING PLAN
E2.03	FIRST FLOOR POWER PLAN
E2.04	SECOND FLOOR POWER PLAN
E2.05	ROOF POWER PLAN
E3.01	SINGLE LINE DIAGRAM, EQUIPMENT ELEVATIONS & CALCULATIONS
E4.01	PANEL SCHEDULES
E4.02	LUTRON PANEL SCHEDULES
E6.01	FIRST FLOOR CLASS 2 PLAN
E6.02	SECOND FLOOR CLASS 2 PLAN

PROJECT DESCRIPTION

BUILD NEW SINGLE FAMILY
DWELLING W/ ATTACHED GARAGE

LEGAL DESCRIPTION
APN: 4431026015
LOT: 15
TRACT 41709
STREET PLAN; INDEX NO. P-31281

STREET ADDRESS
1445 EL BOSQUE CT.
PACIFIC PALISADES, CA 90272

CLIENTS:
NEAL CASTLEMAN
ELLEN HOFFMAN
19124 PACIFIC COAST HIGHWAY
MALIBU, CA 90265

HOME:
T: 310.459.8600
F: 310.456.2231

WORK:
T: 310.516.1692
F: 310.516.1693

CONTACTS

ARCHITECT:
STEVEN EHRLICH ARCHITECTS
STEVEN EHRLICH
TAKASHI YANAI
NOAH MARBLE

10865 WASHINGTON BLVD.
CULVER CITY, CA 90232
T 310.838.9700
F 310.838.9737

PROJECT MANAGER:
LCG CONSTRUCTION
27560 WINDING WAY
MALIBU, CA 90265

T 310 457 8080
F 310 457 9869

SURVEYOR:
BECKER / MIYAMOTO
2816 SOUTH ROBERTSON BOULEVARD
LOS ANGELES, CA 90034

T 310 839 9530
F 310 839 7612

SOILS ENGINEER:
GEOSOILS
CONTACT: MASOUD RANA
6634 VALJEAN AVENUE
VAN NUYS, CALIFORNIA 91406
T 818 785 2158
F 818 785 1548

CIVIL ENGINEER:
JOHN M CRUIKSHANK CONSULTANTS
CONTACT: CHARLES EDER
411 N. HARBOR BLVD SUITE 201
SAN PEDRO, CALIFORNIA 90731
T 310 241 6550 X227
F 310 320 8871

STRUCTURAL ENGINEER:
C.W. HOWE PARTNERS INC.
CONTACT: CARL HOWE
3347 MOTOR AVENUE, SUITE 200
LOS ANGELES, CALIFORNIA 90034
T 310 838 0383
F 310 838 5380

MECHANICAL ENGINEER:
MB&A CORP
CONTACT: MEL BILOW
115 SOUTH LAMER STREET
BURBANK, CALIFORNIA 91506
T 818 845 1585
F 818 845 6433

LANDSCAPE ARCHITECT:
KATHERINE SPITZ ASSOCIATES INC.
CONTACT: KATHERINE SPITZ
4212 ½ GLENCOE AVENUE
MARIÑA DEL RAY, CALIFORNIA 90292
T 310 574 4460
F 310 574 4462

LIGHTING:
SCOTT HALE
925 SANDPIPER CT.
VENTURA, CALIFORNIA 93001
T 805 444 1886
F 805 664 7031

ELECTRICAL ENGINEER:
VRG INC.
CONTACT: GLEN VAUGHN
1018 SUPERBA AVE
VENICE, CALIFORNIA 90291
T 310 399 7031
F 310 581 3814

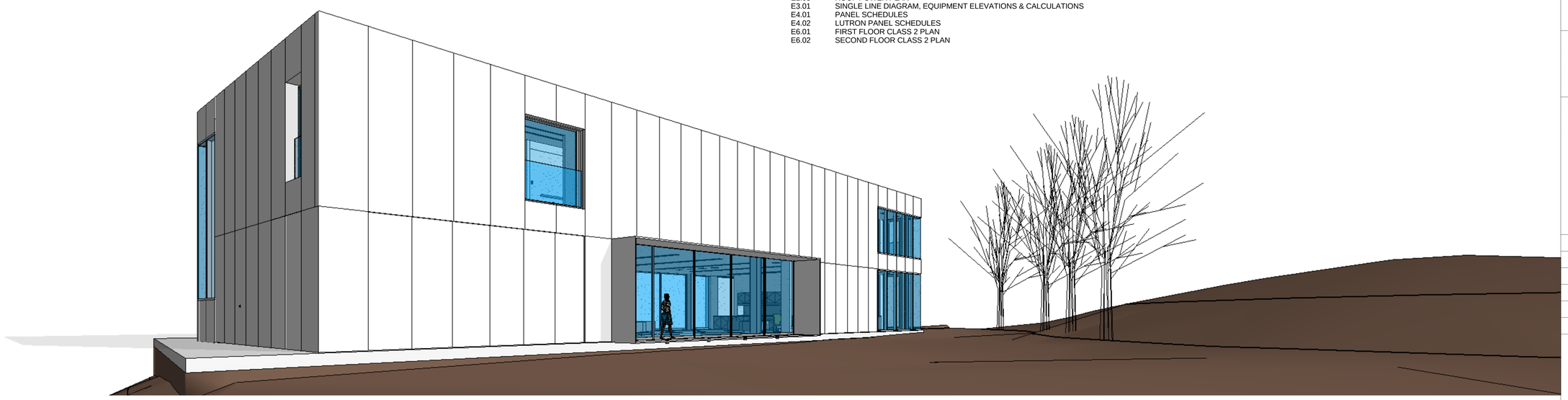

STEVEN EHRLICH
Architects

10865 WASHINGTON BLVD.
CULVER CITY, 90232.3600
TEL 310.838.9700
FAX 310.838.9737
WWW.S-EHRLICH.COM

PROJECT

Hoffman Castleman Residence

1445 El Bosque Ct, Pacific Palisades, CA

CONSULTANTS

NO.	DATE	REVISION

THIS DRAWING AND THE DESIGNS, ARRANGEMENTS, DEPICTIONS, IDEAS AND OTHER INFORMATION CONTAINED HEREIN CONSTITUTE UNPUBLISHED WORK OF STEVEN EHRLICH ARCHITECTS AND SHALL REMAIN PROPERTY OF STEVEN EHRLICH ARCHITECTS IN PERPETUITY. NO PART THEREOF SHALL BE REPRODUCED, COPIED, DISCLOSED, DISTRIBUTED, SOLD, PUBLISHED OR OTHERWISE USED IN ANYWAY WITHOUT THE ADVANCED EXPRESS WRITTEN CONSENT OF STEVEN EHRLICH ARCHITECTS. VISUAL CONTACT WITH THE ABOVE DRAWINGS, OR ANY PART THEREOF, SHALL CONSTITUE CONCLUSIVE EVIDENCE OF ACCEPTANCE OF THESE RESTRICTIONS.

SHEET TITLE

Cover Sheet

DRAWN:	NM
SCALE:	
STATUS:	Back Check
DATE:	04-28-10
FILE:	S:\Nmarble\Hoffman\Hoffman Central Print.rvt
JOB:	491

SHEET NUMBER:

A0.00

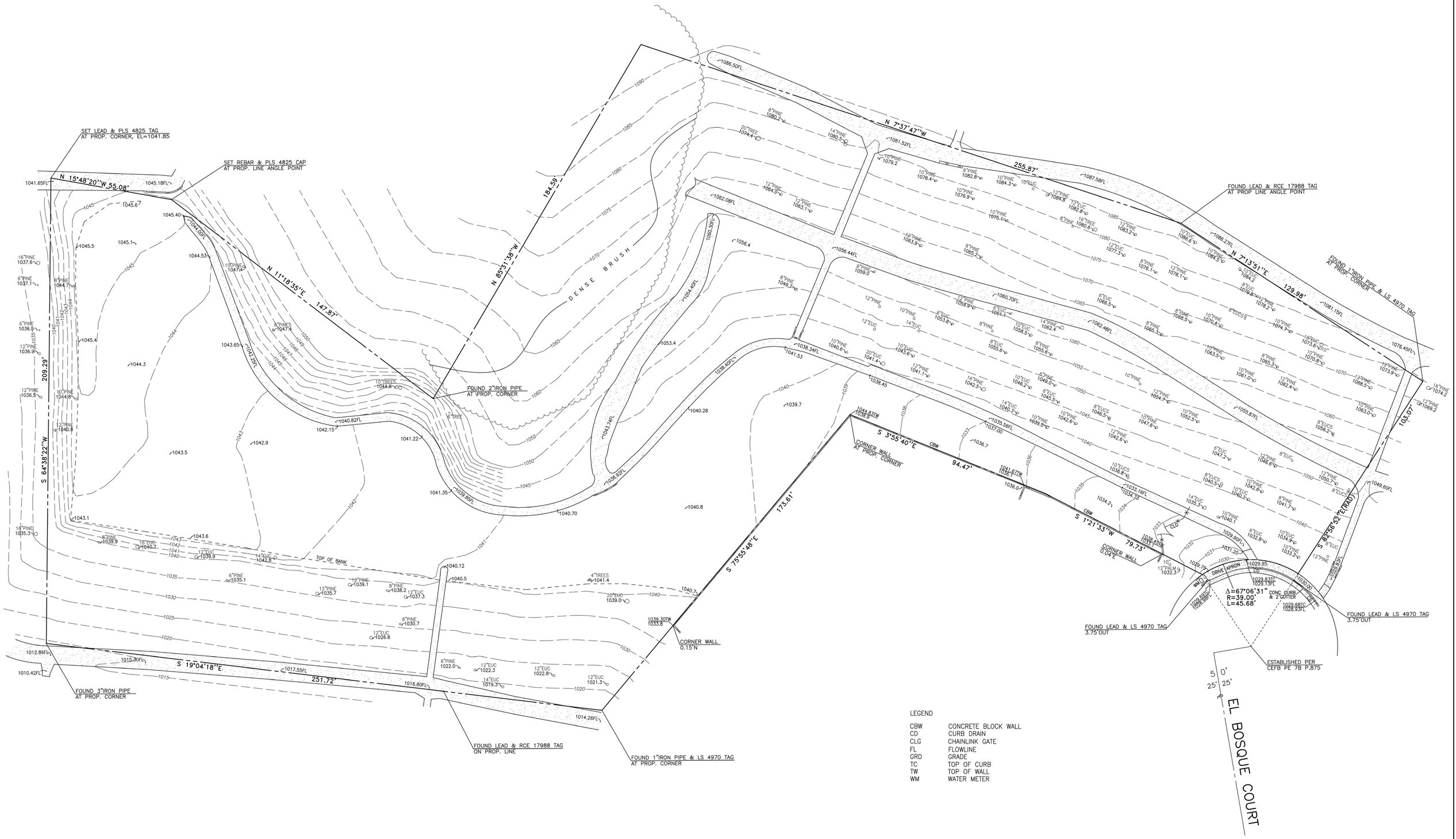

LEGEND

CBW	CONCRETE BLOCK WALL
CD	CURB DRAIN
CLG	CHAINLINK GATE
FL	FLOWLINE
GRD	GRADE
TC	TOP OF CURB
TW	TOP OF WALL
WM	WATER METER

NOTE:
AREA = 102,624 SQ FT (2.36 ACRES)

BENCH MARK:

TOP OF CURB MOC CUL-DE-SAC
EL BOSQUE COURT; TRACT 41709
STREET PLAN; INDEX NO. P-31281

ELEVATION = 1029.94

SKETCH NORTH

TRUE NORTH

SCALE: 1"=16'

BECKER AND MIYAMOTO, INC.
LICENSED LAND SURVEYORS
2816 ROBERTSON BLVD. LOS ANGELES, CA. 90034 (310) 839-9530

TITLE: TOPOGRAPHIC SURVEY
LOT 15
OF TRACT NO. 41709, M.B. 1003-21/26

PREPARED EXCLUSIVELY FOR: NEAL CASTLEMAN

YOSHIAKI MIYAMOTO LS. 4825 PRESIDENT

JOB NO.	10615-2
DRAWN BY:	H
CHECKED BY:	YM
DATE OF SURVEY:	9-2-08
SHEET	1
OF	1

INFORMATION BULLETIN P/GI 2002-022

INFORMATION BULLETIN / PUBLIC - GENERAL INFORMATION
DOCUMENT NO. P/GI 2002-022
GENERAL NOTES FOR SINGLE-FAMILY DWELLINGS

These General Notes are provided as an aid and should not be construed as a complete list of requirements. For additional clarity or for all other requirements, please refer to the City of Los Angeles Building and Zoning Codes.

A. GENERAL
1. The construction shall not restrict a five-foot clear and unobstructed access to any water or power distribution facility (power poles, pull-boxes, transformers, vaults, pumps, valves, meters, appurtenances, etc.) or to the location of the hook-up. The construction shall not be within ten feet of any power lines, whether or not the lines are located on the property. Failure to comply may cause construction delays and/or additional expenses. Obtain approval from the Real Estate Business Unit of the Department of Water and Power, (213) 367- 0562.

2. Obtain permits from Public Works prior to construction for temporary pedestrian protection as required by LABC Section 303.7 for any construction near any street or public area.

3. Provide electrical outlets along the walls of counter space, island and peninsula counter space in kitchens at maximum spacing of 48 inches. (Electrical Code, Section 210-52).

4. The lights in the new and remodeled bathrooms and kitchen shall be energy efficient types meeting minimum 40 lumens per watt, e.g. fluorescent types. (CA State Energy Code, T-24, Sec. 150(k)).

B. BATHROOMS
1. All shower enclosures, regardless of shape, shall have a minimum finished interior area of not less than 1024 square inches (0.66 m2) and shall be capable of encompassing a 30 inch diameter (0.76 m) circle. The minimum area and dimensions shall be maintained to a point 70 inches (1.8 m) above the shower drain outlet. (Plumbing Code, Section 410.4).

2. A minimum 12 inch square access panel to the bathtub trap slip joint connection is required. (Plumbing Code, Section 405.2).

3. Provide Ground-Fault Circuit Interrupter (GFCI) protected electrical outlets within 36 inches of the edge of each basin. The bathroom outlets shall be fed from a dedicated 20 Amp circuit at the panel. (Electrical Code, Section 210-52(d)).

C. LAUNDRY ROOMS
1. Clothes dryer(s) located in an area that is habitable or containing fuel burning appliances shall be exhausted to the outside. (Mechanical Code Section 504.3.1).

2. A 4-inch diameter clothes dryer moisture exhaust duct is limited to a 14 feet length with two elbows from the clothes dryer to the point of termination. Reduce this length by 2 feet for every elbow in excess of 2. (Mechanical Code Sections 504.3.2 and 908).

D. MEANS OF EGRESS
1. Provide 32" wide doors to all interior accessible rooms within a dwelling unit. (LABC, Section 6304.1).

2. Provide emergency egress from sleeping rooms: 24" clear height minimum, 20" clear width minimum, 5.7 sq. ft. minimum area.

E. GRADING AND FOUNDATION
1. Expansive soils have a high content of clay and they swell when wet and shrink when dry. This movement can exert enough pressure to crack sidewalks, driveways, and foundations. These types of soil tend to be very sticky when wet and they develop surface cracks when they dry. If a scoop of soil is wetted and it can be rolled with the hands into an elongated shape, chances are the soil is expansive. This is only an approximation, only through special testing can the expansiveness of the soil be established with certainty. If soil is found to be expansive, foundation and floor slabs shall conform to the following or the recommendation of an approved soils report :
• Depth of footings below the natural and finished grades shall not be less than 24 inches for exterior and 18 inches for interior footings.
• Exterior walls and interior bearing walls shall be supported on continuous footings.
• Footings shall be reinforced with minimum of four ½ -inch diameter deformed reinforcing bars. Two bars shall be placed within 4 inches of the bottom of the footing and two bars within 4 inches of the top of the footings.
• The soil below an interior concrete slab shall be saturated with moisture to a depth of 18 inches prior to placing the concrete.
• Concrete floor slabs on grade shall be placed on a 4" fill of coarse aggregate or on a moisture barrier membrane. The slabs shall be at least 3½ inches thick and shall be reinforced with #4 rebars at 16 inch on center each way. Note: Applicants may request a Grading Pre-Inspection (GPI) report to determine if the site soil is expansive. A fee is necessary.

2. Concrete slabs on expansive soil, compacted fill or slopes over 1:10 shall be placed on a 4-inch fill of coarse aggregate or on a 2" sand bed covered moisture barrier membrane. The slabs shall be at least 3-1/2 inches thick and reinforced with #4 bars spaced at intervals not exceeding 16 inches on center each way. (LABC, Section 1804.4).

3. Provide under-floor net ventilation opening size and locations equal to 1 sq. ft. for each 150 sq. ft. of under floor area and underfloor access crawl hole (18 x 24 inches). Openings shall be as close to corners as practicable and shall provide cross ventilation along the length of at least two opposite sides. Opening shall have 1/4 inch corrosion resistant metal mesh covering. (LABC, Sections 2306.3 and 2306.7).

4. Provide corrosion resistant weep screed below the stucco a minimum of 4" above earth or 2" above paved area. (LABC, Section 2506.5).

5. Provide rain gutters and convey rain water to the street. (LABC, Section 7013.9).

F. ZONING NOTES
1. A/C units and water heaters are not allowed in the required side yard and front yard.

G. SPECIAL HAZARDS
1. Glazing in hazardous locations shall be tempered (LABC, Section 2406.4): Ingress and egress doors; Panels in sliding or swinging doors; Doors and enclosure for hot tub, bathtub and showers. Glazing in wall enclosing these compartments within 5' of standing surface; In wall enclosing stairway landing. Each light of safety glazing (pane) material installed in hazardous locations shall be identified by a permanent label that specifies the labeler, and states that safety glazing material has been utilized in such installations.

2. Pre-fab fireplaces are required to have manufacturer, model, and Underwriter's Laboratories certification (or ICBO).

3. Provide an approved spark arrester for the chimney of a fireplace, stove, or barbecue which uses fuel burning material. (L.A. Fire Code, Section 20.25).

4. An approved seismic gas shutoff valve shall be installed into the fuel gas line at the down stream side of the utility meter and be rigidly connected to the exterior of the building or structure containing the fuel gas piping. (L.A. Ordinance 171,874 - for work over $10,000). See Information Bulletin P/PC 2002-001 "Seismic Gas Shut-Off Valve Requirements" for more details, on LADBS website: *www.ladbs.org*.

5. Water heater must be strapped to the wall. (Plumbing Code, Section 507.3). See Information Bulletin P/PC 2002-003 "How to Brace Your Water Heater" for details.

H. STRUCTURAL REQUIREMENTS
1. Provide lead hole 40%-70% of threaded shank diameter and full diameter for smooth shank portion of Lag Bolts. (1997 NDS).

2. All bolt holes, other than Lag Bolt holes, shall be drilled 1/32" to 1/16" oversized. (1997 NDS, Section 8.1.2.1).

3. Provide lateral support for the top of interior non-bearing walls when manufactured trusses are used. (LABC, Section 1611.5).

4. Provide double joists under parallel bearing partitions. (LABC, Section 2320.8.5).

5. Provide full length studs (balloon frame) on exterior walls of rooms with vaulted ceiling. (LABC, Section 2320.11.1, Table 23 -IV-B).

6. All roof and shear wall nailing shall utilize common nails or galvanized box. "Clipped head" or "sinker nails" are not acceptable.

7. Roof nailing shall be inspected before covering. Face grain of plywood shall be perpendicular to supports. Floor shall have tongue and groove or blocked panel edges. Plywood spans shall conform with Table 23-11-H. (LABC Section106.4.3).

8. All horizontal joints occurring in braced wall panels shall occur over blocking equal in size to the studding. (LABC Section 2320.11.3).

9. Stucco shear walls shall utilize furring, galvanized nails (having a minimum 11 ga., 1-1/2" long, 7/16" diameter head, and furred out a min of 1/4") to attach the lath to the studs. Staples shall not be used. (LABC, Table 25-I). Self furring lath approved by Los Angeles Research Report is permitted.

10. Structural wood shear walls shall be covered with minimum two layers 15# felt underlay prior to placing finish material.

11. Shop weld must be performed in a LADBS licenced fabricator's shop.

12. Plate washers are required for all hold down to post connections. (LABC Section 2315.5.6).

13. Foundation sills shall be Douglas-Fir (Group II Lumber) pressure treated or foundation grade Redwood. (LABC, Section 2306.4). Hold-down connector bolts into wood framing require approved plate washers; and hold-downs shall be tightened just prior to covering the wall framing. (LABC Section 2315.5.6). All bolt holes shall be drilled a maximum of 1/16" oversized and inspector shall verify at the job site.

14. For cutting, notching, and boring of wood framing members and other framing details see Information Bulletin No. P/BC 2002-004 "Type V Sheet."

SYMBOL LEGEND

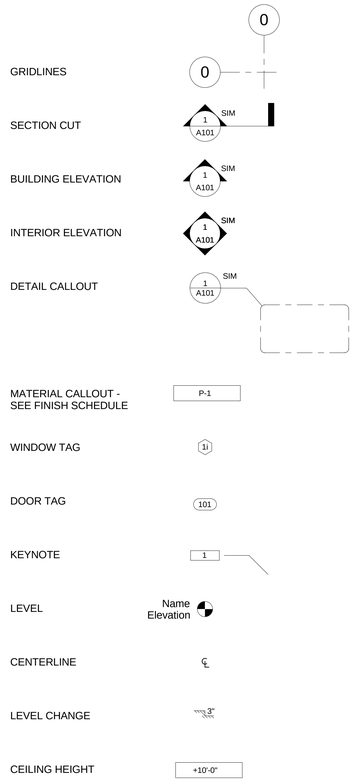

LARR NUMBERS

SKYLIGHTS : RR 23556
STEEL FRAMING : RR 25529
GLASS RAIL : RR 25084

GENERAL NOTES

GENERAL

1. THE CONSTRUCTION SHALL NOT RESTRICT A 5' CLEAR AND UNOBSTRUCTED ACCESS TO ANY WATER OR POWER DISTRIBUTION FACILITY (POWER POLES, PULL BOXES, TRANSFORMERS, VAULTS, PUMPS, VALVES, METERS, ETC.) OR TO THE LOCATION OF THE HOOK-UP. THE CONSTRUCTION SHALL NOT BE WITHIN 10' OF ANY POWER LINES - WHETHER OR NOT THE LINES ARE LOCATED ON THE PROPERTY. FAILURE TO COMPLY MAY CAUSE CONSTRUCTION DELAYS AND/OR ADDITIONAL EXPENSES.

2. OBTAIN PERMITS FROM PUBLIC WORKS PRIOR TO CONSTRUCTION FOR TEMPORARY PEDESTRIAN PROTECTION AS REQUIRED BY LABC SECTION 303.7 FOR ANY CONSTRUCTION NEAR THE STREET.

3. CLOTHES DRYER SHALL BE EXHAUSTED TO THE OUTSIDE.

4. A 4" DIAMETER CLOTHES DRYER MOISTURE EXHAUST DUCT IS LIMITED TO A 14' LENGTH WITH 2 ELBOWS FROM THE CLOTHES DRYER TO THE POINT OF TERMINATION. REDUCE THIS LENGTH By 2' FOR EVERY ELBOW IN EXCESS OF 2.

5. PROVIDE EMERGENCY EGRESS FROM SLEEPING ROOMS: 24" CLEAR HEIGHT MIN., 20" CLEAR WIDTH MIN., 5.7 S.F. MIN. AREA.

6. PROVIDE CORROSION RESISTANT WEEP BELOW THE STUCCO A MIN. OF 4" ABOVE GRADE OR 2" ABOVE PAVED AREA.

7. PROVIDE RAIN GUTTERS AND CONVEY RAIN WATER TO THE STREET.

8. BALCONY GUARDRAIL TO BE 36" A.F.F. WITH MAX. 4" SPACING.

9. LIGHT SWITCHES SHALL BE CENTERED 48" A.F.F. UNLESS OTHERWISE NOTED

10. LIGHT SWITCHES SHALL BE LOCATED 7" FROM DOOR OR FRAMED OPENING.

11. DUPLEX, CABLE AND TELE/DATA OUTLETS SHALL BE LOCATE CENTERED 4" A.F.F. UNLESS OTHERWISE NOTED.

12. WHERE THERE IS AN EXCAVATION OF A GREATER DEPTH THAN ARE THE WALLS OR FOUNDATION OF AN ADJOINING BUILDING OR STRUCTURE AND LOCATED CLOSER TO THE PROPERTY LINE THAN THE DEPTH OF THE EXCAVATION, THE CONTRACTOR SHALL PROVIDE THE DEPARTMENT OF BUILDING AND SAFETY WITH EVIDENCE THAT THE ADJACENT PROPERTY OWNERS HAVE BEEN GIVEN A 30 DAY WRITTEN NOTICE OF SUCH INTENT TO MAKE AN EXCAVATION. THIS NOTICE SHALL STATE THE DEPTH OF SUCH EXCAVATION AND WHEN IT WILL COMMENCE. THIS NOTICE SHALL BE BY CERTIFIED MAIL RETURN RECEIPT REQUESTED.

13. PROVIDE DAMP PROOFING FOR ALL WALLS BELOW GRADE THAT ENCLOSE USABLE SPACE.

14. FOR GLASS HANDRAILS AND GUARDS THE PANELS AND SUPPORT SYSTEM SHALL BE DESIGNED TO WITHSTAND THE LOADS PER LABC CH.16. GLASS HANDRAIL ASSEMBLIES AND GUARDS SHALL ALSO COMPLY WITH SECTION 2407 OF LABC. EXCEPTION: FOR ONE AND TWO-FAMILY DWELLINGS, ONLY THE SINGLE CONCENTRATED LOAD LOAD REQUIRED BY SECTION 1607.1.1

15. VALLEY FLASHINGS SHALL BE NOT LESS THAN 0.019-INCH (0.48 MM) (NO.26 GALVANIZED SHEET GAGE) CORROSION-RESISTANT METAL INSTALLED OVER A MINIMUM 36-INCH-WIDE (914 MM) UNDERLAYMENT CONSISTING OF ONE LAYER OF NO. 72 ASTM CAP SHEET RUNNING THE FULL LENGTH OF THE VALLEY (704A.1.3)

16. ROOF GUTTERS SHALL BE PROVIDED WITH THE MEANS TO PREVENT THE ACCUMULATION OF LEAVES AND DEBRIS IN THE GUTTER (704A. 1.5)

17. PROVIDE STAIRWAY ILLUMINATION. MIN. 1 FOOT-CANDLE AT TREAD RUNS. (2512.1.2)

18. GLASS OR PLASTIC SKYLIGHTS TO BE MOUNTED AT LEAST 4" CURB ABOVE TH ROOF WHEN THE ROOF SLOPES LESS THAN 3:12. GLASS SKYLIGHTS SHALL COMPLY WITH SECTION 2405. PLASTIC SKYLIGHTS SHALL COMPLY WITH SECTION 2610.

19. CHIMNEY MUST EXTEND A MINIMUM OF 2' ABOVE ANY PART OF THE BUILDING WITHIN 10' BUT SHALL NOT BE LESS THAN 3' FEET PASSING THROUGH THE ROOF (2113.9.1).
ADDED NOTE: PROVIDE AN APPROVED SPARK ARRESTOR FOR THE CHIMNEY OF A FIREPLACE, STOVE , OR BARBEQUE(2113.9.1).

SPECIAL HAZARDS

1. SMOKE DETECTORS SHALL RECEIVE THEIR PRIMARY POWER SOURCE FROM THE BUILDING WIRING AND SHALL BE EQUIPPED WITH BATTERY BACK UP AND LOW BATTERY SIGNAL. SMOKE DETECTORS SHALL BE LOCATED IN EACH SLEEPING ROOM AND HALLWAY OR AREA GIVING ACCESS TO A SLEEPING ROOM, AND ON EACH STORY AND BASEMENT FOR HOUSES WITH MORE THAN ONE STORY.

2 . GC SHALL PROVIDE AN APPROVED SPARK ARRESTOR FOR THE CHIMNEY OF A FIREPLACE , STOVE, OR BARBEQUE. THE WIRE MESH IS NOT TO EXCEED 1/2 INCH.

3. AN APPROVED SEISMIC SHUT-OFF WILL BE INSTALLED ON THE FUEL GAS LINE ON THE DOWN STREAM SIDE OF THE UTILITY METER AND BE RIGIDLY CONNECTED TO THE EXTERIOR OF THE BUILDING OR STRUCTURE CONTAINING THE FUEL GAS PIPING.

4. WATER HEATER MUST BE STRAPPED TO THE WALL IN AN ACCEPTABLE MANNER.

5. ROOF COVERING SHALL BE NO LESS THAN CLASS "A" RATED ROOF.

6. PLANS ARE IN COMPLIANCE WITH CA BUILDING AND FIRE CODES (2001) AND DISTRICT AMENDMENT.

7. PRE-FAB FIREPLACES ARE REQUIRED TO HAVE MANUFACTURER, MODEL, AND UL CERTIFICATION.

8. GLAZING IN HAZARDOUS LOCATIONS SHALL BE TEMPERED. INGRESS AND EGRESS DOORS; PANELS IN SLIDING OR SWINGING DOORS; DOORS AND ENCLOSURES FOR HOT TUB, BATH TUBS, AND SHOWERS. WITHIN 2' OF VERTICAL EDGE OF CLOSED DOOR AND WITHIN 5' OF STANDING SURFACE. IN WALL ENCLOSING STAIRWAY LANDING.

ELECTRICAL NOTES

1. SMOKE DETECTORS SHALL BE STATE FIRE MARSHALL APPROVED AND SHALL BE HARD WIRED TO HOUSE. ELECTRICAL CURRENT W/ BATTERY BACKUP.

2. PROVIDE SEPARATE CIRCUIT FOR INDIVIDUAL KITCHEN APPLIANCES E.G. DISHWASHER, RANGE, GARBAGE DISP. ETC.

3. EXTERIOR LIGHTING FOR WALKWAYS AND YARD AREAS SHALL BE WEATHER PROOF TYPE.

4. ALL BASE OUTLETS SHALL BE HORIZONTAL, 8" A.F.F.

5. ALL FLOOR OUTLETS SHALL BE FLUSH UNSCREW TYPE - S.S. FINISH.

6. ALL WIRING TO BE IN FLEXIBLE CONDUIT.

7. ALL SWITCHES AND RECEPTACLES TO BE "LUTRON" AS FOLLOWS: ALL REGULAR SWITCHES, RECEPTACLES, TV, AND PHONE JACKS TO BE CLARO TYPE COLOR TBD. ALL DIMMER SWITCHES TO BE DIVA TYPE COLOR TBD.

8. EXHAUST FANS SHALL PROVIDE A MIN. OF 5 COMPLETE AIR CHANGES PER HOUR.

9. PROVIDE LIGHTS IN THE BATHROOMS AND KITCHEN SHALL BE ENERGY EFFICIENT TYPES MEETING MIN. 40 LUMENS PER WATT. (CA STATE ENERGY CODE, T-24)

10. PROVIDE GFI. PROTECTED ELECTRICAL OUTLETS WITHIN 36" OF THE EDGE OF EACH SINK BASIN. THE BATHROOM OUTLETS SHALL BE FED FROM A DEDICATED 20 AMP CIRCUIT AT THE PANEL.

PLUMBING NOTES

1. PROVIDE ULTRA FLUSH WATER CLOSETS FOR ALL NEW CONSTRUCTION. EXISTING SHOWER HEADS AND TOILETS MUST BE ADAPTED FOR LOW WATER CONSUMPTION.

2. PROVIDE 70 INCH HIGH, NON-ABSORBANT WALL ADJACENT TO SHOWER AND APPROVED SHATTER RESISTANT MATERIALS FOR SHOWER ENCLOSURE

3. COPPER WATER LINES SHALL BE TYPE "L" MINIMUM

4. SHOWERS AND SHOWER-TUB COMBINATIONS SHALL BE PROVIDED WITH INDIVIDUAL CONTROL VALVES OF THE PRESSURE BALANCE OR THERMOSTATIC MIXING VALVE TYPE

5. WATER-SAVING SHOWERHEADS SHALL HAVE A MAX. FLOW OF 3.0 GALLONS PER MINUTE

6. WATER-SAVING SINK AND LAVATORY FAUCETS SHALL HAVE A MAX. FLOW OF 2.75 GALLONS PER MINUTE

7. A MIN. 12 INCH SQUARE ACCESS PANEL TO THE BATHTUB TRAP SLIP JOINT CONNECTION IS REQUIRED.

DRAWINGS / SPECIFICATIONS

1. U.O.N. DIMENSIONS ON DRAWINGS ARE SHOWN TO THE FACE OF STRUCTURE.

2. U.O.N. FLOOR ELEVATIONS ARE TO TOP OF STRUCTURE (PLYWOOD SHEATHING).

3. DO NOT SCALE DRAWINGS. DIMENSIONS SHALL GOVERN AND LARGE SCALE DETAILS SHALL GOVERN OVER SMALLER SCALE DRAWINGS.

4. U.O.N. SPECIFIC NOTES AND DETAILS ON DRAWINGS SHALL TAKE PRECEDENCE OVER GENERAL NOTES AND TYPICAL DETAILS. SPECIFIC NOTES ON DETAILS APPLY TO SIMILAR CONDITIONS.

5. REFERENCE TO ANY DETAIL OR DRAWING IS FOR CONVENIENCE ONLY AND DOES NOT LIMIT THE APPLICATION OF SUCH A DRAWING OR DETAIL.

6. ALL DETAILS ARE TYPICAL UNLESS OTHERWISE NOTED OR REFERENCED ON ARCHITECTURAL DRAWINGS.

7. THE CONTRACT DOCUMENTS INDICATE THE CONCEPT AND POTENTIAL METHOD OF EXECUTING THE WORK. FIELD MODIFICATIONS MAY BE REQUIRED AND SHALL BE PART OF THE SCOPE OF WORK. NO MODIFICATIONS FROM THE DOCUMENTS SHALL BE CONDUCTED PRIOR TO THE APPROVAL OF THE OWNER.

8. DISCREPANCIES IN DRAWINGS OR SPECIFICATIONS, OR BETWEEN DRAWINGS, SPECIFICATIONS, AND/OR SITE CONDITIONS SHALL BE REVIEWED WITH THE ARCHITECT PRIOR TO PROCEEDING WITH THE WORK.

FIELD CONDITIONS

1. CONTRACTOR SHALL VISIT THE SITE SO AS TO FAMILIARIZE WITH EXISTING CONDITIONS AND SATISFY THEMSELVES TO THE NATURE AND SCOPE OF THE WORK. SUBMISSION OF PROPOSALS SHALL BE CONSTRUED AS EVIDENCE THAT SUCH EXAMINATION HAS BEEN MADE, AND LATER CLAIMS FOR LABOR EQUIPMENT OR MATERIALS REQUIRED, OR FOR DIFFICULTIES ENCOUNTERED WHICH COULD HAVE BEEN FORESEEN WITH SUCH EXAMINATION, WILL NOT BE RECOGNIZED.

2. THE CONTRACTOR SHALL FIELD VERIFY ALL DIMENSIONS AND SITE CONDITIONS PRIOR TO STARTING ANY WORK TO ENSURE PROPER FITTING OF WORK AND THE PROPER FITTING OF THE WORK OF OTHER TRADES WITHIN THE WORK.

3. THE CONTRATOR SHALL NOTIFY THE ARCHITECT IMMEDIATELY OF ANY DISCREPANCIES OR INCONSISTENCIES AND REQUEST INSTRUCTIONS FOR A PROPER COURSE OF ACTION PRIOR TO PROCEEDING WITH ANY CHANGES.

4. PROVIDE CONTINUOUS INSPECTION IN ACCORDANCE WITH THE BUILDING CODE FOR REINFORCED CONCRETE, PLACEMENT OF REINFORCING STEEL, STRUCTURAL STEEL WELDING, STRUCTURAL MASONRY, FIELD WELDING AND HIGH STRENGTH BOLTS.

KEYNOTES

ABBREVIATIONS

A.C. ASPHALTIC CONCRETE
AC.T ACOUSTIC TILE
AC.PL. ACOUSTICAL PLASTER
ADD. ADDENDUM
ADJ. ADJUSTABLE
ADJC. ADJACENT
A.F.F. ABOVE FINISHED FLOOR
ALT. ALTERNATE
AL. ALUMINUM
APPROX. APPROXIMATELY
ASB. ASBESTOS

BD. BOARD
BET. BETWEEN
BLDG. BUILDING
BLK. BLOCK
BLKG. BLOCKING
BM. BEAM
BOT. BOTTOM
BSMT. BASEMENT

CPT. CARPET
CAB. CABINET
CA.B. CATCH BASIN
C.C. CENTER TO CENTER
CEM. CEMENT
CEM.PL. CEMENT PLASTER
CT. CERAMIC TILE
C.F. CURB FACE
C.I. CAST IRON
C.J. CONSTRUCTION JOINT
C.L. CHAIN LINK
CLG. CEILING
CLOS. CLOSET
CLR. CLEAR
C.O. CLEANOUT
COL. COLUMN
COMP. COMPOSITION
CMU. CONCRETE MASONRY UNIT
CONC. CONCRETE
CORR. CORRIDOR
CONT. CONTINUOUS
CONTR. CONTRACTOR
CL. CENTERLINE
CU. COPPER
CERT. CERAMIC TILE
CTSK. COUNTERSUNK
CWM. COORDINATE W/ MANUFACTURER

DET. DETAIL
DSP. DRY STANDPIPE
DIA. DIAMETER
DIM. DIMENSION
DIV. DIVISION
DOCS. DOCUMENTS
DN. DOWN
DR. DOOR
D.S. DOWNSPOUT
DWGS. DRAWINGS
EA. EACH
E.J. EXPANSION JOINT
E.P. ELECTRIC PANEL
EL. ELEVATION
ELECT. ELECTRIC
ENAM. ENAMEL
E.W.C. ELECTRIC WATER COOLER
EQ. EQUAL
EXIST. EXISTING
EXP. EXPOSED
EXPAN. EXPANSION
EXT. EXTERIOR

F.D. FLOOR DRAIN
FLOUR. FLUORESCENT
F.S. FACE OF STUDS
F.FL. FINISHED FLOOR
F.O.F. FACE OF FINISH
F.GR. FINISH GRADE
F.E.C. FIRE EXTINGUISHER CABINET
F.H.C. FIRE HOSE CABINET
FIN. FINISH
FL. FLOOR
F.S. FLOOR SINK
FURR. FURRING
FLASH. FLASHING
FPRF'G. FIREPROOFING
FT. FEET
FTG. FOOTING

GA. GAUGE
GALV. GALVANIZED
GFI. GROUND FAULT INTERUPTOR
G.I. GALVANIZED IRON
GL. GLASS
GR. GRADE
GRD. GROUND
GYP. GYPSUM
G.B. GYPSUM BOARD
H.B. HOSE BIBB
H.C. HOLLOW CORE
H.M. HOLLOW METAL
HORIZ. HORIZONTAL
H.PT. HIGH POINT
HR. HOUR
HT. HEIGHT
HTG. HEATING
HWD. HARDWOOD
HWRE. HARDWARE

I.D. INSIDE DIAMETER
INFO. INFORMATION
INT. INTERIOR
INSUL. INSULATION
INV. INVERT
ISOL. ISOLATION

JAN. JANITOR
JT. JOINT

LAB. LABORATORY
LAM. LAMINATED
LB. POUNDS
LAV. LAVATORY
LT. LIGHT
LT.WT. LIGHT WEIGHT
L.PT. LOW POINT
LKR. LOCKER

MACH. MACHINE
MAINT. MAINTENANCE
MFR. MANUFACTURER
M.H. MANHOLE
MATL. MATERIAL
MAX. MAXIMUM
MECH. MECHANICAL
MEMB. MEMBRANE
MET. METAL
MIN. MINIMUM
MISC. MISCELLANEOUS
M.O. MASONRY OPENING
MTD. MOUNTED

NAT. NATURAL
NAT.GR. NATURAL GRADE
N.I.C. NOT IN CONTRACT
NO. NUMBER
NOM. NOMINAL
NTS. NOT TO SCALE

O.A. OVERALL
O.C. ON CENTER
O.D. OUTSIDE DIAMETER
O.D. OVERFLOW DRAIN
O.F. OUTSIDE FACE
OPG. OPENING
OPP. OPPOSITE

PT. PAINT
P.L. PROPERTY LINE
PRTN. PARTITION
P.L. PLATE
PLAS. PLASTER
PLAT. PLATFORM
PLWD. PLYWOOD
POL. POLISHED
PR. PAIR
PROP. PROPERTY
PT. PAINT

R. RISER
RAD. RADIUS
R.C. REINFORCED CONCRETE
RD. ROUND
RF.DR. ROOF DRAIN
RECT. RECTANGULAR
REF. REFERENCE
RGTR. REGISTER
REINF. REINFORCED
REQ. REQUIRED
RESIL. RESILIENT
RET. RETAINING
REV. REVISION
RFG. ROOFING
RM. ROOM
R.O. ROUGH OPENING
RUB. RUBBER

S.C. SOLID CORE
S.D. STORM DRAIN
SCHED. SCHEDULE
SECT. SECTION
SF. SQUARE FEET
SIM. SIMILAR
SHT. SHEET
S.J. SEPARATION JOINT
SM. SMOOTH
SM.PL. SMOOTH PLASTER
SPEC. SPECIFICATIONS
S.S. SERVICE SINK
STL. STEEL
SS. STAINLESS STEEL
STAT. STATIONARY
STOR. STORAGE
STD. STANDARD
STRPG. STRIPPING
STRUCT. STRUCTURAL
SQ. SQUARE
SUSP. SUSPENDED
SYM. SYMMETRICAL

TBD. TO BE DETERMINED
TEL. TELEPHONE
TEMP. TEMPERATURE
TERR. TERRAZZO
THLD. THRESHOLD
THERM. THERMOSTAT
THK. THICK
T.O. TOP OF
TRANF. TRANSFORMER
TRANS. TRANSLUCENT
TRD. TREAD
T.P. TOP OF PAVEMENT
T.S. TOP OF SLAB
T.W. TOP OF WALL
TYP. TYPICAL

U.N.O. UNLESS NOTED OTHERWISE

VAR. VARIES
VER. VERIFY
VERT. VERTICAL
VEST. VESTIBULE
V.T. VINYL TILE

W/ WITH
WAIN. WAINSCOT
W.C. WATER CLOSET
WD. WOOD
W.G. WIRE GLASS
WIND. WINDOW
W.O. WITH OUT

STEVEN EHRLICH Architects
10865 WASHINGTON BLVD.
CULVER CITY, 90232.3600
TEL 310.838.9700
FAX 310.838.9737
WWW.S-EHRLICH.COM

PROJECT

Hoffman Castleman Residence
1445 El Bosque Ct, Pacific Palisades, CA

CONSULTANTS

NO.	DATE	REVISION

THIS DRAWING AND THE DESIGNS, ARRANGEMENTS, DEPICTIONS, IDEAS AND OTHER INFORMATION CONTAINED HEREIN CONSTITUTE UNPUBLISHED WORK OF STEVEN EHRLICH ARCHITECTS AND SHALL REMAIN PROPERTY OF STEVEN EHRLICH ARCHITECTS IN PERPETUITY. NO PART THEREOF SHALL BE REPRODUCED, COPIED, DISCLOSED, DISTRIBUTED, SOLD, PUBLISHED OR OTHERWISE USED IN ANYWAY WITHOUT THE ADVANCED EXPRESS WRITTEN CONSENT OF STEVEN EHRLICH ARCHITECTS. VISUAL CONTACT WITH THE ABOVE DRAWINGS, OR ANY PART THEREOF, SHALL CONSTITUE CONCLUSIVE EVIDENCE OF ACCEPTANCE OF THESE RESTRICTIONS.

SHEET TITLE

General Notes

DRAWN: Author
SCALE: 1 1/2" = 1'-0"
STATUS: Back Check
DATE: 04-28-10
FILE: S:\Nmarble\Hoffman\Hoffman Central Print.rvt
JOB: 491

SHEET NUMBER:

A0.02

Group deVille

CALIFORNIA RESIDENTIAL ENERGY STANDARDS
COMPLIANCE CALCULATIONS:

HOFFMAN-CASTLEMAN RESIDENCE
1445 EL BOSQUE CT.
PACIFIC PALISADES, CA 90272

SEPTEMBER 4, 2008

PREPARED FOR:
STEVEN EHRLICH ARCHITECTS
10865 WASHINGTON BLVD.
CULVER CITY, CA 90232
310.838.9700

BY:
GROUP DeVILLE
1097 SUFFOLK ST.
CAMBRIA, CA 93428

800.995.5662 Tel
800.995.5989 Fax
groupdeville@charter.net

JOB #: 05-72F

IT IS HEREBY CERTIFIED THAT THE DESIGN FOR THIS PROJECT HAS BEEN REVIEWED IN LIGHT OF, AND SUBSTANTIALLY COMPLIES WITH, THE ENERGY CONSERVATION REQUIREMENTS OF THE STATE OF CALIFORNIA (CALIFORNIA CODE OF REGULATIONS, TITLE 24, PART 1, SECTIONS 10-101 THROUGH 10-114 AND TITLE 24, PART 6, SECTIONS 100 THROUGH 152).

[signature] C12945 9/4/08
DOUGLASS C. TABER, PRINCIPAL DATE

CLIMATE ZONE: 6
COMPLIANCE METHOD: COMPUTER PERFORMANCE - MICROPAS VERSION 7.30

NOTE: SIGNATURE ABOVE PERTAINS TO THESE ENERGY CALCULATIONS ONLY, AND DOES NOT IMPLY DESIGN OF, NOR ANY ARRROVAL OF, ANY OTHER ASPECTS OF THE DESIGN OF THIS PROJECT. HEATING AND COOLING SIZING FIGURES AND EQUIPMENT (IF ANY) LISTED WITHIN THIS REPORT ARE FOR THE PURPOSE OF ENERGY CODE COMPLIANCE ONLY, AND ARE IN NO WAY INTENDED TO BE, NOR SHOULD BE CONSTRUED AS, REPRESENTING MECHANICAL SYSTEM DESIGN SERVICES. GROUP DeVILLE WILL THUS ASSUME NO RESPONSIBILITY WHATSOEVER FOR THE IMPROPER USE OF OUR CALCULATIONS. ENERGY CODE COMPLIANCE RECOMMENDATIONS CONTAINED WITHIN THIS REPORT ARE TO BE CONSIDERED AS MINIMUM CODE REQUIREMENTS ONLY. ADDITIONAL CONSTRUCTION MEASURES MAY BE NECESSARY AND/OR ADVISABLE IN ORDER TO ACHIEVE DESIRED BUILDING COMFORT AND ENERGY CONSERVATION LEVELS.

Group deVille

CONTENTS

	Page
Energy-Related Building Construction Requirements	2
Certificate of Compliance (Form CF-1R)	3
Mandatory Measures Checklist (Form MF-1R)	9
Kitchen Lighting Worksheet (Form WS-5R)	13
Heating & Cooling Load Calculations (ASHRAE Method)	14

COMPLIANCE PROCEDURE

The residence design was modeled using the "Micropas" computer program, as certified by the California Energy Commission for compliance with "Title 24" Residential Energy Standards in effect as of October 1, 2005. Energy-related computer input data and approximate heating and cooling loads are included as a part of this package.

In compliance with the certification provisions of the Micropas program, the computer run calculates both the energy use of the "Proposed Design" and that of the "Standard Design". Energy code compliance for the project, as summarized below from Form C1-R, is demonstrated by the "Proposed Design Energy Use" being less than or equal to the "Standard Design Energy Use". Since this the case for the design for this project, with energy conservation measures as specified elsewhere in this report, the building design as proposed complies with "Title 24" Residential Energy Conservation Standards for construction in the Climate Zone for which it has been evaluated.

Standard Design Energy Use (TDV-KBtu/SF/Yr.) = 12.84
Proposed Design Energy Use (TDV-KBtu/SF/Yr.) = 12.83

1.

Group deVille

05-72F
9/4/08

ENERGY-RELATED BUILDING CONSTRUCTION REQUIREMENTS

Following are listed the insulation, glazing, and other requirements which are necessary for "Title 24" compliance for this project, as determined from calculations located elsewhere in this report. These requirements are in addition to the California Energy Commission (CEC) "Mandatory Measures" list and "Appliance Efficiency Standards" (see Form MF-1R).

Insulation:

- R-19 Cavity insulation plus R-8 sheathing insulation in all metal-framed walls to exterior.
- All metal-framed walls to exterior to incorporate "house wrap" air infiltration retarder.
- All opaque-glass ("spandrel") areas, if any, of curtain wall construction are to have R-19 continuous insulation behind opaque spandrel-glass panels.
- R-19 Cavity insulation in all metal-framed walls to garage, mechanical equipment rooms, storage rooms, or to other unconditioned spaces.
- R-30 Rigid roof sheathing insulation required in all roofs to exterior.
- R-30 Cavity insulation in all floors over garage, exterior, mechanical equipment rooms, storage rooms, or over other unconditioned spaces.
- R-30 Cavity insulation in all soffits over exterior.
- No slab-edge insulation required.

Glazing:

- All sliding glass doors in may be single-glazed, and may have any frame material.
- All fixed and operable windows, hinged ("French") doors, and curtain-wall window areas are to have double glazing, and may have any frame material.
- All skylights are to be double-glazed, with any frame material, and with spectrally-selective ("Low-E" or equivalent) glazing and a maximum overall "U-Value" rating of 0.60.

Shading:

- All skylights to have spectrally-selective ("Low-E" or equivalent) coating and a maximum Solar Heat Gain Coefficient (SHGC) rating of 0.50.

HVAC:

- All gas furnaces serving all Second Floor rooms and First Floor Kitchen, Kitchen Powder Room, and Office are to have 0.80 (min.) Annual Fuel Utilization Efficiency (AFUE) ratings.
- All gas furnaces serving rooms not listed above are to have 0.915 (min.) Annual Fuel Utilization Efficiency (AFUE) ratings.
- All air conditioners serving both First Floor and Second Floor rooms are to have 14.50 (min.) Seasonal Energy Efficiency Ratio (SEER) ratings.
- R-4.2 (min.) duct insulation on all heating and cooling supply and return ductwork located in unconditioned spaces.
- Minimum heating and cooling loads (without ANY over-sizing or other design factors - see notes on cover and on HVAC calculation summary page of this report):

Approximate total heating load: 235,912 Btu/Hr.
Approximate total cooling load: 260,285 Btu/Hr.

2.

Group deVille

05-72F
9/4/08

(ENERGY-RELATED CONSTRUCTION REQUIREMENTS, CONTINUED)

Water Heating:

- One 60-gallon (max.) gas-fired storage-type water heater with 0.80 (min.) Recovery Efficiency (RE) rating, 2.5% (max.) standby heat loss percentage, recirculation-pump hot-water distribution system, and R-12 (min.) external insulation blanket.
- Recirculation pump to be equipped with automatic timer & temperature shutoff controls.
- All hot-water supply piping (except runouts to individual fixtures) to be insulated with R-4.0 (min.) pipe insulation.

Thermal Mass Elements - Exposed Slab:

- Exposed concrete, stone, tile, vinyl, or hardwood flooring in the following areas:

155.5	Sq.Ft.	Stair & Halls.
36.3	"	Garage Powder Room
2185.9	"	Living/Dining Room
262.8	"	Office
228.2	"	Kitchen & Kitchen Hall
18.8	"	Kitchen Powder Room
2887.5	Sq.Ft.	Total

Thermal Mass Elements - Other Masses:

- 5/8" (min.) thickness gypsum board or plaster to be used for all interior wall or ceiling finishes where gypsum board is specified.
- Ceramic tile or stone countertops in Kitchen, Living/Dining Room, Powder Rooms, and all Baths = 257 Sq.Ft. (min.).
- Ceramic tile or stone countertop and tub/shower wainscots in Kitchen, Living/Dining Room, Powder Rooms, and all Baths = 371 Sq.Ft. (min.).
- 5-1/2" (min.) concrete to be used in the floor construction of all Second Floor rooms and to be exposed (with stone, tile, vinyl, wood, or polished finish) = 3543 Sq.Ft. (min).

2A.

CERTIFICATE OF COMPLIANCE: RESIDENTIAL COMPUTER METHOD CF-1R Page 1

Project Title.......... HOFFMAN-CASTLEMAN RESID. Date..09/04/08 11:28:24
Project Address........ 1445 El Bosque Ct. *******
Pacific Palisades, Calif.*v7.30*
Documentation Author... DOUGLASS C. TABER *******
Group DeVille
1097 Suffolk St.
Cambria, CA 93428
800.995.5662
Climate Zone........... 06
Compliance Method...... MICROPAS7 v7.30 for 2005 Standards by Enercomp, Inc.

Building Permit #
Plan Check / Date
Field Check/ Date

MICROPAS7 v7.30 File-72F Wth-CTZ06S05 Program-FORM CF-1R
User#-MP0174 User-Group DeVille Run-PROPOSED DESIGN

MICROPAS7 ENERGY USE SUMMARY

Energy Use (kTDV/sf-yr)	Standard Design	Proposed Design	Compliance Margin
Space Heating..........	5.18	7.30	-2.12
Space Cooling..........	4.40	2.40	2.00
Water Heating..........	3.26	3.13	0.13
Total	12.84	12.83	0.01

*** Building complies with Computer Performance ***

GENERAL INFORMATION

HERS Verification.......... Not Required
Conditioned Floor Area..... 8393.8 sf
Building Type.............. Single Family Detached
Construction Type .... New
Fuel Type .... NaturalGas
Building Front Orientation. Front Facing 155 deg (SE)
Number of Dwelling Units... 1
Number of Building Stories. 2
Weather Data Type.......... FullYear

Floor Construction Type.... Slab On Grade
Number of Building Zones... 1
Conditioned Volume......... 110811 cf
Slab-On-Grade Area......... 3958 sf
Glazing Percentage......... 38.7 % of floor area
Average Glazing U-factor... 1.02 Btu/hr-sf-F
Average Glazing SHGC....... 0.76
Average Ceiling Height..... 13.2 ft

3.

CERTIFICATE OF COMPLIANCE: RESIDENTIAL COMPUTER METHOD CF-1R Page 2
Project Title.......... HOFFMAN-CASTLEMAN RESID. Date..09/04/08 11:28:24

BUILDING ZONE INFORMATION

Zone Type	Floor Area (sf)	Volume (cf)	# of Dwell Units	# of People	Conditioned	Thermostat Type	Vent Height (ft)	Vent Area (sf)	Verified Leakage or Housewrap
Residence	8394	110811	1.00	20.0	Yes	Setback	8.0	Standard	Housewrap

OPAQUE SURFACES

Surface	Frame Type	Area (sf)	U-factor	Cavity R-val	Sheathing R-val	Act Azm	Tilt	Solar Gains	Appendix IV Reference	Location/ Comments
1 Wall	Metal	1743	0.074	19	8	155	90	Yes	None	
2 Wall	Metal	603	0.074	19	8	245	90	Yes	None	EXTERIOR WALLS
3 Wall	Metal	1323	0.074	19	8	335	90	Yes	None	
4 Wall	Metal	889	0.074	19	8	65	90	Yes	None	
5 Wall	Metal	406	0.183	19	0	155	90	No	None	MECH/STGE.WALL
6 Wall	Metal	385	0.183	19	0	155	90	No	None	WALL TO GARAGE
7 Door	None	28	0.500	0	0	155	90	No	None	DOOR TO GAR.
10 FloorExt	Metal	655	0.060	30	0	n/a	0	No	None	FLR.OVR.GARAGE
11 FloorExt	Metal	55	0.060	30	0	n/a	0	No	None	FLR.OVR.EXTER.
12 FloorExt	Metal	103	0.060	30	0	n/a	0	No	None	FLR.OVR.MECHRM
13 Roof	Metal	4677	0.031	0	30	n/a	0	Yes	None	ALL ROOFS/CLGS

PERIMETER LOSSES

Surface	Length (ft)	F2 Factor	Insul R-val	Solar Gains	Appendix IV Reference	Location/ Comments
8 SlabEdge	265	0.730	R-0	No	IV.26 A1	EXTER.SLABEDGE
9 SlabEdge	68	0.560	R-0	No	IV.26 C7	GAR.SLABEDGE

FENESTRATION SURFACES

Orientation		Area (sf)	U-factor	SHGC	Act Azm	Tilt	Exterior Shade Type/SHGC	Interior Shade Type/SHGC
1 Window	Front (SE)	240.0	0.710	0.730	155	90	Standard/0.76	Standard/0.68
2 Door	Front (SE)	480.0	1.250	0.800	155	90	Standard/0.76	Standard/0.68
3 Window	Front (SE)	180.0	0.710	0.730	155	90	Standard/0.76	Standard/0.68
4 Window	Front (SE)	72.0	0.710	0.730	155	90	Standard/0.76	Standard/0.68
5 Window	Left (SW)	152.0	0.710	0.730	245	90	Standard/0.76	Standard/0.68
6 Window	Left (SW)	36.0	0.710	0.730	245	90	Standard/0.76	Standard/0.68
7 Window	Back (NW)	380.0	0.710	0.730	335	90	Standard/0.76	Standard/0.68
8 Door	Back (NW)	384.0	1.250	0.800	335	90	Standard/0.76	Standard/0.68
9 Door	Back (NW)	384.0	1.250	0.800	335	90	Standard/0.76	Standard/0.68
10 Door	Back (NW)	282.2	1.250	0.800	335	90	Standard/0.76	Standard/0.68
11 Door	Back (NW)	132.5	1.250	0.800	335	90	Standard/0.76	Standard/0.68
12 Door	Back (NW)	132.8	1.250	0.800	335	90	Standard/0.76	Standard/0.68

4.

CERTIFICATE OF COMPLIANCE: RESIDENTIAL COMPUTER METHOD CF-1R Page 3
Project Title.......... HOFFMAN-CASTLEMAN RESID. Date..09/04/08 11:28:24

FENESTRATION SURFACES

Orientation		Area (sf)	U-factor	SHGC	Act Azm	Tilt	Exterior Shade Type/SHGC	Interior Shade Type/SHGC
13 Door	Back (NW)	66.0	1.250	0.800	335	90	Standard/0.76	Standard/0.68
14 Door	Right (NE)	32.0	0.770	0.700	65	90	Standard/0.76	Standard/0.68
15 Window	Right (NE)	20.0	0.710	0.730	65	90	Standard/0.76	Standard/0.68
16 Door	Right (NE)	32.0	0.770	0.700	65	90	Standard/0.76	Standard/0.68
17 Window	Right (NE)	48.0	0.710	0.730	65	90	Standard/0.76	Standard/0.68
18 Window	Right (NE)	16.0	0.710	0.730	65	90	Standard/0.76	Standard/0.68
19 Window	Right (NE)	12.0	0.790	0.700	65	90	Standard/0.76	Standard/0.68
20 Door	Right (NE)	36.0	0.770	0.700	65	90	Standard/0.76	Standard/0.68
21 Window	Right (NE)	36.0	0.710	0.730	65	90	Standard/0.76	Standard/0.68
22 Skylight	Horz	4.0	0.600	0.500	155	0	None/1	None/1
23 Skylight	Horz	4.0	0.600	0.500	155	0	None/1	None/1
24 Skylight	Horz	4.0	0.600	0.500	155	0	None/1	None/1
25 Skylight	Horz	4.0	0.600	0.500	155	0	None/1	None/1
26 Skylight	Horz	33.0	0.600	0.500	155	0	None/1	None/1
27 Skylight	Horz	22.5	0.600	0.500	155	0	None/1	None/1
28 Skylight	Horz	22.5	0.600	0.500	155	0	None/1	None/1

OVERHANGS

Surface	Area (sf)	Window Width	Window Height	Overhang Depth	Overhang Height	Left Extension	Right Extension
8 Door	384.0	32	12	.75	0	10	10
9 Door	384.0	n/a	12	.75	0	n/a	n/a
10 Door	282.2	31.4	9	4.75	0	10	10
11 Door	132.5	n/a	9	.75	0	n/a	n/a
12 Door	132.8	n/a	9	.75	0	n/a	n/a
13 Door	66.0	n/a	9	.75	0	n/a	n/a

SIDE FINS

Surface	Area (sf)	Window Width	Window Heigth	Left Fin Ex-tension	Left Fin Depth	Left Fin Height	Right Fin Ex-tension	Right Fin Depth	Right Fin Height
8 Door	384.0	32	12	0	0	0	.1	.75	15
10 Door	282.2	31.4	9	.1	4	4	.1	4.75	4

THERMAL MASS

Mass Type	Area (sf)	Thick (in)	Heat Cap	Conduct-ivity	UIMC	Surface R-value	Location/Comments
1 SlabOnGrade	1070	3.5	28.0	0.98	1.80	R-2.0	NON-EXP.CONC.SLAB AREA
2 SlabOnGrade	2888	3.5	28.0	0.98	4.60	R-0	EXPOSED CONC.SLAB AREA
3 InteriorHorz	8393	0.1	13.0	0.09	0.10	R-0	5/8 GYP.BOARD CEILINGS
4 InteriorVert	25179	0.1	13.0	0.09	0.10	R-0	5/8 GYP.BOARD WALLS

5.

CERTIFICATE OF COMPLIANCE: RESIDENTIAL COMPUTER METHOD CF-1R Page 4
Project Title.......... HOFFMAN-CASTLEMAN RESID. Date..09/04/08 11:28:24

THERMAL MASS

Mass Type	Area (sf)	Thick (in)	Heat Cap	Conduct-ivity	UIMC	Surface R-value	Location/Comments
5 InteriorHorz	257	1.0	24.0	0.67	1.70	R-0	TILE/STONE COUNTERTOPS
6 InteriorVert	371	1.0	24.0	0.67	1.70	R-0	TILE/STONE WAINSCOTS
7 InteriorHorz	450	5.5	28.0	0.98	2.00	R-2.0	NON-EXP.CONC.@2ND.FLR.
8 InteriorHorz	3543	5.5	28.0	0.98	1.20	R-0	EXPOSED.CONC.@2ND.FLR.

HVAC SYSTEMS

System Type	Minimum Efficiency	Verified EER	Verified Refrig Charge or TXV	Verified Adequate Airflow	Verified Fan Watt Draw	Verified Maximum Cooling Capacity
Furnace	0.842 AFUE**	n/a	n/a	n/a	n/a	n/a
ACSplit	14.50 SEER	No	No	No	No	No

**Area-weighted average AFUE value: see "Gas Furnace AFUE Note" below

HVAC SIZING

System Type	Total Heating Load (Btu/hr)	Sensible Cooling Load (Btu/hr)	Design Cooling Capacity (Btu/hr)	Verified Maximum Cooling Capacity (Btu/hr)
Furnace	235912	n/a	n/a	n/a
ACSplit	n/a	224152	260285	n/a

Sizing Location........... MALIBU MTNS.
Winter Outside Design...... 33 F
Winter Inside Design....... 70 F
Summer Outside Design...... 90 F
Summer Inside Design....... 75 F
Summer Range............... 21 F

DUCT SYSTEMS

System Type	Duct Location	Duct R-value	Verified Duct Leakage	Verified Surface Area	Verified Buried Ducts
Furnace	Attic	R-4.2	No	No	No
ACSplit	Attic	R-4.2	No	No	No

6.

CERTIFICATE OF COMPLIANCE: RESIDENTIAL COMPUTER METHOD CF-1R Page 5
Project Title.......... HOFFMAN-CASTLEMAN RESID. Date..09/04/08 11:28:24

WATER HEATING SYSTEMS

Tank Type	Heater Type	Distribution Type	Number in System	Energy Factor	Tank Size (gal)	External Insulation R-value
1 Large	Gas	Recirc/TimeTemp	1	n/a	60	R-12

WATER HEATING SYSTEMS DETAIL

System	Recovery Efficiency	Rated Input	Standby Loss Fraction	Internal Tank Insulation R-value	Pilot Light
1 Large	.80	n/a	.025	R- n/a	0

SPECIAL FEATURES AND MODELING ASSUMPTIONS

*** Items in this section should be documented on the plans, ***
*** installed to manufacturer and CEC specifications, and ***
*** verified during plan check and field inspection. ***

This building incorporates a Housewrap/Air Infiltration Retarder.

This building incorporates a High Mass Design.

This building incorporates a non-standard Water Heating System.

REMARKS

IMPORTANT WATER HEATER INSULATING BLANKET NOTE:
Proposition 65 Toxic Safety/Flammability Safety/ & other safety labels on water heater are to remain visible to occupant. Water heater blanket shall be installed in accordance with manufacturer recommendations & in such a way as to prevent any possibility of either causing or contributing to the spread of fire.

GAS FURNACE AFUE NOTE:
Listed value above is area-weighted average AFUE rating for house based upon the following calculation:
AFUE = ((5295.9 SF x .80 AFUE)+(3097.9 SF x .915 AFUE))/8393.8 SF
AFUE = 0.842

.80 and .915 AFUE values listed above are from actual HVAC design for this house, and floor areas served (in SF) have been calculated from building plans.

7.

CERTIFICATE OF COMPLIANCE: RESIDENTIAL COMPUTER METHOD CF-1R Page 6
Project Title.......... HOFFMAN-CASTLEMAN RESID. Date..09/04/08 11:28:24

COMPLIANCE STATEMENT

This certificate of compliance lists the building features and performance specifications needed to comply with Title-24, Parts 1 and 6 of the California Code of Regulations, and the administrative regulations to implement them. This certificate has been signed by the individual with overall design responsibility.

DESIGNER or OWNER

Name....
Company. STEVEN EHRLICH ARCHITECTS
Address. 10865 Washington Blvd.
Culver City, CA 90232
Phone... 310.838.9700
License.
Signed.. ____________ (date)

DOCUMENTATION AUTHOR

Name.... DOUGLASS C. TABER
Company. Group DeVille
Address. 1097 Suffolk St.
Cambria, CA 93428
Phone... 800.995.5662
Signed. [signature] 9/4/08 (date)

ENFORCEMENT AGENCY

Name....
Title...
Agency..
Phone...
Signed.. ____________ (date)

8.

MANDATORY MEASURES CHECKLIST: RESIDENTIAL MF-1R Page 1

Project Title.......... HOFFMAN-CASTLEMAN RESID. Date..09/04/08 11:28:24
Project Address........ 1445 El Bosque Ct. *******
Pacific Palisades, Calif.*v7.30*
Documentation Author... DOUGLASS C. TABER *******
Group DeVille
1097 Suffolk St.
Cambria, CA 93428
800.995.5662
Climate Zone........... 06
Compliance Method...... MICROPAS7 v7.30 for 2005 Standards by Enercomp, Inc.

Building Permit #
Plan Check / Date
Field Check/ Date

MICROPAS7 v7.30 File-72F Wth-CTZ06S05 Program-FORM MF-1R
User#-MP0174 User-Group DeVille Run-PROPOSED DESIGN

Note: Lowrise residential buildings subject to the Standards must contain these measures regardless of the compliance approach used. More stringent compliance requirements from the Certificate of Compliance supersede the items marked with an asterisk (*). When this checklist is incorporated into the permit documents, the features noted shall be considered by all parties as minimum component performance specifications for the mandatory measures whether they are shown elsewhere in the documents or on this checklist only.

BUILDING ENVELOPE MEASURES	n/a	De-sign-er	En-force-ment
*150(a): Minimum R-19 insulation in wood framed ceiling or equivalent U-factor in metal frame ceiling	____	_XX_	____
150(b): Loose fill insulation manufacturer's labeled R-Value	____	_XX_	____
*150(c): Minimum R-13 wall insulation in wood framed walls or equivalent U-factor in metal frame walls (does not apply to exterior mass walls)	____	_XX_	____
*150(d): Minimum R-13 raised floor insulation in framed floors or equivalent U-factor	____	_XX_	____
150(e): Installation of Fireplaces, Decorative Gas Appliances and Gas Logs			
1. Masonry and factory-built fireplaces have:			
a. Closeable metal or glass door covering the entire opening of the firebox	____	_XX_	____
b. Outside air intake with damper and control, flue damper and control	____	_XX_	____
2. No continuous burning gas pilot lights allowed	____	_XX_	____
150(f): Air retarding wrap installed to comply with Sec. 151 meets requirements specified in ACM Residential Manual	____	_XX_	____
150(g): Vapor barriers mandatory in Climate Zones 14,16 only	_XX_	____	____
150(l): Slab edge insulation - water absorption rate for the insulation material without facings no greater than 0.3%, water vapor permeance rate no greater than 2.0 perm/inch	____	_XX_	____
118: Insulation specified or installed meets insulation quality standards. Indicate type and include CF-6R form	____	_XX_	____
116-17: Fenestration Products, Exterior Doors and Infiltration/ Exfiltration Controls			
1. Doors and windows between conditioned and unconditioned spaces designed to limit air leakage	____	_XX_	____
2. Fenestration products (except field-fabricated) have label with certified U-factor, certified Solar Heat Gain Coefficient (SHGC), and infiltration certification	____	_XX_	____

9.

MANDATORY MEASURES CHECKLIST: RESIDENTIAL MF-1R Page 2
Project Title.......... HOFFMAN-CASTLEMAN RESID. Date..09/04/08 11:28:24

	n/a	De-sign-er	En-force-ment
3. Exterior doors and windows weatherstripped; all joints and penetrations caulked and sealed	____	_XX_	____
SPACE CONDITIONING, WATER HEATING AND PLUMBING SYSTEM MEASURES			
110-113: HVAC equipment, water heaters, showerheads and faucets certified by the Energy Commission	____	_XX_	____
150(h): Heating and/or cooling loads calculated in accordance with ASHRAE, SMACNA or ACCA	____	_XX_	____
150(i): Setback thermostat on all applicable heating and/or cooling systems	____	_XX_	____
150(j): Water system pipe and tank insulation and cooling systems line insulation			
1. Storage gas water heaters rated with an Energy Factor less than 0.58 must be externally wrapped with insulation having an installed thermal resistance of R12 or greater	____	_XX_	____
2. Back-up tanks for solar system, unfired storage tanks, or other indirect hot water tanks have R-12 external insulation or R-16 internal and indicated on the exterior of the tank showing the R-value	____	_XX_	____
3. The following piping is insulated according to Table 150-A/B or Equation 150-A Insulation Thickness:			
1. First 5 feet of hot and cold water pipes closest to water heater tank, non-recirculating systems, and entire length of recirculating sections of hot water pipes shall be insulated to Table 150B	____	_XX_	____
2. Cooling system piping (suction, chilled water, or brine lines), piping insulated between heating source and indirect hot water tank shall be insulated to Table 150-B and Equation 150-A	____	_XX_	____
4. Steam hydronic heating systems or hot water systems >15 psi, meet requirements of Table 123-A	_XX_	____	____
5. Insulation must be protected from damage, including that due to sunlight, moisture, equipment maintenance and wind	____	_XX_	____
6. Insulation for chilled water piping and refrigerant suction piping includes a vapor retardant or is enclosed entirely in conditioned space	____	_XX_	____
7. Solar water-heating systems/collectors are certified by the Solar Rating and Certification Corporation	_XX_	____	____
*150(m): Ducts and Fans			
1. All ducts and plenums installed, sealed and insulated to meet the requirements of the CMC Sections 601, 602, 603, 604, 605 and Standard 6-5; supply-air and return-air ducts and plenums are insulated to a minimum installed level of R-4.2 or enclosed entirely in conditioned space. Openings shall be sealed with mastic, tape, or other duct-closure system that meets the applicable requirements of UL 181, UL 181A, or UL 181B or aerosol sealant that meets the requirements of UL 723. If mastic or tape is used to seal openings greater than 1/4 inch, the combination of mastic and either mesh or tape shall be used	____	_XX_	____
2. Building cavities, support platforms for air handlers, and plenums defined or constructed with materials other than sealed sheet metal, duct board or flexible duct shall not be used for conveying conditioned air. Building cavities and			

10.

MANDATORY MEASURES CHECKLIST: RESIDENTIAL MF-1R Page 3
Project Title.......... HOFFMAN-CASTLEMAN RESID. Date..09/04/08 11:28:24

	n/a	De-sign-er	En-force-ment
support platforms may contain ducts. Ducts installed in cavities and support platforms shall not be compressed to cause reductions in the cross-sectional area of the ducts	____	_XX_	____
3. Joints and seams of duct systems and their components shall not be sealed with cloth backed rubber adhesive duct tapes unless such tape is used in combination with mastic and draw bands	____	_XX_	____
4. Exhaust fan systems have back draft or automatic dampers	____	_XX_	____
5. Gravity ventilating systems serving conditioned space have either automatic or readily accessible, manually operated dampers	_XX_	____	____
6. Protection of Insulation. Insulation shall be protected from damage due to sunlight, moisture, equipment maintenance and wind. Cellular foam insulation shall be protected as above or painted with a coating that is water retardant and provides shielding from solar radiation that can cause degradation of the material	____	_XX_	____
7. Flexible ducts cannot have porous inner cores	____	_XX_	____
114: Pool and Spa Heating Systems and Equipment			
1. A thermal efficiency that complies with the Appliance Efficiency Regulations, on-off switch mounted outside of the heater, weatherproof operating instructions, no electric resistance heating and no pilot light	____	_XX_	____
2. System is installed with:			
a. At least 36 inches of pipe between filter and heater for future solar heating			
b. Cover for outdoor pools or outdoor spas.	____	_XX_	____
3. Pool system has directional inlets and a circulation pump time switch	____	_XX_	____
115: Gas-fired central furnaces, pool heaters, spa heaters or household cooking appliances have no continuously burning pilot light (Exception: Non-electrical cooking appliances with pilot < 150 Btu/hr)	____	_XX_	____
118(i): Cool Roof material meets specified criteria	_XX_	____	____

RESIDENTIAL LIGHTING MEASURES	n/a	De-sign-er	En-force ment
150(k)1: HIGH EFFICACY LUMINAIRES OTHER THAN OUTDOOR HID: contain only high efficacy lamps as outlined in Table 150-C, and do not contain a medium screw base socket (E24/E26). Ballast for lamps 13 watts or greater are electronic and have an output frequency no less than 20 kHz	____	_XX_	____
150(k)1: HIGH EFFICACY LUMINAIRES - OUTDOOR HID: contain only high efficacy lamps as outlined in Table 150-C, luminaire has factory installed HID ballast	____	_XX_	____
150(k)2: Permanently installed luminaires in kitchens shall be high efficacy luminaires. Up to 50 percent of the wattage, as determined in Sec. 130(c), of permanently installed luminaires in kitchens may be in luminaires that are not high efficacy luminaires, provided that these luminaires are controlled by switches separate from those controlling the high efficacy luminaires	____	_XX_	____
150(k)3: Permanently installed luminaires in bathrooms, garages, laundry rooms, utility rooms shall be high efficacy luminaires OR are controlled by an occupant			

11.

MANDATORY MEASURES CHECKLIST: RESIDENTIAL MF-1R Page 4
Project Title.......... HOFFMAN-CASTLEMAN RESID. Date..09/04/08 11:28:24

	n/a	De-sign-er	En-force-ment
sensor(s) certified to comply with Section 119(d) that does not turn on automatically or have an always on option	____	_XX_	____
150(k)4: Permanently installed luminaires located other than in kitchens, bathrooms, garages, laundry rooms, and utility rooms shall be high efficacy luminaires (except closets less than 70 ft2), OR are controlled by a dimmer switch OR are controlled by an occupant sensor(s) that complies with Section 119(d) that does not turn on automatically or have an always on option	____	_XX_	____
150(k)5: Luminaires that are recessed into insulated ceilings are approved for zero clearance insulation cover (IC) and are certified air tight to ASTM E283 and labeled as air tight (AT) to less than 2.0 CFM at 75 Pascals	____	_XX_	____
150(k)6: Luminaires providing outdoor lighting and permanently mounted to a residential building or to other buildings on the same lot shall be high efficacy luminaires (not including lighting around swimming pools/water features or other Article 680 locations) OR are controlled by occupant sensors with integral photo control certified to comply with Section 119(d)	____	_XX_	____
150(k)7: Lighting for parking lots for 8 or more vehicles shall have lighting that complies with Sec. 130, 132, and 147. Lighting for parking garages for 8 or more vehicles shall have lighting that complies with Sec. 130, 131, and 146	_XX_	____	____
150(k)8: Permanently installed lighting in the enclosed, non-dwelling spaces of low-rise residential buildings with four or more dwelling units shall be high efficacy luminaires OR are controlled by an occupant sensor(s) certified to comply with Section 119(d)	_XX_	____	____

12.

RESIDENTIAL KITCHEN LIGHTING WORKSHEET WS-5R Page 1

Project Title.......... HOFFMAN-CASTLEMAN RESID. Date..09/04/08 11:28:24

MICROPAS7 v7.30 File-72F Wth-CTZ06S05 Program-FORM MF-1R
User#-MP0174 User-Group DeVille Run-PROPOSED DESIGN

At least 50% of the total rated wattage of permanently installed luminaires in the kitchen must be in luminaires that are high efficacy luminaires as defined in Table 150-C. Luminaires that are not high efficacy must be switched separately.

KITCHEN LIGHTING SCHEDULE

Luminaire Type	High Efficacy (Yes/No)	Watts		Quantity		High Efficacy Watts		Other Watts
______	___	___	x	___	=	___	or	___
______	___	___	x	___	=	___	or	___
______	___	___	x	___	=	___	or	___
______	___	___	x	___	=	___	or	___
______	___	___	x	___	=	___	or	___
				Total A=		___	B=	___

Complies if A >= B Yes ______ No ______

Rules for Determining Residential Kitchen Luminaire Wattage

Screw Base Sockets - Section 130(c) 1
(Not containing permanently installed ballasts) The maximum relamping rated wattage of the luminaire, as listed on a permanent factory-installed label (luminaire wattage is not based on type or wattage of lamp that is used).
Permanently or Remotely Installed Ballasts - Section 130(c) 2
The operating input wattage of the rated lamp/ballast combination based on values published in manufacturer's catalogs based on independent testing lab reports.
Line Voltage Track Lighting (90 through 480 volts) - Section 130(c) 3
1. Volt-ampere (VA) rating of the branch circuit(s) feeding the tracks; or
2. For tracks equipped with an integral current limiter, the higher of
- The wattage (or VA) rating of an approved integral current limiter controlling the track system or
- 15 watts per linear foot of the track; or
3. For tracks without an integral current limiter, the higher of
- 45 watts per linear foot of the track or
- The total wattage of all of the luminaires included in the system.
Low Voltage Track Lighting (less than 90 volts) - Section 130(c) 4
Rated wattage of the transformer feeding the system, as shown on a permanent factory-installed label
Other Lighting - Section 130(c) 5
(Lighting systems that are not addressed in Sections 130 (c) 1-4) The maximum rated wattage, or operating input wattage of the system, listed on a permanent factory installed label, or published in manufacturer's catalogs, based on independent testing lab reports.

13.

HVAC SIZING HVAC Page 1

Project Title.......... HOFFMAN-CASTLEMAN RESID. Date..09/04/08 11:28:24
Project Address........ 1445 El Bosque Ct. *******
Pacific Palisades, Calif.*v7.30*
Documentation Author... DOUGLASS C. TABER *******
Group DeVille
1097 Suffolk St.
Cambria, CA 93428
800.995.5662
Climate Zone........... 06
Compliance Method...... MICROPAS7 v7.30 for 2005 Standards by Enercomp, Inc.

Building Permit #
Plan Check / Date
Field Check/ Date

MICROPAS7 v7.30 File-72F Wth-CTZ06S05 Program-HVAC SIZING
User#-MP0174 User-Group DeVille Run-PROPOSED DESIGN

GENERAL INFORMATION

Floor Area................ 8393.8 sf
Volume.................... 110811 cf
Front Orientation......... Front Facing 155 deg (SE)
Sizing Location........... MALIBU MTNS.
Latitude.................. 34.1 degrees
Winter Outside Design...... 33 F
Winter Inside Design....... 70 F
Summer Outside Design...... 90 F
Summer Inside Design....... 75 F
Summer Range.............. 21 F
Interior Shading Used...... Yes
Exterior Shading Used...... Yes
Overhang Shading Used...... Yes
Latent Load Fraction....... 0.16

HEATING AND COOLING LOAD SUMMARY

Description	Heating (Btu/hr)	Cooling (Btu/hr)
Opaque Conduction and Solar......	40937	11009
Glazing Conduction and Solar.....	122380	163344
Infiltration.....................	32269	7493
Internal Gain....................	n/a	6200
Ducts............................	40326	36106
Sensible Load....................	235912	224152
Latent Load......................	n/a	36133
Minimum Total Load	235912	260285

Note: The loads shown are only one of the criteria affecting the selection of HVAC equipment. Other relevant design factors such as air flow requirements, outside air, outdoor design temperatures, coil sizing, availability of equipment, oversizing safety margin, etc., must also be considered. It is the HVAC designer's responsibility to consider all factors when selecting the HVAC equipment.

14.

STEVEN EHRLICH
Architects

10865 WASHINGTON BLVD.
CULVER CITY, 90232.3600
TEL 310.838.9700
FAX 310.838.9737
WWW.S-EHRLICH.COM

PROJECT

Hoffman Castleman Residence

1445 El Bosque Ct, Pacific Palisades, CA

CONSULTANTS

NO.	DATE	REVISION

THIS DRAWING AND THE DESIGNS, ARRANGEMENTS, DEPICTIONS, IDEAS AND OTHER INFORMATION CONTAINED HEREIN CONSTITUTE UNPUBLISHED WORK OF STEVEN EHRLICH ARCHITECTS AND SHALL REMAIN PROPERTY OF STEVEN EHRLICH ARCHITECTS IN PERPETUITY. NO PART THEREOF SHALL BE REPRODUCED, COPIED, DISCLOSED, DISTRIBUTED, SOLD, PUBLISHED OR OTHERWISE USED IN ANYWAY WITHOUT THE ADVANCED EXPRESS WRITTEN CONSENT OF STEVEN EHRLICH ARCHITECTS. VISUAL CONTACT WITH THE ABOVE DRAWINGS, OR ANY PART THEREOF, SHALL CONSTITUE CONCLUSIVE EVIDENCE OF ACCEPTANCE OF THESE RESTRICTIONS.

SHEET TITLE

Title 24 Report

DRAWN: Author
SCALE:
STATUS: Back Check
DATE: 04-28-10
FILE: S:\Nmarble\Hoffman\Hoffman Central Print.rvt
JOB: 491

SHEET NUMBER:

A0.03

BOARD OF BUILDING AND SAFETY COMMISSIONERS
EFREN ABRATIQUE, P.E. PRESIDENT
JAVIER NUÑEZ VICE-PRESIDENT
PEDRO BIRBA
MARSHA L. BROWN
WILLIAM J. ROUSE

CITY OF LOS ANGELES
CALIFORNIA

ANTONIO R. VILLARAIGOSA
MAYOR

DEPARTMENT OF BUILDING AND SAFETY
201 NORTH FIGUEROA STREET
LOS ANGELES, CA 90012
ANDREW A. ADELMAN, P.E.
GENERAL MANAGER
RAYMOND CHAN
EXECUTIVE OFFICER

GEOLOGY AND SOILS REPORT APPROVAL LETTER

January 6, 2006

Log # 50384-01
SOILS/GEOLOGY FILE - 2
LAN-EXEMPT

Neal Castleman / Ellen Hoffman
19124 Pacific Coast Highway
Malibu, CA 90265

TRACT: 41709
LOT: 15
LOCATION: 1445 N El Bosque Court

CURRENT REFERENCE REPORT/LETTER(S)	REPORT NO.	DATE(S) OF DOCUMENT	PREPARED BY
Response Letter	WO 5761	10/21/2005	GeoSoils Consultants, Inc.

PREVIOUS REFERENCE REPORT/LETTER(S)	REPORT NO.	DATE(S) OF DOCUMENT	PREPARED BY
Dept. Correction Letter	50384	10/13/2005	LADBS
Soils Report	WO 5761	08/31/2005	GeoSoils Consultants, Inc.
Dept. Approval Letter	48663	08/03/2005	LADBS

The referenced report and response letter providing recommendations for a proposed development have been reviewed by the Grading Division of the Department of Building and Safety. According to the report, the project will consist of a two-story steel frame and glass residential structure to be constructed within the northern portion of the site. Additionally, a single-story garage and outbuilding structure is proposed within the mid-portion of the site. The proposed structures will be constructed near the present grade. The subject site was graded in conjunction with the grading of the balance of Tract 41709 during 1981 through 1984. The residential building pad area was created through fill placement, with a maximum fill depth of 20 feet. A localized, loose fill condition exists on an ascending slope within the mid-portion of the lot and north of the proposed garage building. It is proposed to trim the fill from the slope.

It is recommended to support the proposed structures on conventional foundations bearing on certified fill a minimum of 3 feet in thickness. In addition, to comply with descending slopes setback requirements drilled piles extended into the underlying fill or bedrock are recommended. Foundations shall bear entirely on compacted fill or bedrock.

The site is not located within the liquefaction zone as shown on the "Seismic Hazard Zones" map issued by the State of California, and liquefaction study is not required. This satisfies the requirement

AN EQUAL EMPLOYMENT OPPORTUNITY – AFFIRMATIVE ACTION EMPLOYER

of the State of California Public Resources Code, Section 2690 et seq. (Seismic Hazard Mapping Act).

The report is acceptable, provided the following conditions are complied with during site development:

(Note: Numbers in parenthesis ( ) refer to applicable sections of the 2002 City of LA Building Code. P/BC numbers refer the applicable Information Bulletin. Information Bulletins can be accessed on the internet at LADBS.ORG.)

1. All footings shall be founded entirely in certified fill a minimum of 3 feet thick below the bottom of footings, or the structures shall be supported entirely on a foundation system extended into bedrock.
2. The geologist and soils engineer shall review and approve the detailed plans prior to issuance of any permits. This approval shall be by signature on the plans which clearly indicates that the geologist and soils engineer have reviewed the plans prepared by the design engineer and that the plans include the recommendations contained in their reports.
3. No retaining walls or excavations shall be made into the ascending slope, as recommended
4. Loose fill shall be trimmed from the slope above the building pad/driveway under the direction of the geologist and soil engineer, as recommended.
5. All recommendations of the reports which are in addition to or more restrictive than the conditions contained herein shall be incorporated into the plans.
6. A copy of the subject and appropriate referenced reports and this approval letter shall be attached to the District Office and field set of plans. Submit one copy of the above reports to the Building Department Plan Checker prior to issuance of the permit. (7006.1)
7. All man-made fill shall be compacted to a minimum 90 percent of the maximum dry density of the fill material per the latest version of ASTM D 1557. Where cohesionless soil having less than 15 percent finer than 0.005 millimeters is used for fill, it shall be compacted to a minimum of 95 percent relative compaction based on maximum dry density (D1556). Placement of gravel in lieu of compacted fill is allowed only if complying with Section 91.7011.3 of the Code.(7011.3)
8. If import soils are used, no footings shall be poured until the soils engineer has submitted a compaction report containing in-place shear test data and settlement data to the Grading Division of the Department, and obtained approval. (7008.2)
9. Compacted fill shall extend beyond the footings a minimum distance equal to the depth of the fill below the bottom of footings or a minimum of five feet whichever is greater. (1806.1)
10. Existing uncertified fill shall not be used for support of footings, concrete slabs or new fill (7011.3 & 1806.1)
11. Footings supported on approved compacted fill or expansive soil shall be reinforced with a minimum of four (4) ½-inch diameter (#4) deformed reinforcing bars. Two (2) bars shall be

placed near the bottom and two (2) bars placed near the top.

12. If the actual foundation design loads do not conform to the foundation loads assumed in the report, the soil engineer shall submit a supplementary report containing specific design recommendations for the heavier loads to the Department for review and approval prior to issuance of a permit.
13. All new graded slopes shall be no steeper than 2:1.
14. All graded, brushed or bare slopes shall be planted.
15. The applicant is advised that the approval of this report does not waive the requirements for excavations contained in the State Construction Safety Orders enforced by the State Division of Industrial Safety. (3301.1)
16. Unsurcharged temporary excavation may be cut vertically up to 5 feet. Excavations exceeding 5 feet shall be trimmed back at a gradient not exceeding 1:1 (horizontal to vertical), as recommended.
17. Footings adjacent to a descending slope steeper than 3:1 in gradient shall be a minimum distance of one-third the vertical height of the slope but need not exceed 40 feet measured horizontally from the footing bottom to the face of the slope. (1806.5.3)
18. Buildings adjacent to ascending slopes shall be set back from the toe of the slope a level distance equal to one half the vertical height of the slope, but need not exceed 15 feet in accordance with Code Section 1806.5.2.
19. All footings shall extend below a 1:1 plane projected upward from the base of the approved compacted fill. (1806.1)
20. Pile caisson and/or isolated foundation ties are required by Code Section 91.1807.2. Exceptions and modification to this requirement are provided in Information Bulletin P/BC2002-30.
21. The design passive pressure shall be neglected for a portion of the pile with a set back distance (horizontal set back) less than five feet from fill, soil or landslide contact plane with bedrock.
22. Slabs placed on approved compacted fill shall be at least 3½ inches thick and shall be reinforced with ½-inch diameter (#4) reinforcing bars spaced maximum of 16 inches on center each way.
23. Concrete floor slabs placed on expansive soil shall be placed on a 4-inch fill of coarse aggregate or on a moisture barrier membrane. The slabs shall be at least 3½ inches thick and shall be reinforced with ½-inch diameter (#4) reinforcing bars spaced maximum of 16 inches on center each way.
24. The LABC Soil Type underlying the site is S_D. The minimum horizontal distance to known seismic sources shall be in accordance with the "Maps of Known Active Fault Near Source Zones" published by ICBO. (1636A)

25. Cantilevered and restrained retaining walls shall be designed for minimum EFP's as specified on the tables presented on pages 12 and 13 of the report dated 08/31/05.
26. The recommended equivalent fluid pressure (EFP) for the proposed retaining wall shall apply from the top of the freeboard to the bottom of the wall footing.
27. All retaining walls shall be provided with a standard surface backdrain system and all drainage shall be conducted to the street in an acceptable manner and in a non-erosive device. (7013.11)
28. All retaining walls shall be provided with a subdrain system to prevent possible hydrostatic pressure behind the wall. Prior to issuance of any permit, the retaining wall subdrain system recommended in the soil report shall be incorporated into the foundation plan which shall be reviewed and approved by the soils engineer of record.(7015.5 & 108.9)
29. Installation of the subdrain system shall be inspected and approved by the soils engineer of record and the City grading/building inspector. (7015.5 & 108.9)
30. Prefabricated drainage composites (Miradrain) (Geotextiles) may be only used in addition to traditionally accepted methods of draining retained earth.
31. The dwelling shall be connected to the public sewer system. (P.BC 2001-27)
32. All roof and pad drainage shall be conducted to the street in an acceptable manner. (7013.10)
33. The geologist and soil engineer shall inspect all excavations to determine that conditions anticipated in the report have been encountered and to provide recommendations for the correction of hazards found during grading. (7008.3)
34. All friction pile or caisson drilling and installation shall be performed under the inspection and approval of the soils engineer. (1807.1)
35. Prior to the pouring of concrete, a representative of the consulting soils engineer shall inspect and approve the footing excavations. He shall post a notice on the job site for the LADBS Building Inspector and the Contractor stating that the work so inspected meets the conditions of the report, but that no concrete shall be poured until the City Building Inspector has also inspected and approved the footing excavations. A written certification to this effect shall be filed with the Grading Division of the Department upon completion of the work. (108.9 & 7008.2)
36. Prior to the placing of compacted fill, a representative of the consulting soils engineer shall inspect and approve the bottom excavations. He shall post a notice on the job site for the LADBS Grading Inspector and the Contractor stating that the soil inspected meets the conditions of the report, but that no fill shall be placed until the LADBS Grading Inspector has also inspected and approved the bottom excavations. A written certification to this effect shall be filed in the final compaction report filed with the Grading Engineering Division of the Department. All fill shall be placed under the inspection and approval of the soils engineer. A compaction report together with the approved soil report and Department approval letter shall be submitted to the Grading Engineering Division of the Department upon completion

of the compaction. The engineer's certificate of compliance shall include the grading permit number and the legal description as described in the permit (7011.3).

37. No footing/slab shall be poured until the compaction report is submitted and approved by the Grading Division of the Department.

DANA PREVOST
Engineering Geologist III

J. ADOLFO ACOSTA
Geotechnical Engineer I

DP/JAA:dp/jaa
50384-01
(213) 482-0480

cc: Geosoils Consultants, Inc
WLA District Office

JANUARY 6, 2006 SOILS REPORT APPROVAL LETTER

BOARD OF BUILDING AND SAFETY COMMISSIONERS
MARSHA L. BROWN PRESIDENT
VAN AMBATIELOS VICE-PRESIDENT
VICTOR H. CUEVAS
HELENA JUBANY
ELENORE A. WILLIAMS

CITY OF LOS ANGELES
CALIFORNIA

ANTONIO R. VILLARAIGOSA
MAYOR

DEPARTMENT OF BUILDING AND SAFETY
201 NORTH FIGUEROA STREET
LOS ANGELES, CA 90012
ANDREW A. ADELMAN, P.E.
GENERAL MANAGER
RAYMOND CHAN
EXECUTIVE OFFICER

SOILS REPORT APPROVAL LETTER

August 1, 2008

LOG # 64023
SOILS/GEOLOGY FILE - 2

Neal Castleman
10865 Washington Boulevard
Culver City, CA 90232

TRACT: 41709
LOT: 15
LOCATION: 1445 N El Bosque Court

CURRENT REFERENCE REPORT/LETTER(S)	REPORT NO.	DATE(S) OF DOCUMENT	PREPARED BY
Response Letter	WO 5761	06/09/2008	GeoSoils Consultants, Inc.

PREVIOUS REFERENCE REPORT/LETTER(S)	REPORT NO.	DATE(S) OF DOCUMENT	PREPARED BY
Dept. Approval Letter	50384-01	01/06/2006	LADBS
Response Letter	WO 5761	10/21/2005	GeoSoils Consultants, Inc.
Dept. Correction Letter	50384	10/13/2005	LADBS
Soils Report	WO 5761	08/31/2005	GeoSoils Consultants, Inc.
Dept. Approval Letter	48663	08/03/2005	LADBS

The referenced current report providing recommendations regarding on-site storm water infiltration systems at the subject site has been reviewed by the Grading Division of the Department of Building and Safety. The Department previously conditionally approved the referenced 08/31/2005 report and 10/21/2005 response letter for a proposed two-story steel frame and glass residential structure to be constructed within the northern portion of the site, and a single-story garage and outbuilding structure proposed within the mid-portion of the site.

The subject site was graded in conjunction with the grading of the balance of Tract 41709 during 1981 through 1984. The residential building pad area was created through fill placement, with a maximum fill depth of 20 feet. A localized, loose fill condition exists on an ascending slope within the mid-portion of the lot and north of the proposed garage building. It is proposed to trim the fill from the slope.

The consultants state that infiltration of water into the underlying materials may have adverse effects on the proposed development and descending slope areas.

LADBS G-5 (Rev.6/08) AN EQUAL EMPLOYMENT OPPORTUNITY - AFFIRMATIVE ACTION EMPLOYER

The current report is acceptable, provided the following conditions are complied with during site development:

1. All conditions of the above referenced Department approval letter shall apply.
2. All recommendations of the current report which are in addition to or more restrictive than the conditions contained herein shall be incorporated into the plans.
3. Implementation of an on-site storm water infiltration system at the subject site system is not acceptable, as recommended.

J. ADOLFO ACOSTA
Geotechnical Engineer I

JAA/jaa
Log No. 64023
(213) 482-0480

cc: GeoSystems, Inc.
Applicant
WL District Office

AUGUST 1, 2008 SOILS REPORT APPROVAL LETTER

BOARD OF BUILDING AND SAFETY COMMISSIONERS
MARSHA L. BROWN PRESIDENT
VAN AMBATIELOS VICE-PRESIDENT
VICTOR H. CUEVAS
HELENA JUBANY
ELENORE A. WILLIAMS

CITY OF LOS ANGELES
CALIFORNIA

ANTONIO R. VILLARAIGOSA
MAYOR

DEPARTMENT OF BUILDING AND SAFETY
201 NORTH FIGUEROA STREET
LOS ANGELES, CA 90012
ANDREW A. ADELMAN, P.E.
GENERAL MANAGER
RAYMOND CHAN
EXECUTIVE OFFICER

SOILS REPORT APPROVAL LETTER

September 11, 2008

LOG # 64432
SOILS/GEOLOGY FILE - 2

Neal Castleman
10865 Washington Boulevard
Culver City, CA 90232

TRACT: 41709
LOT: 15
LOCATION: 1445 N El Bosque Court

CURRENT REFERENCE REPORT/LETTER(S)	REPORT NO.	DATE(S) OF DOCUMENT	PREPARED BY
Update Report	WO 5761	01/31/2008	GeoSoils Consultants, Inc.
Oversized Docs.	"	"	"

PREVIOUS REFERENCE REPORT/LETTER(S)	REPORT NO.	DATE(S) OF DOCUMENT	PREPARED BY
Dept. Approval Letter	64023	08/01/2008	LADBS
Soils Report	WO 5761	06/09/2008	GeoSoils Consultants, Inc.
Dept. Approval Letter	50384-01	01/06/2006	LADBS
Response Letter	WO 5761	10/21/2005	GeoSoils Consultants, Inc.
Dept. Correction Letter	50384	10/13/2005	LADBS
Soils Report	WO 5761	08/31/2005	GeoSoils Consultants, Inc.
Dept. Approval Letter	48663	08/03/2005	LADBS

The Grading Division of the Department of Building and Safety has reviewed the referenced update report concerning a proposed 2-story residential building.

The Department previously conditionally approved the referenced 08/31/2005 report and 10/21/2005 response letter for a proposed two-story steel frame and glass residential structure to be constructed within the northern portion of the site, and a single-story garage and outbuilding structure proposed within the mid-portion of the site.

The Department previously conditionally approved the referenced 06/09/2008 report concerning the feasibility of on-site storm water infiltration systems at the subject site.

According to the update report, the location of the main house has been moved form a previously

LADBS G-5 (Rev.7/08) AN EQUAL EMPLOYMENT OPPORTUNITY - AFFIRMATIVE ACTION EMPLOYER

proposed diagonal setting near center portion of the graded building pad, to a more east/west orientation along the top of the graded, 2:1 (H:V) fill slope descending from the north side of the pad. A hardscape patio is proposed along the north side of the proposed house. A portion of this patio is anticipated to extend onto the descending, graded 2:1 fill slope, utilizing a proposed retaining wall as support.

As of January 1, 2008 the City of Los Angeles was required to adopt the new 2007 California Building Code. The new code contains several new provisions including revised seismic design requirements. These requirements apply to all projects where the permit application submittal date is after January 1, 2008.

The current update report is acceptable, provided the following conditions are complied with during site development:

1. All conditions of the above referenced Department letters shall apply, except as specifically modified herein.
2. The LABC Soil Type (Site Class) underlying the site is S_D (D), and the minimum horizontal distance to known seismic sources shall be in accordance with "Maps of Known Active Fault Near Source Zones" published by ICBO, except if the permit application submittal date is after January 1, 2008, seismic Design of the building shall be done in accordance with the current requirements in the 2008 Los Angeles Building Code.
3. Final plans shall comply with the hillside retaining wall Ordinance No. 176, 445, regarding the number and heights of retaining walls allowed.

J. ADOLFO ACOSTA
Geotechnical Engineer I

JAA/jaa
Log No. 64432
(213) 482-0480

cc: GeoSoils Consultants, Inc.
Applicant
WLA District Office

SEPTEMBER 11, 2008 SOILS REPORT APPROVAL LETTER

Edit | Cancel | Print | Home

City of Los Angeles - Department of Building and Safety
GRADING PRE-INSPECTION REPORT

Address: **1445 N El Bosque Ct (90272)**
CD: **11** Log No.: **LA10435** Permit Application: **08010-10000-00867**

Inspector, Office, Phone:*	**Kyle Payne, West L.A. , 310 914-3937**	Property Posted:	Posting Date:
Grading District:	**STGRDW14**	**Yes**	**06/04/2008**
		GPI Fees Paid:	Posting Fees Paid:
Inspection Date:	**06/04/2008**	**Yes**	**Yes**
Inspection Status:*	**Complete** as of **06/05/2008**	Revised by	on
Purpose:	**NEW SINGLE FAMILY RESIDENCE ON VACANT LOT**		

TRACT: **TR 41709**
BLOCK: **N/A** LOT(S): **15** ARB: COUNTY REF. NO.: **M P 1003-21/26**

INSPECTORS REPORT OF FIELD CONDITIONS

Approved Graded Lot: **Yes**	Bearing Value: **Table 18.1.A**
Fill over 100 feet: **Yes**	Buttress Fill: **Yes**
Slope of Surface: **Ascending**	Natural Soil Classification Per Table 1804.2
Cut: **18°** Height: **20** ft	**silty sand**
Fill: ° Height: ft	Expansive Soil: **Yes**
Natural: **3°** Height: **3** ft	Slide Area: **No**
Sewer Available: **Yes**	PSDS Sized Per Code: **N/A**
Site **Above** Street	Roof Gutters: **Yes**
Condition of Street for Drainage Purposes **A/C**	Recommended Termination of Drainage **to street**
Driveway Grade: % **Existing**	Maximum Rough Grade Allowed: %

GRADING APPROVAL TO ISSUE PERMIT(S)
OK TO ISSUE. SEE BELOW FOR COMMENTS.
X DO NOT ISSUE UNTIL BELOW REQUIREMENTS HAVE BEEN SATISFIED.

CONDITIONS & REQUIREMENTS PRECEDENT TO ISSUING PERMIT

1. A grading permit is required for **excavation and backfill**.
2. A retaining wall permit is required. .
3. OSHA permit required for **vertical cuts 5 feet or over.**.
X 4. All footings shall be founded in undisturbed natural soil per Code.
X 5. Comply with the provisions of Section 91.1805.8 for expansive soil conditions.
X 6. In the event excavations reveal unfavorable conditions, the services of a soils engineer and/or geologist may be required.
X 7. **Geological and Soils** report(s) are required. Submit three copies (1 original and 2 copies), with appropriate fees, to the Grading Section for review and approval.
X 8. Incorporate all recommendations of the approved **Geological and Soils** report(s) and Department letters dated **to come** into the plans. **Geologist and Soils Engineer** to sign plans.
9. Site is subject to mudflow. Comply with provisions of Section 91.7014.3.
10. Buildings shall be located clear of the toe of all slopes which exceed a gradient of 3 horizontal to 1 vertical as per Section 91.1805.3.1.
11. Footings shall be set back from the descending slope surface exceeding 3 horizontal to 1 vertical as

per Section 91.1805.3.2.
12. Swimming pools and spas shall be set back from descending and ascending slopes as per Section 91.1805.3.3.
13. Department approval is required for construction of on or over slopes steeper than 2 horizontal to 1 vertical.
14. Provide complete details of engineered temporary shoring or slot cutting procedures on plans. Call for inspection before excavation begins.
X 15. All concentrated drainage, including roof water, shall be conducted, via gravity, to the street or an approved location at a 2% minimum. Drainage to be shown on the plans.
X 16. A Registered Deputy Inspector is required for **cassion**.
X 17. All fill or backfill shall be compacted by mechanical means to a minimum 90% relative compaction as determined by ASTM method D-1557. Subdrains shall be provided where required by Code.
X 18. Specify on the plans: "The soils engineer is to approve the key or bottom and leave a certificate on the site for the grading inspector. The grading inspector is to be notified before any grading begins and, for bottom inspection, before fill is placed. Fill may not be placed without approval of the grading inspector."
19. Existing non-conforming slopes shall be cut back at 2:1 (26°) or retained.
20. All cut or fill slopes shall be no steeper the 2:1 (26°).
X 21. Stake and flag the property lines in accordance with a licensed survey map.
22. Approval required by the Department of for .

ADDITIONAL REQUIREMENTS
This GPI shall be part of the approved plans.

GRADING PREINSPECTION

STEVEN EHRLICH
Architects

10865 WASHINGTON BLVD.
CULVER CITY, 90232.3600
TEL 310.838.9700
FAX 310.838.9737
WWW.S-EHRLICH.COM

PROJECT

Hoffman Castleman Residence
1445 El Bosque Ct, Pacific Palisades, CA

CONSULTANTS

NO. DATE REVISION

THIS DRAWING AND THE DESIGNS, ARRANGEMENTS, DEPICTIONS, IDEAS AND OTHER INFORMATION CONTAINED HEREIN CONSTITUTE UNPUBLISHED WORK OF STEVEN EHRLICH ARCHITECTS AND SHALL REMAIN PROPERTY OF STEVEN EHRLICH ARCHITECTS IN PERPETUITY. NO PART THEREOF SHALL BE REPRODUCED, COPIED, DISCLOSED, DISTRIBUTED, SOLD, PUBLISHED OR OTHERWISE USED IN ANYWAY WITHOUT THE ADVANCED EXPRESS WRITTEN CONSENT OF STEVEN EHRLICH ARCHITECTS. VISUAL CONTACT WITH THE ABOVE DRAWINGS, OR ANY PART THEREOF, SHALL CONSTITUE CONCLUSIVE EVIDENCE OF ACCEPTANCE OF THESE RESTRICTIONS.

SHEET TITLE

Approvals

DRAWN: Author
SCALE:
STATUS: Back Check
DATE: 04-28-10
FILE: S:\Nmarble\Hoffman\Hoffman Central Print.rvt
JOB: 491
SHEET NUMBER:

A0.04

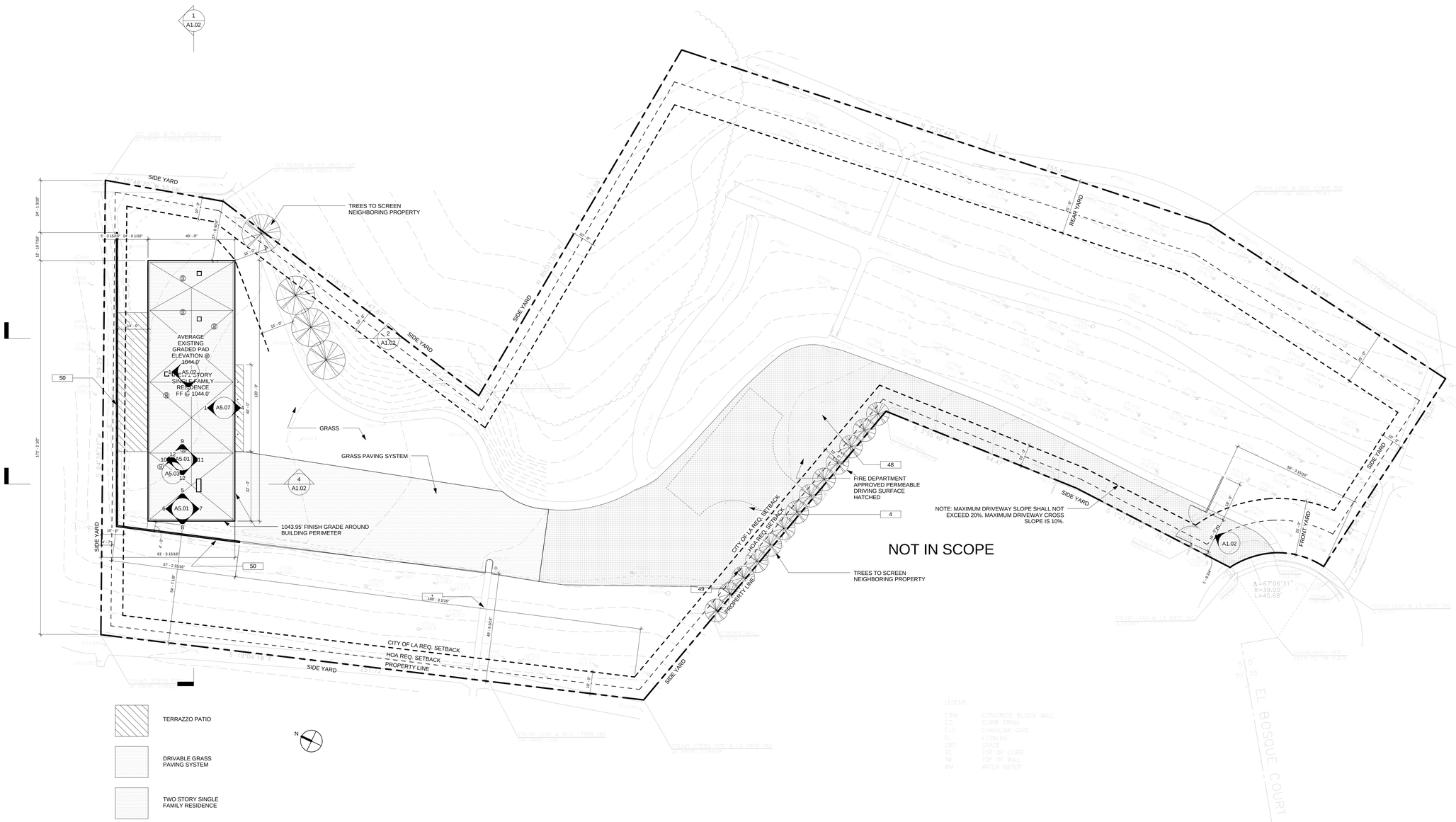

GENERAL NOTES:

SETBACK DIMENSIONS LISTED ON THIS DRAWING ARE THE MINIMUM SETBACKS REQUIRED BY THE CITY OF LOS ANGELES
SIDE YARD: 10'-0"
FRONT YARD: 25'-0"
REAR YARD: 25'-0"

HOME OWNERS ASSOCIATION SETBACKS ARE AS FOLLOWS:
SIDE YARD: 4'-7" (10% OF FRONTAGE)
FRONT YARD: 15'-0"
REAR YARD: 15'-0"

1 Site Plan
1" = 20'-0"

1	(E) FLOW LINE / CONCRETE CULVERT
2	(N) TREE
4	FIRE TRUCK TURNAROUND
7	BUILT IN STORAGE SHELVING
8	TERRAZZO FLOORING
9	METAL FRAME PER STRUCTURAL, FINISH TO MATCH WHITE EXTERIOR METAL PANEL OF BUILDING
10	KITCHEN BY OTHERS
11	CASEWORK
12	KITCHEN ISLAND PER KITCHEN DRAWINGS
14	TELEVISION BY OWNER
15	GAS FIREPLACE
18	WATER HEATER
19	SHOWER BENCH
20	CLEAR GLASS RAIL (42")
21	ELEVATOR MECHANICAL EQUIPMENT
22	JACUZZI BATHTUB
28	GYPSUM WALL BOARD
30	DEHUMIDIFIER IN CLOSET
31	EXPOSED STEEL COLUMN PER STRUCTURAL, PAINTED (TYP.)
32	SINGLE GLAZED TEMPERED SLIDING DOOR SYSTEM, FLEETWOOD OR EQUAL
33	OPERABLE SKYLIGHT - W/ 4" CURB ABOVE ROOF
34	ROOF DRAIN TYP.
35	WALL SAFE
36	1 HOUR RATED WALL
37	METAL PANEL CLADDING SYSTEM KYNAR PAINTED WHITE
38	CURTAIN WALL, SEE CURTAIN WALL SCHEDULE
39	JOINT OF METAL PANEL SYSTEM, TYP
40	DOOR, SEE DOOR SCHEDULE
42	FLIP UP GARAGE DOOR CLAD IN METAL PANEL SYSTEM SIM. TO EXTERIOR OF BUILDING
43	1/2" BASE REVEAL
45	CLOSET-POLE AND SHELF
46	BATHTUB
47	PREWIRE FOR FUTURE PHOTOVOLTAIC PANELS
48	PERMEABLE GRASS PAVING SYSTEM
49	(N) FIRE HYDRANT
50	(N) CONCRETE RETAINING WALL
54	ART WALL
55	SLIDING DOOR POCKET
56	KNEESPACE BELOW
57	FILE CABINETS BELOW, LATERAL LEGAL
58	SHELVING, EUROCONCEPTS AIKO OR EQUAL
59	ROLLING TABLE BY OWNER
60	4" THICK ART DISPLAY LEDGE / HEARTH, CAESARSTONE "CONCRETE"
61	ELECTRICAL SUB PANEL, SEE ELECTRICAL DRAWINGS
63	TELEPHONE / SECURITY / LIGHTING CONTROL PANELS
66	ELECTRICAL OUTLET - SEE ELECTRICAL DRAWINGS
67	METAL REGLET IN TERRAZZO FLOORING
68	ROOFTOP MECHANICAL EQUIPMENT PER MECHANICAL DRAWINGS
69	YELLOW GLASS
71	MOTORIZED ROLL DOWN SHADE
72	GLASS
73	TILE
74	BACKLIT MIRROR HELD OFF OF WALL BEHIND
75	ELECTRICAL EQUIPMENT - SEE ELECTRICAL DRAWINGS
76	RED GLASS
77	RETURN AIR LINEAR DIFFUSER - SEE MECHANICAL DRAWINGS
78	LIGHTING CONTROL KEYPAD - SEE ELECTRICAL DRAWINGS
80	DOOR - ELECTIRCALLY OPERATED - SEE DOOR SCHEDULE
81	LAMINATE COUNTERTOP
82	LIGHTING FIXTURE, SEE LIGHTING DRAWINGS FOR TYPE
83	MECHANICAL REGISTER, SEE MECHANICAL DRAWINGS FOR TYPE
C-4	CASEWORK- MSTR BDRM
C-7	CASEWORK- ART STORAGE
C-8	CASEWORK- LIVING ROOM
CONC	EXPOSED CONCRETE, SEALED
P	PAINT
S-1	TERRAZZO
S-2	CAESARSTONE - CONCRETE

STEVEN EHRLICH Architects
10865 WASHINGTON BLVD.
CULVER CITY, 90232.3600
TEL 310.838.9700
FAX 310.838.9737
WWW.S-EHRLICH.COM

PROJECT

Hoffman Castleman Residence

1445 El Bosque Ct, Pacific Palisades, CA

CONSULTANTS

NO.	DATE	REVISION

THIS DRAWING AND THE DESIGNS, ARRANGEMENTS, DEPICTIONS, IDEAS AND OTHER INFORMATION CONTAINED HEREIN CONSTITUTE UNPUBLISHED WORK OF STEVEN EHRLICH ARCHITECTS AND SHALL REMAIN PROPERTY OF STEVEN EHRLICH ARCHITECTS IN PERPETUITY. NO PART THEREOF SHALL BE REPRODUCED, COPIED, DISCLOSED, DISTRIBUTED, SOLD, PUBLISHED OR OTHERWISE USED IN ANYWAY WITHOUT THE ADVANCED EXPRESS WRITTEN CONSENT OF STEVEN EHRLICH ARCHITECTS. VISUAL CONTACT WITH THE ABOVE DRAWINGS, OR ANY PART THEREOF, SHALL CONSTITUE CONCLUSIVE EVIDENCE OF ACCEPTANCE OF THESE RESTRICTIONS.

SHEET TITLE

Site / Lanscape Plan

DRAWN:	NM
SCALE:	1" = 20'-0"
STATUS:	Back Check
DATE:	04-28-10
FILE:	S:\Nmarble\Hoffman\Hoffman Central Print.rvt
JOB:	491

SHEET NUMBER:

A1.01

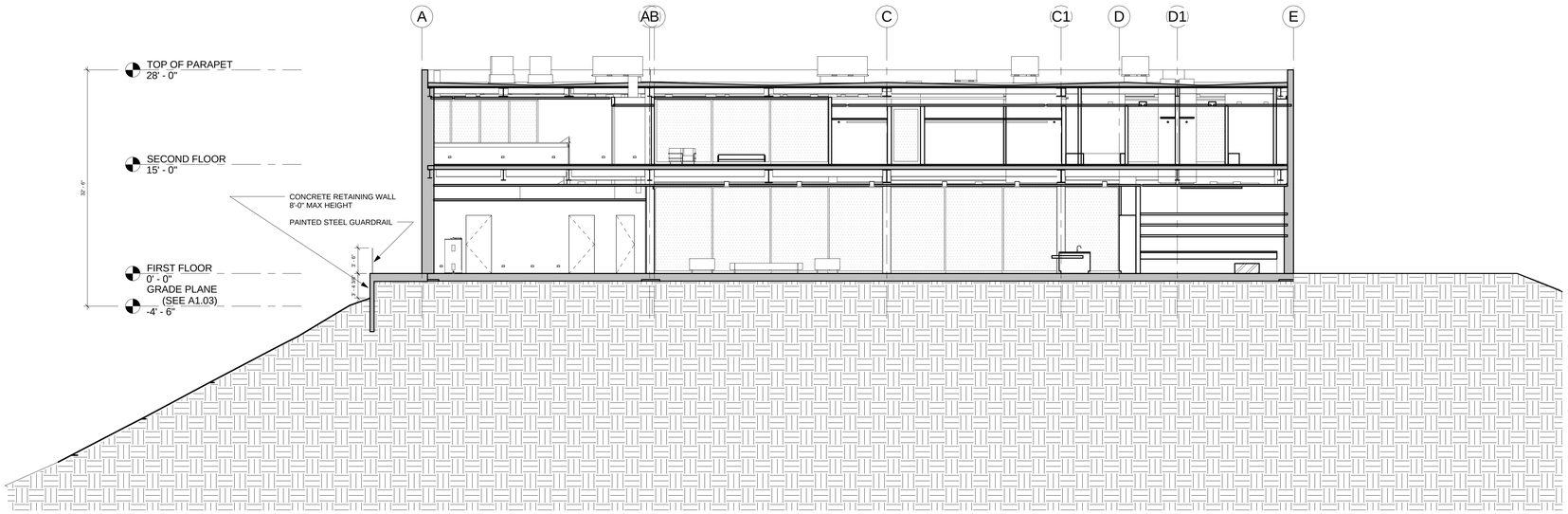

1 LONGITUDINAL SITE SECTION
1/8" = 1'-0"

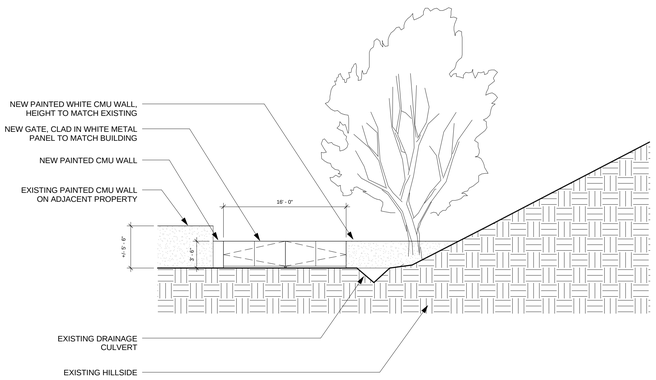

3 Entry Gate Elevation
1/8" = 1'-0"

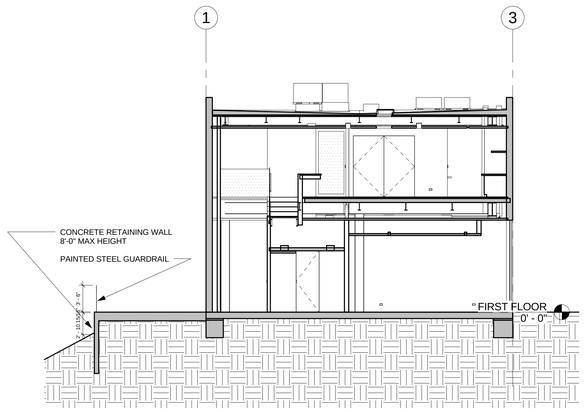

4 TRANSVERSE SITE SECTION2
1/8" = 1'-0"

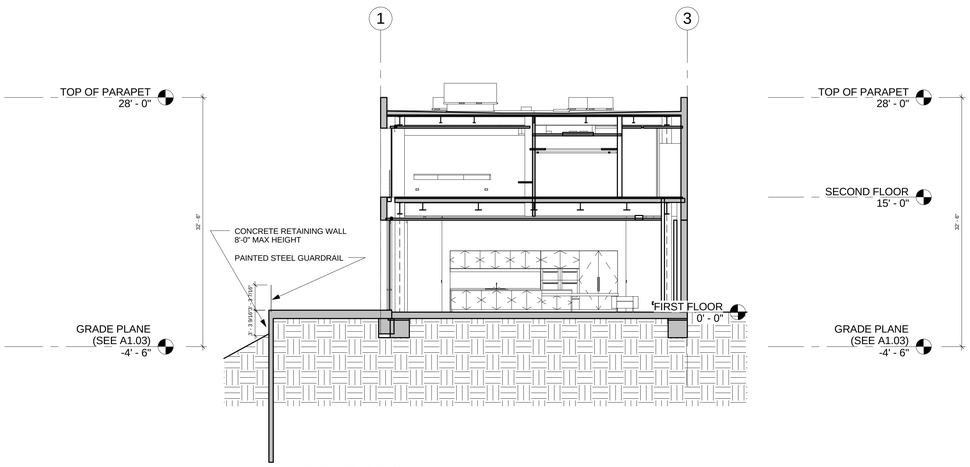

2 TRANSVERSE SITE SECTION
1/8" = 1'-0"

STEVEN EHRLICH
Architects

10865 WASHINGTON BLVD.
CULVER CITY, 90232.3600
TEL 310.838.9700
FAX 310.838.9737
WWW.S-EHRLICH.COM

PROJECT

Hoffman Castleman Residence

1445 El Bosque Ct, Pacific Palisades, CA

CONSULTANTS

NO.	DATE	REVISION

THIS DRAWING AND THE DESIGNS, ARRANGEMENTS, DEPICTIONS, IDEAS AND OTHER INFORMATION CONTAINED HEREIN CONSTITUTE UNPUBLISHED WORK OF STEVEN EHRLICH ARCHITECTS AND SHALL REMAIN PROPERTY OF STEVEN EHRLICH ARCHITECTS IN PERPETUITY. NO PART THEREOF SHALL BE REPRODUCED, COPIED, DISCLOSED, DISTRIBUTED, SOLD, PUBLISHED OR OTHERWISE USED IN ANYWAY WITHOUT THE ADVANCED EXPRESS WRITTEN CONSENT OF STEVEN EHRLICH ARCHITECTS. VISUAL CONTACT WITH THE ABOVE DRAWINGS, OR ANY PART THEREOF, SHALL CONSTITUE CONCLUSIVE EVIDENCE OF ACCEPTANCE OF THESE RESTRICTIONS.

SHEET TITLE

Site Sections

DRAWN:	Author
SCALE:	1/8" = 1'-0"
STATUS:	Back Check
DATE:	04-28-10
FILE:	S:\Nmarble\Hoffman\Hoffman Central Print.rvt
JOB:	491

SHEET NUMBER:

A1.02

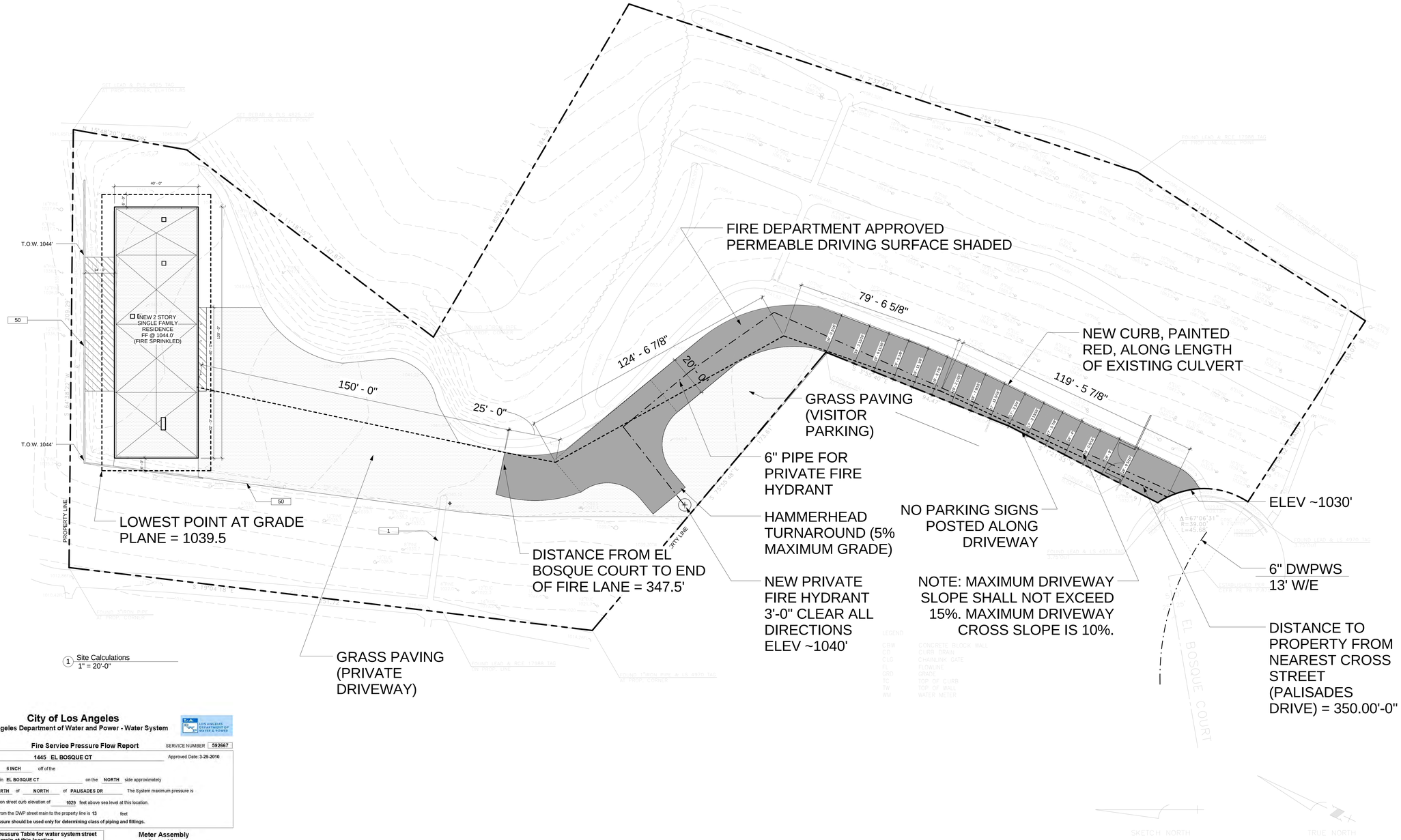

1 Site Calculations
1" = 20'-0"

City of Los Angeles
Los Angeles Department of Water and Power - Water System

SAR NUMBER **18969**

Fire Service Pressure Flow Report

SERVICE NUMBER 592667

For: **1445 EL BOSQUE CT** Approved Date: **3-29-2010**

Proposed Service **6 INCH** off of the

6 inch main in **EL BOSQUE CT** on the **NORTH** side approximately

330 feet **NORTH** of **NORTH** of **PALISADES DR** The System maximum pressure is

137 psi based on street curb elevation of **1029** feet above sea level at this location.

The distance from the DWP street main to the property line is **13** feet

System maximum pressure should be used only for determining class of piping and fittings.

Residual Flow/Pressure Table for water system street main at this location

Flow (gpm)	Press. (psi)	Flow (gpm)	Press. (psi)	Flow (gpm)	Press. (psi)
0	132	1080	114		
225	131	1115	113		
330	130	1145	112		
410	129	1175	111		
480	128	1205	110		
540	127	1235	109		
600	126	1265	108		
650	125	1290	107		
700	124	1320	106		
745	123	1345	105		
790	122	1375	104		
830	121	1400	103		
870	120				
910	119				
945	118				
980	117				
1015	116				
1050	115				

These values are subject to change due to changes in system facilities or demands.

Notes: Main upgrades are required. Existing 4" main cannot provide enough flow. 6" main upgrade is required to achieve flows represented in this SAR.

This information will be sent to the Department of Building and Safety for plan checking.
This SAR is valid for one year from 03-29-10. Please call DWP for recalculation or for reissue if no system changes have occurred.

For additional information contact the Water Distribution Services Section **WESTERN (213) 367-1225**

MARK PATTERSON	MARK PATTERSON	138-117
Prepared by	Approved by	Water Service Map

Meter Assembly Capacities

Domestic Meters
1 inch = 56 gpm
1-1/2 inch = 96 gpm
2 inch = 160 gpm
3 inch = 220 gpm
4 inch = 400 gpm
6 inch = 700 gpm
8 inch = 1500 gpm
10 inch = 2500 gpm

Fire Service
2 inch = 250 gpm
4 inch = 600 gpm
6 inch = 1400 gpm
8 inch = 2500 gpm
10 inch = 5000 gpm

FM Services
8 inch = 2500 gpm
10 inch = 5000 gpm

GRADE PLANE CALCULATIONS PER 2007 CBC:
LOWEST POINT OF EXISTING GRADE 6'-0" AWAY FROM BUILDING = 1035.5'
TOP OF PARAPET = 1072.0'
MAXIMUM ALLOWABLE HEIGHT IN RE-15 PER CITY OF LOS ANGELES = 45'
DISTANCE FROM LOWEST POINT AT GRADE PLANE TO TOP OF PARAPET = 36'-0" (< 45'-0" ALLOWED)

HEIGHT CALCULATIONS PER PALISADES HILLS ARCHITECTURAL AND LANDSCAPE CONTROLS:
MAXIMUM HEIGHT OF BUILDING = 32'-0" ABOVE GRADED PAD ELEVATION.
GRADED PAD ELEVATION = 1043'-6"
TOP OF PARAPET = 1072'-0"
HEIGHT OF BUILDING = 28'-6" (< 32'-0" ALLOWED)

STEVEN EHRLICH Architects
10865 WASHINGTON BLVD.
CULVER CITY, 90232.3600
TEL 310.838.9700
FAX 310.838.9737
WWW.S-EHRLICH.COM

PROJECT

Hoffman Castleman Residence

1445 El Bosque Ct, Pacific Palisades, CA

CONSULTANTS

NO. DATE REVISION

THIS DRAWING AND THE DESIGNS, ARRANGEMENTS, DEPICTIONS, IDEAS AND OTHER INFORMATION CONTAINED HEREIN CONSTITUTE UNPUBLISHED WORK OF STEVEN EHRLICH ARCHITECTS AND SHALL REMAIN PROPERTY OF STEVEN EHRLICH ARCHITECTS IN PERPETUITY. NO PART THEREOF SHALL BE REPRODUCED, COPIED, DISCLOSED, DISTRIBUTED, SOLD, PUBLISHED OR OTHERWISE USED IN ANYWAY WITHOUT THE ADVANCED EXPRESS WRITTEN CONSENT OF STEVEN EHRLICH ARCHITECTS. VISUAL CONTACT WITH THE ABOVE DRAWINGS, OR ANY PART THEREOF, SHALL CONSTITUE CONCLUSIVE EVIDENCE OF ACCEPTANCE OF THESE RESTRICTIONS.

SHEET TITLE

Site Calculations / Fire Dept.

DRAWN: Author
SCALE: 1" = 20'-0"
STATUS: Back Check
DATE: 04-28-10
FILE: S:\Nmarble\Hoffman\Hoffman Central Print.rvt
JOB: 491

SHEET NUMBER:

A1.03

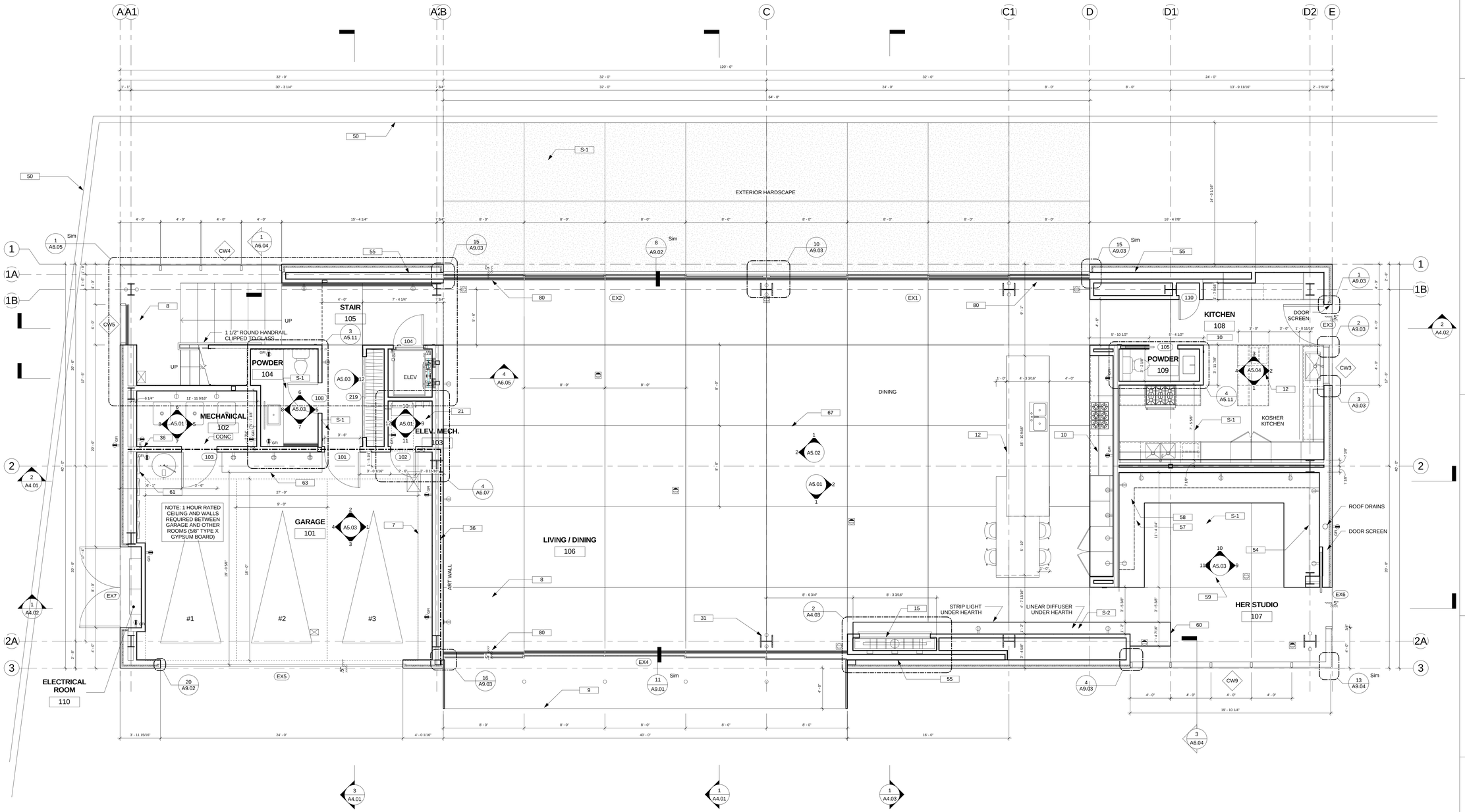

1 First Floor
1/4" = 1'-0"

TOTAL SQUARE FOOTAGE OF FIRST FLOOR : 4,800 SQUARE FEET
TOTAL COVERED SQUARE FOOTAGE AT SOUTH SIDE OF HOUSE: 120 SQUARE FEET
TOTAL EXTERIOR PATIO SQUARE FOOTAGE AT NORTH SIDE OF HOUSE: 896 SQUARE FEET

1 (E) FLOW LINE / CONCRETE CULVERT
2 (N) TREE
4 FIRE TRUCK TURNAROUND
7 BUILT IN STORAGE SHELVING
8 TERRAZZO FLOORING
9 METAL FRAME PER STRUCTURAL, FINISH TO MATCH WHITE EXTERIOR METAL PANEL OF BUILDING
10 KITCHEN BY OTHERS
11 CASEWORK
12 KITCHEN ISLAND PER KITCHEN DRAWINGS
14 TELEVISION BY OWNER
15 GAS FIREPLACE
18 WATER HEATER
19 SHOWER BENCH
20 CLEAR GLASS RAIL (42")
21 ELEVATOR MECHANICAL EQUIPMENT
22 JACUZZI BATHTUB
28 GYPSUM WALL BOARD
30 DEHUMIDIFIER IN CLOSET
31 EXPOSED STEEL COLUMN PER STRUCTURAL, PAINTED (TYP.)
32 SINGLE GLAZED TEMPERED SLIDING DOOR SYSTEM, FLEETWOOD OR EQUAL
33 OPERABLE SKYLIGHT - W/ 4" CURB ABOVE ROOF
34 ROOF DRAIN TYP.
35 WALL SAFE
36 1 HOUR RATED WALL
37 METAL PANEL CLADDING SYSTEM KYNAR PAINTED WHITE
38 CURTAIN WALL, SEE CURTAIN WALL SCHEDULE
39 JOINT OF METAL PANEL SYSTEM, TYP
40 DOOR, SEE DOOR SCHEDULE
42 FLIP UP GARAGE DOOR CLAD IN METAL PANEL SYSTEM SIM. TO EXTERIOR OF BUILDING
43 1/2" BASE REVEAL
45 CLOSET-POLE AND SHELF
46 BATHTUB
47 PREWIRE FOR FUTURE PHOTOVOLTAIC PANELS
48 PERMEABLE GRASS PAVING SYSTEM
49 (N) FIRE HYDRANT
50 (N) CONCRETE RETAINING WALL
54 ART WALL
55 SLIDING DOOR POCKET
56 KNEESPACE BELOW
57 FILE CABINETS BELOW, LATERAL LEGAL
58 SHELVING, EUROCONCEPTS AIKO OR EQUAL
59 ROLLING TABLE BY OWNER
60 4" THICK ART DISPLAY LEDGE / HEARTH, CAESARSTONE "CONCRETE"
61 ELECTRICAL SUB PANEL, SEE ELECTRICAL DRAWINGS
63 TELEPHONE / SECURITY / LIGHTING CONTROL PANELS
66 ELECTRICAL OUTLET - SEE ELECTRICAL DRAWINGS
67 METAL REGLET IN TERRAZZO FLOORING
68 ROOFTOP MECHANICAL EQUIPMENT PER MECHANICAL DRAWINGS
69 YELLOW GLASS
71 MOTORIZED ROLL DOWN SHADE
72 GLASS
73 TILE
74 BACKLIT MIRROR HELD OFF OF WALL BEHIND
75 ELECTRICAL EQUIPMENT - SEE ELECTRICAL DRAWINGS
76 RED GLASS
77 RETURN AIR LINEAR DIFFUSER - SEE MECHANICAL DRAWINGS
78 LIGHTING CONTROL KEYPAD - SEE ELECTRICAL DRAWINGS
80 DOOR - ELECTIRCALLY OPERATED - SEE DOOR SCHEDULE
81 LAMINATE COUNTERTOP
82 LIGHTING FIXTURE, SEE LIGHTING DRAWINGS FOR TYPE
83 MECHANICAL REGISTER, SEE MECHANICAL DRAWINGS FOR TYPE
C-4 CASEWORK- MSTR BDRM
C-7 CASEWORK- ART STORAGE
C-8 CASEWORK- LIVING ROOM
CONC EXPOSED CONCRETE, SEALED
P PAINT
S-1 TERRAZZO
S-2 CAESARSTONE - CONCRETE

STEVEN EHRLICH Architects
10865 WASHINGTON BLVD.
CULVER CITY, 90232.3600
TEL 310.838.9700
FAX 310.838.9737
WWW.S-EHRLICH.COM

PROJECT

Hoffman Castleman Residence

1445 El Bosque Ct, Pacific Palisades, CA

CONSULTANTS

NO.	DATE	REVISION

THIS DRAWING AND THE DESIGNS, ARRANGEMENTS, DEPICTIONS, IDEAS AND OTHER INFORMATION CONTAINED HEREIN CONSTITUTE UNPUBLISHED WORK OF STEVEN EHRLICH ARCHITECTS AND SHALL REMAIN PROPERTY OF STEVEN EHRLICH ARCHITECTS IN PERPETUITY. NO PART THEREOF SHALL BE REPRODUCED, COPIED, DISCLOSED, DISTRIBUTED, SOLD, PUBLISHED OR OTHERWISE USED IN ANYWAY WITHOUT THE ADVANCED EXPRESS WRITTEN CONSENT OF STEVEN EHRLICH ARCHITECTS. VISUAL CONTACT WITH THE ABOVE DRAWINGS, OR ANY PART THEREOF, SHALL CONSTITUE CONCLUSIVE EVIDENCE OF ACCEPTANCE OF THESE RESTRICTIONS.

SHEET TITLE

First Floor Plan

DRAWN: Author
SCALE: 1/4" = 1'-0"
STATUS: Back Check
DATE: 04-28-10
FILE: S:\Nmarble\Hoffman\Hoffman Central Print.rvt
JOB: 491
SHEET NUMBER:

A2.01

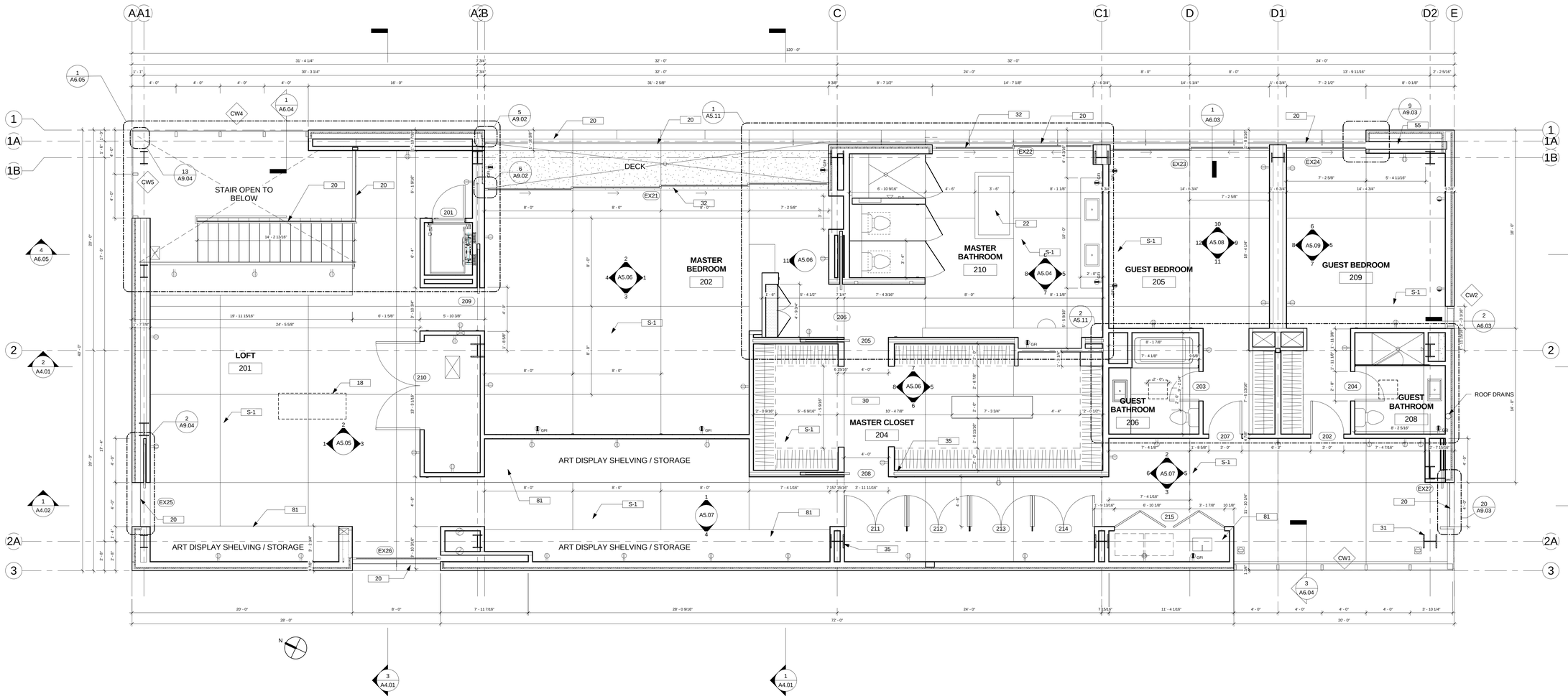

1 Second Floor
1/4" = 1'-0"

TOTAL SQUARE FOOTAGE OF SECOND FLOOR : 4,560 SQUARE FEET

1 (E) FLOW LINE / CONCRETE CULVERT
2 (N) TREE
4 FIRE TRUCK TURNAROUND
7 BUILT IN STORAGE SHELVING
8 TERRAZZO FLOORING
9 METAL FRAME PER STRUCTURAL, FINISH TO MATCH WHITE EXTERIOR METAL PANEL OF BUILDING
10 KITCHEN BY OTHERS
11 CASEWORK
12 KITCHEN ISLAND PER KITCHEN DRAWINGS
14 TELEVISION BY OWNER
15 GAS FIREPLACE
18 WATER HEATER
19 SHOWER BENCH
20 CLEAR GLASS RAIL (42")
21 ELEVATOR MECHANICAL EQUIPMENT
22 JACUZZI BATHTUB
28 GYPSUM WALL BOARD
30 DEHUMIDIFIER IN CLOSET
31 EXPOSED STEEL COLUMN PER STRUCTURAL, PAINTED (TYP.)
32 SINGLE GLAZED TEMPERED SLIDING DOOR SYSTEM, FLEETWOOD OR EQUAL
33 OPERABLE SKYLIGHT - W/ 4" CURB ABOVE ROOF
34 ROOF DRAIN TYP.
35 WALL SAFE
36 1 HOUR RATED WALL
37 METAL PANEL CLADDING SYSTEM KYNAR PAINTED WHITE
38 CURTAIN WALL, SEE CURTAIN WALL SCHEDULE
39 JOINT OF METAL PANEL SYSTEM, TYP
40 DOOR, SEE DOOR SCHEDULE
42 FLIP UP GARAGE DOOR CLAD IN METAL PANEL SYSTEM SIM. TO EXTERIOR OF BUILDING
43 1/2" BASE REVEAL
45 CLOSET-POLE AND SHELF
46 BATHTUB
47 PREWIRE FOR FUTURE PHOTOVOLTAIC PANELS
48 PERMEABLE GRASS PAVING SYSTEM
49 (N) FIRE HYDRANT
50 (N) CONCRETE RETAINING WALL
54 ART WALL
55 SLIDING DOOR POCKET
56 KNEESPACE BELOW
57 FILE CABINETS BELOW, LATERAL LEGAL
58 SHELVING, EUROCONCEPTS AIKO OR EQUAL
59 ROLLING TABLE BY OWNER
60 4" THICK ART DISPLAY LEDGE / HEARTH, CAESARSTONE "CONCRETE"
61 ELECTRICAL SUB PANEL, SEE ELECTRICAL DRAWINGS
63 TELEPHONE / SECURITY / LIGHTING CONTROL PANELS
66 ELECTRICAL OUTLET - SEE ELECTRICAL DRAWINGS
67 METAL REGLET IN TERRAZZO FLOORING
68 ROOFTOP MECHANICAL EQUIPMENT PER MECHANICAL DRAWINGS
69 YELLOW GLASS
71 MOTORIZED ROLL DOWN SHADE
72 GLASS
73 TILE
74 BACKLIT MIRROR HELD OFF OF WALL BEHIND
75 ELECTRICAL EQUIPMENT - SEE ELECTRICAL DRAWINGS
76 RED GLASS
77 RETURN AIR LINEAR DIFFUSER - SEE MECHANICAL DRAWINGS
78 LIGHTING CONTROL KEYPAD - SEE ELECTRICAL DRAWINGS
80 DOOR - ELECTIRCALLY OPERATED - SEE DOOR SCHEDULE
81 LAMINATE COUNTERTOP
82 LIGHTING FIXTURE, SEE LIGHTING DRAWINGS FOR TYPE
83 MECHANICAL REGISTER, SEE MECHANICAL DRAWINGS FOR TYPE
C-4 CASEWORK- MSTR BDRM
C-7 CASEWORK- ART STORAGE
C-8 CASEWORK- LIVING ROOM
CONC EXPOSED CONCRETE, SEALED
P PAINT
S-1 TERRAZZO
S-2 CAESARSTONE - CONCRETE

STEVEN EHRLICH Architects
10865 WASHINGTON BLVD.
CULVER CITY, 90232.3600
TEL 310.838.9700
FAX 310.838.9737
WWW.S-EHRLICH.COM

PROJECT

Hoffman Castleman Residence

1445 El Bosque Ct, Pacific Palisades, CA

CONSULTANTS

NO.	DATE	REVISION

THIS DRAWING AND THE DESIGNS, ARRANGEMENTS, DEPICTIONS, IDEAS AND OTHER INFORMATION CONTAINED HEREIN CONSTITUTE UNPUBLISHED WORK OF STEVEN EHRLICH ARCHITECTS AND SHALL REMAIN PROPERTY OF STEVEN EHRLICH ARCHITECTS IN PERPETUITY. NO PART THEREOF SHALL BE REPRODUCED, COPIED, DISCLOSED, DISTRIBUTED, SOLD, PUBLISHED OR OTHERWISE USED IN ANYWAY WITHOUT THE ADVANCED EXPRESS WRITTEN CONSENT OF STEVEN EHRLICH ARCHITECTS. VISUAL CONTACT WITH THE ABOVE DRAWINGS, OR ANY PART THEREOF, SHALL CONSTITUE CONCLUSIVE EVIDENCE OF ACCEPTANCE OF THESE RESTRICTIONS.

SHEET TITLE

Second Floor Plan

DRAWN: Author
SCALE: 1/4" = 1'-0"
STATUS: Back Check
DATE: 04-28-10
FILE: S:\Nmarble\Hoffman\Hoffman Central Print.rvt
JOB: 491
SHEET NUMBER:

A2.02

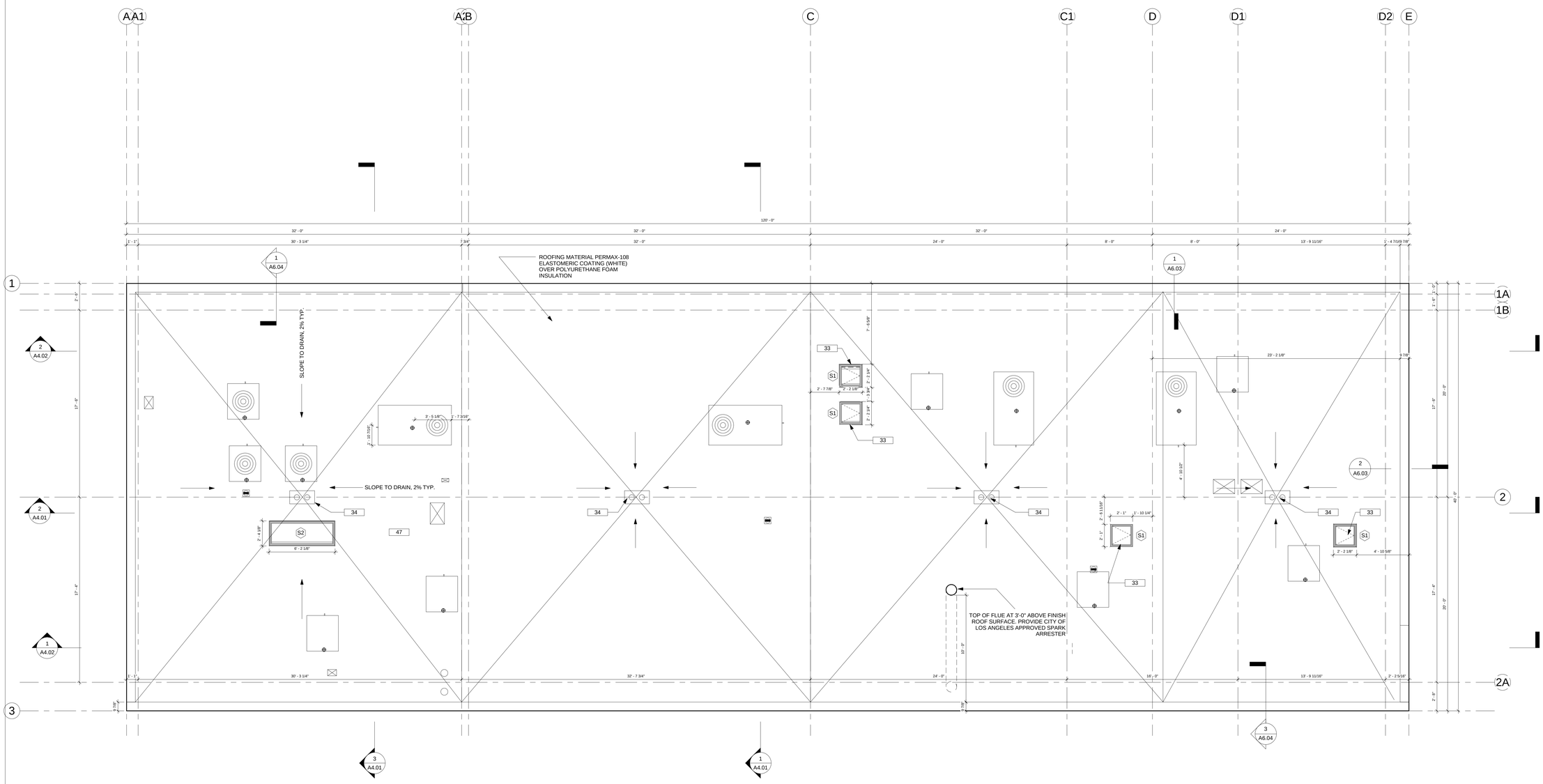

1 ROOF PLAN
1/4" = 1'-0"

NOTE: ALL SKYLIGHTS TO BE MOUNTED ON A 4" CURB ABOVE THE FINISH ROOF ELEVATION.

STEVEN EHRLICH
Architects

10865 WASHINGTON BLVD.
CULVER CITY, 90232.3600
TEL 310.838.9700
FAX 310.838.9737
WWW.S-EHRLICH.COM

PROJECT

Hoffman Castleman Residence

1445 El Bosque Ct, Pacific Palisades, CA

CONSULTANTS

NO.	DATE	REVISION

THIS DRAWING AND THE DESIGNS, ARRANGEMENTS, DEPICTIONS, IDEAS AND OTHER INFORMATION CONTAINED HEREIN CONSTITUTE UNPUBLISHED WORK OF STEVEN EHRLICH ARCHITECTS AND SHALL REMAIN PROPERTY OF STEVEN EHRLICH ARCHITECTS IN PERPETUITY. NO PART THEREOF SHALL BE REPRODUCED, COPIED, DISCLOSED, DISTRIBUTED, SOLD, PUBLISHED OR OTHERWISE USED IN ANYWAY WITHOUT THE ADVANCED EXPRESS WRITTEN CONSENT OF STEVEN EHRLICH ARCHITECTS. VISUAL CONTACT WITH THE ABOVE DRAWINGS, OR ANY PART THEREOF, SHALL CONSTITUE CONCLUSIVE EVIDENCE OF ACCEPTANCE OF THESE RESTRICTIONS.

SHEET TITLE

Roof Plan

DRAWN:	Author
SCALE:	1/4" = 1'-0"
STATUS:	Back Check
DATE:	04-28-10
FILE:	S:\Nmarble\Hoffman\Hoffman Central Print.rvt
JOB:	491

SHEET NUMBER:

A2.03

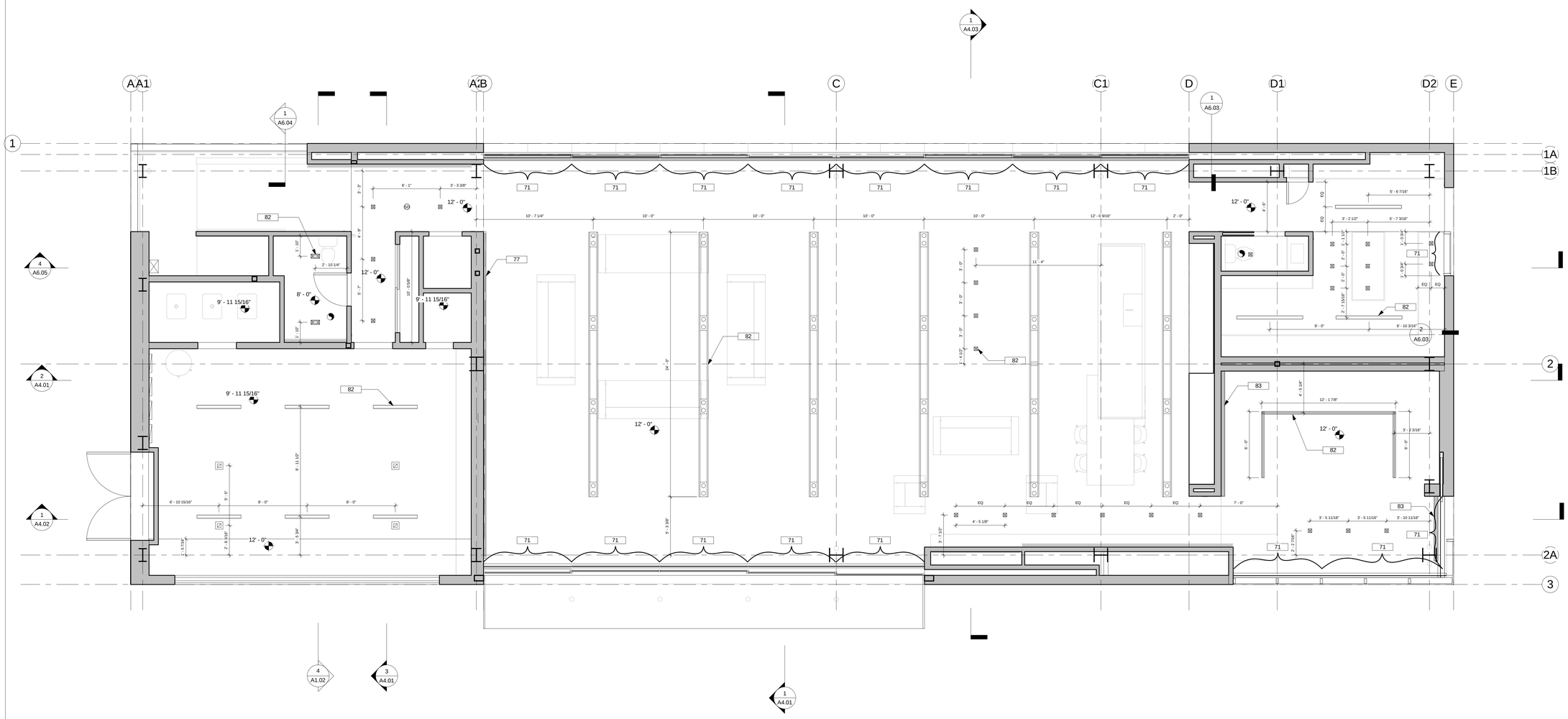

1 FIRST FLOOR
1/4" = 1'-0"

1	(E) FLOW LINE / CONCRETE CULVERT
2	(N) TREE
4	FIRE TRUCK TURNAROUND
7	BUILT IN STORAGE SHELVING
8	TERRAZZO FLOORING
9	METAL FRAME PER STRUCTURAL, FINISH TO MATCH WHITE EXTERIOR METAL PANEL OF BUILDING
10	KITCHEN BY OTHERS
11	CASEWORK
12	KITCHEN ISLAND PER KITCHEN DRAWINGS
14	TELEVISION BY OWNER
15	GAS FIREPLACE
18	WATER HEATER
19	SHOWER BENCH
20	CLEAR GLASS RAIL (42")
21	ELEVATOR MECHANICAL EQUIPMENT
22	JACUZZI BATHTUB
28	GYPSUM WALL BOARD
30	DEHUMIDIFIER IN CLOSET
31	EXPOSED STEEL COLUMN PER STRUCTURAL, PAINTED (TYP.)
32	SINGLE GLAZED TEMPERED SLIDING DOOR SYSTEM, FLEETWOOD OR EQUAL
33	OPERABLE SKYLIGHT - W/ 4" CURB ABOVE ROOF
34	ROOF DRAIN TYP.
35	WALL SAFE
36	1 HOUR RATED WALL
37	METAL PANEL CLADDING SYSTEM KYNAR PAINTED WHITE
38	CURTAIN WALL, SEE CURTAIN WALL SCHEDULE
39	JOINT OF METAL PANEL SYSTEM, TYP
40	DOOR, SEE DOOR SCHEDULE
42	FLIP UP GARAGE DOOR CLAD IN METAL PANEL SYSTEM SIM. TO EXTERIOR OF BUILDING
43	1/2" BASE REVEAL
45	CLOSET-POLE AND SHELF
46	BATHTUB
47	PREWIRE FOR FUTURE PHOTOVOLTAIC PANELS
48	PERMEABLE GRASS PAVING SYSTEM
49	(N) FIRE HYDRANT
50	(N) CONCRETE RETAINING WALL
54	ART WALL
55	SLIDING DOOR POCKET
56	KNEESPACE BELOW
57	FILE CABINETS BELOW, LATERAL LEGAL
58	SHELVING, EUROCONCEPTS AIKO OR EQUAL
59	ROLLING TABLE BY OWNER
60	4" THICK ART DISPLAY LEDGE / HEARTH, CAESARSTONE "CONCRETE"
61	ELECTRICAL SUB PANEL, SEE ELECTRICAL DRAWINGS
63	TELEPHONE / SECURITY / LIGHTING CONTROL PANELS
66	ELECTRICAL OUTLET - SEE ELECTRICAL DRAWINGS
67	METAL REGLET IN TERRAZZO FLOORING
68	ROOFTOP MECHANICAL EQUIPMENT PER MECHANICAL DRAWINGS
69	YELLOW GLASS
71	MOTORIZED ROLL DOWN SHADE
72	GLASS
73	TILE
74	BACKLIT MIRROR HELD OFF OF WALL BEHIND
75	ELECTRICAL EQUIPMENT - SEE ELECTRICAL DRAWINGS
76	RED GLASS
77	RETURN AIR LINEAR DIFFUSER - SEE MECHANICAL DRAWINGS
78	LIGHTING CONTROL KEYPAD - SEE ELECTRICAL DRAWINGS
80	DOOR - ELECTIRCALLY OPERATED - SEE DOOR SCHEDULE
81	LAMINATE COUNTERTOP
82	LIGHTING FIXTURE, SEE LIGHTING DRAWINGS FOR TYPE
83	MECHANICAL REGISTER, SEE MECHANICAL DRAWINGS FOR TYPE
C-4	CASEWORK- MSTR BDRM
C-7	CASEWORK- ART STORAGE
C-8	CASEWORK- LIVING ROOM
CONC	EXPOSED CONCRETE, SEALED
P	PAINT
S-1	TERRAZZO
S-2	CAESARSTONE - CONCRETE

STEVEN EHRLICH
Architects
10865 WASHINGTON BLVD.
CULVER CITY, 90232.3600
TEL 310.838.9700
FAX 310.838.9737
WWW.S-EHRLICH.COM

PROJECT

Hoffman Castleman Residence

1445 El Bosque Ct, Pacific Palisades, CA

CONSULTANTS

NO.	DATE	REVISION

THIS DRAWING AND THE DESIGNS, ARRANGEMENTS, DEPICTIONS, IDEAS AND OTHER INFORMATION CONTAINED HEREIN CONSTITUTE UNPUBLISHED WORK OF STEVEN EHRLICH ARCHITECTS AND SHALL REMAIN PROPERTY OF STEVEN EHRLICH ARCHITECTS IN PERPETUITY. NO PART THEREOF SHALL BE REPRODUCED, COPIED, DISCLOSED, DISTRIBUTED, SOLD, PUBLISHED OR OTHERWISE USED IN ANYWAY WITHOUT THE ADVANCED EXPRESS WRITTEN CONSENT OF STEVEN EHRLICH ARCHITECTS. VISUAL CONTACT WITH THE ABOVE DRAWINGS, OR ANY PART THEREOF, SHALL CONSTITUE CONCLUSIVE EVIDENCE OF ACCEPTANCE OF THESE RESTRICTIONS.

SHEET TITLE

First Floor Reflected Ceiling Plan

DRAWN:	Author
SCALE:	1/4" = 1'-0"
STATUS:	Back Check
DATE:	04-28-10
FILE:	S:\Nmarble\Hoffman\Hoffman Central Print.rvt
JOB:	491

SHEET NUMBER:

A2.11

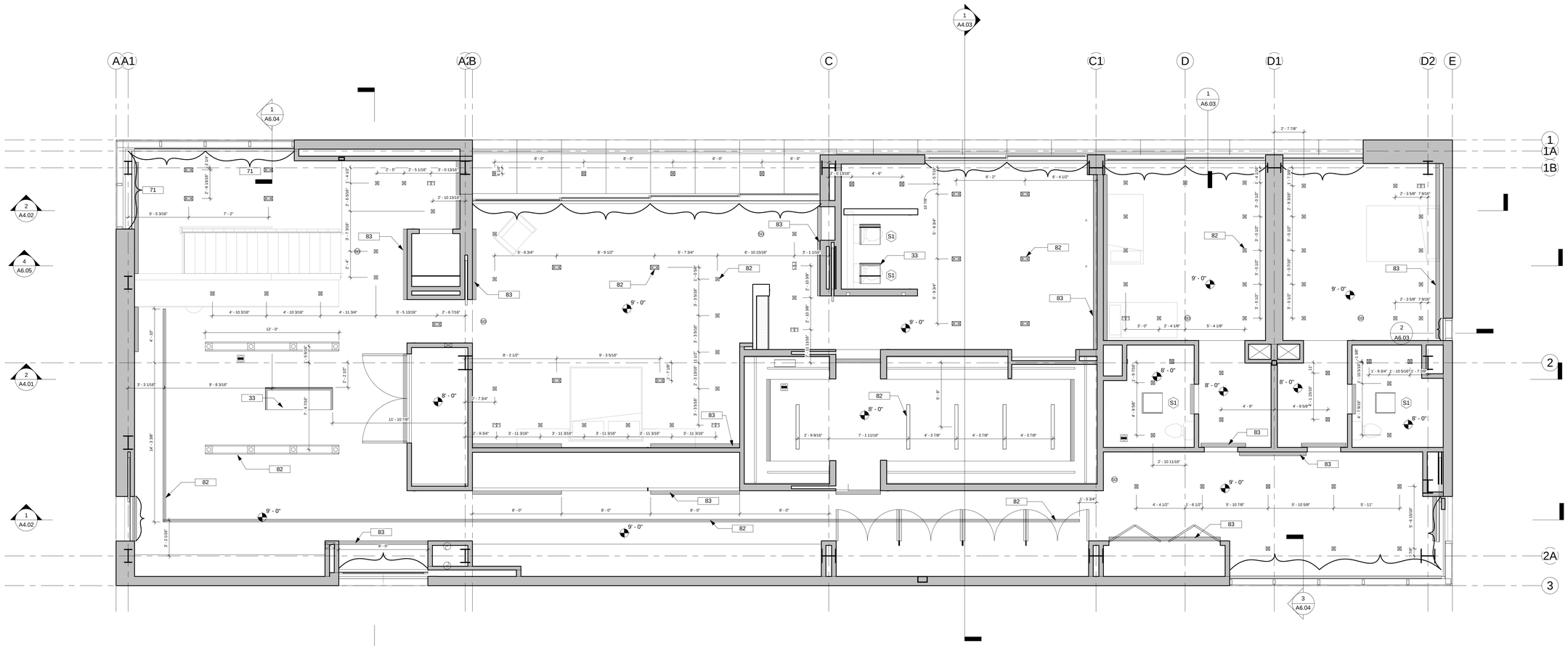

2 SECOND FLOOR
1/4" = 1'-0"

1	(E) FLOW LINE / CONCRETE CULVERT
2	(N) TREE
4	FIRE TRUCK TURNAROUND
7	BUILT IN STORAGE SHELVING
8	TERRAZZO FLOORING
9	METAL FRAME PER STRUCTURAL, FINISH TO MATCH WHITE EXTERIOR METAL PANEL OF BUILDING
10	KITCHEN BY OTHERS
11	CASEWORK
12	KITCHEN ISLAND PER KITCHEN DRAWINGS
14	TELEVISION BY OWNER
15	GAS FIREPLACE
18	WATER HEATER
19	SHOWER BENCH
20	CLEAR GLASS RAIL (42")
21	ELEVATOR MECHANICAL EQUIPMENT
22	JACUZZI BATHTUB
28	GYPSUM WALL BOARD
30	DEHUMIDIFIER IN CLOSET
31	EXPOSED STEEL COLUMN PER STRUCTURAL, PAINTED (TYP.)
32	SINGLE GLAZED TEMPERED SLIDING DOOR SYSTEM, FLEETWOOD OR EQUAL
33	OPERABLE SKYLIGHT - W/ 4" CURB ABOVE ROOF
34	ROOF DRAIN TYP.
35	WALL SAFE
36	1 HOUR RATED WALL
37	METAL PANEL CLADDING SYSTEM KYNAR PAINTED WHITE
38	CURTAIN WALL, SEE CURTAIN WALL SCHEDULE
39	JOINT OF METAL PANEL SYSTEM, TYP
40	DOOR, SEE DOOR SCHEDULE
42	FLIP UP GARAGE DOOR CLAD IN METAL PANEL SYSTEM SIM. TO EXTERIOR OF BUILDING
43	1/2" BASE REVEAL
45	CLOSET-POLE AND SHELF
46	BATHTUB
47	PREWIRE FOR FUTURE PHOTOVOLTAIC PANELS
48	PERMEABLE GRASS PAVING SYSTEM
49	(N) FIRE HYDRANT
50	(N) CONCRETE RETAINING WALL
54	ART WALL
55	SLIDING DOOR POCKET
56	KNEESPACE BELOW
57	FILE CABINETS BELOW, LATERAL LEGAL
58	SHELVING, EUROCONCEPTS AIKO OR EQUAL
59	ROLLING TABLE BY OWNER
60	4" THICK ART DISPLAY LEDGE / HEARTH, CAESARSTONE "CONCRETE"
61	ELECTRICAL SUB PANEL, SEE ELECTRICAL DRAWINGS
63	TELEPHONE / SECURITY / LIGHTING CONTROL PANELS
66	ELECTRICAL OUTLET - SEE ELECTRICAL DRAWINGS
67	METAL REGLET IN TERRAZZO FLOORING
68	ROOFTOP MECHANICAL EQUIPMENT PER MECHANICAL DRAWINGS
69	YELLOW GLASS
71	MOTORIZED ROLL DOWN SHADE
72	GLASS
73	TILE
74	BACKLIT MIRROR HELD OFF OF WALL BEHIND
75	ELECTRICAL EQUIPMENT - SEE ELECTRICAL DRAWINGS
76	RED GLASS
77	RETURN AIR LINEAR DIFFUSER - SEE MECHANICAL DRAWINGS
78	LIGHTING CONTROL KEYPAD - SEE ELECTRICAL DRAWINGS
80	DOOR - ELECTIRCALLY OPERATED - SEE DOOR SCHEDULE
81	LAMINATE COUNTERTOP
82	LIGHTING FIXTURE, SEE LIGHTING DRAWINGS FOR TYPE
83	MECHANICAL REGISTER, SEE MECHANICAL DRAWINGS FOR TYPE
C-4	CASEWORK- MSTR BDRM
C-7	CASEWORK- ART STORAGE
C-8	CASEWORK- LIVING ROOM
CONC	EXPOSED CONCRETE, SEALED
P	PAINT
S-1	TERRAZZO
S-2	CAESARSTONE - CONCRETE

STEVEN EHRLICH
Architects
10865 WASHINGTON BLVD.
CULVER CITY, 90232.3600
TEL 310.838.9700
FAX 310.838.9737
WWW.S-EHRLICH.COM

PROJECT

Hoffman Castleman Residence

1445 El Bosque Ct, Pacific Palisades, CA

CONSULTANTS

NO.	DATE	REVISION

THIS DRAWING AND THE DESIGNS, ARRANGEMENTS, DEPICTIONS, IDEAS AND OTHER INFORMATION CONTAINED HEREIN CONSTITUTE UNPUBLISHED WORK OF STEVEN EHRLICH ARCHITECTS AND SHALL REMAIN PROPERTY OF STEVEN EHRLICH ARCHITECTS IN PERPETUITY. NO PART THEREOF SHALL BE REPRODUCED, COPIED, DISCLOSED, DISTRIBUTED, SOLD, PUBLISHED OR OTHERWISE USED IN ANYWAY WITHOUT THE ADVANCED EXPRESS WRITTEN CONSENT OF STEVEN EHRLICH ARCHITECTS. VISUAL CONTACT WITH THE ABOVE DRAWINGS, OR ANY PART THEREOF, SHALL CONSTITUE CONCLUSIVE EVIDENCE OF ACCEPTANCE OF THESE RESTRICTIONS.

SHEET TITLE

Second Floor Reflected Ceiling Plan

DRAWN:	Author
SCALE:	1/4" = 1'-0"
STATUS:	Back Check
DATE:	04-28-10
FILE:	S:\Nmarble\Hoffman\Hoffman Central Print.rvt
JOB:	491
SHEET NUMBER:	A2.12

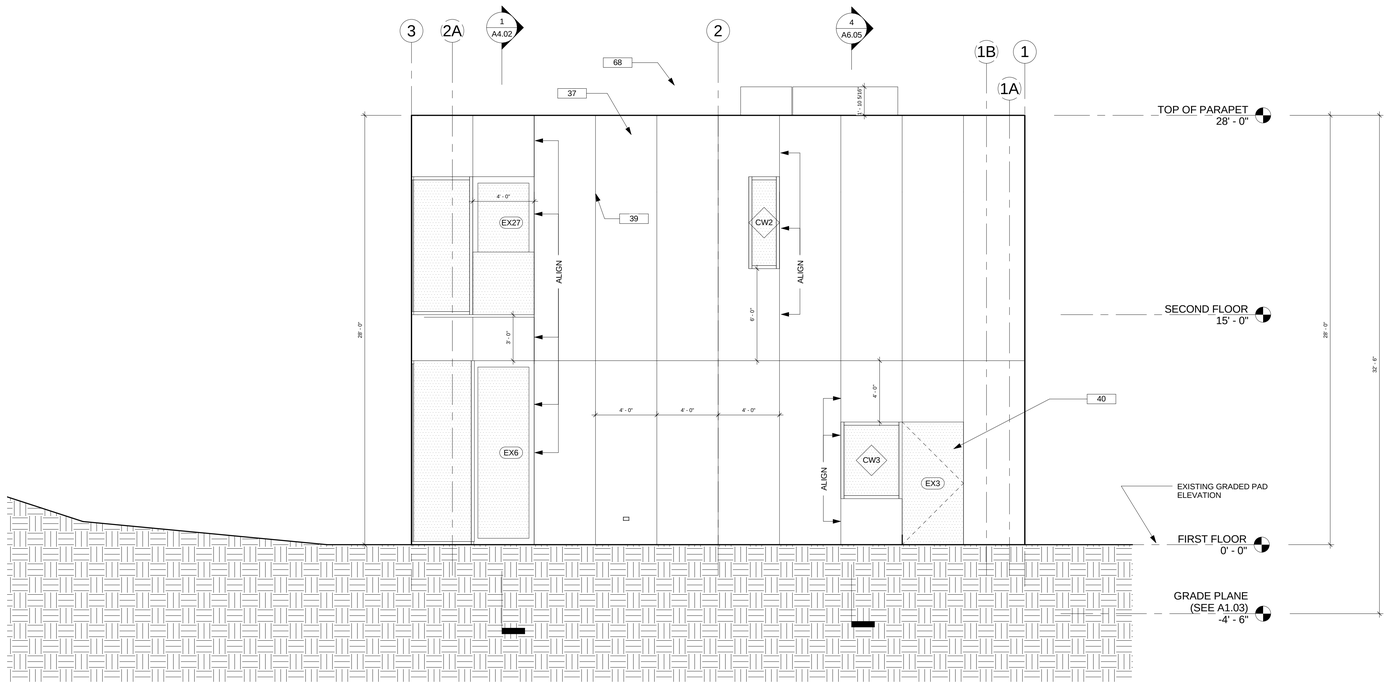

1 East
1/4" = 1'-0"

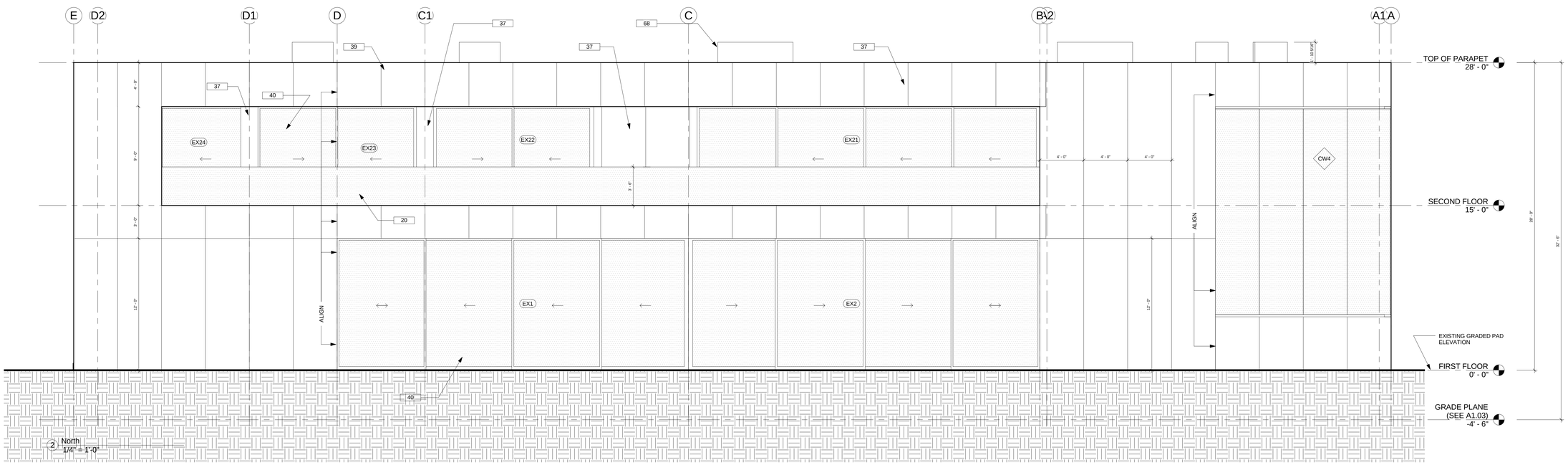

2 North
1/4" = 1'-0"

1 (E) FLOW LINE / CONCRETE CULVERT
2 (N) TREE
4 FIRE TRUCK TURNAROUND
7 BUILT IN STORAGE SHELVING
8 TERRAZZO FLOORING
9 METAL FRAME PER STRUCTURAL, FINISH TO MATCH WHITE EXTERIOR METAL PANEL OF BUILDING
10 KITCHEN BY OTHERS
11 CASEWORK
12 KITCHEN ISLAND PER KITCHEN DRAWINGS
14 TELEVISION BY OWNER
15 GAS FIREPLACE
18 WATER HEATER
19 SHOWER BENCH
20 CLEAR GLASS RAIL (42")
21 ELEVATOR MECHANICAL EQUIPMENT
22 JACUZZI BATHTUB
28 GYPSUM WALL BOARD
30 DEHUMIDIFIER IN CLOSET
31 EXPOSED STEEL COLUMN PER STRUCTURAL, PAINTED (TYP.)
32 SINGLE GLAZED TEMPERED SLIDING DOOR SYSTEM, FLEETWOOD OR EQUAL
33 OPERABLE SKYLIGHT - W/ 4" CURB ABOVE ROOF
34 ROOF DRAIN TYP.
35 WALL SAFE
36 1 HOUR RATED WALL
37 METAL PANEL CLADDING SYSTEM KYNAR PAINTED WHITE
38 CURTAIN WALL, SEE CURTAIN WALL SCHEDULE
39 JOINT OF METAL PANEL SYSTEM, TYP
40 DOOR, SEE DOOR SCHEDULE
42 FLIP UP GARAGE DOOR CLAD IN METAL PANEL SYSTEM SIM. TO EXTERIOR OF BUILDING
43 1/2" BASE REVEAL
45 CLOSET-POLE AND SHELF
46 BATHTUB
47 PREWIRE FOR FUTURE PHOTOVOLTAIC PANELS
48 PERMEABLE GRASS PAVING SYSTEM
49 (N) FIRE HYDRANT
50 (N) CONCRETE RETAINING WALL
54 ART WALL
55 SLIDING DOOR POCKET
56 KNEESPACE BELOW
57 FILE CABINETS BELOW, LATERAL LEGAL
58 SHELVING, EUROCONCEPTS AIKO OR EQUAL
59 ROLLING TABLE BY OWNER
60 4" THICK ART DISPLAY LEDGE / HEARTH, CAESARSTONE "CONCRETE"
61 ELECTRICAL SUB PANEL, SEE ELECTRICAL DRAWINGS
63 TELEPHONE / SECURITY / LIGHTING CONTROL PANELS
66 ELECTRICAL OUTLET - SEE ELECTRICAL DRAWINGS
67 METAL REGLET IN TERRAZZO FLOORING
68 ROOFTOP MECHANICAL EQUIPMENT PER MECHANICAL DRAWINGS
69 YELLOW GLASS
71 MOTORIZED ROLL DOWN SHADE
72 GLASS
73 TILE
74 BACKLIT MIRROR HELD OFF OF WALL BEHIND
75 ELECTRICAL EQUIPMENT - SEE ELECTRICAL DRAWINGS
76 RED GLASS
77 RETURN AIR LINEAR DIFFUSER - SEE MECHANICAL DRAWINGS
78 LIGHTING CONTROL KEYPAD - SEE ELECTRICAL DRAWINGS
80 DOOR - ELECTIRCALLY OPERATED - SEE DOOR SCHEDULE
81 LAMINATE COUNTERTOP
82 LIGHTING FIXTURE, SEE LIGHTING DRAWINGS FOR TYPE
83 MECHANICAL REGISTER, SEE MECHANICAL DRAWINGS FOR TYPE
C-4 CASEWORK- MSTR BDRM
C-7 CASEWORK- ART STORAGE
C-8 CASEWORK- LIVING ROOM
CONC EXPOSED CONCRETE, SEALED
P PAINT
S-1 TERRAZZO
S-2 CAESARSTONE - CONCRETE

STEVEN EHRLICH
Architects
10865 WASHINGTON BLVD.
CULVER CITY, 90232.3600
TEL 310.838.9700
FAX 310.838.9737
WWW.S-EHRLICH.COM

PROJECT

Hoffman Castleman Residence

1445 El Bosque Ct, Pacific Palisades, CA

CONSULTANTS

NO.	DATE	REVISION

THIS DRAWING AND THE DESIGNS, ARRANGEMENTS, DEPICTIONS, IDEAS AND OTHER INFORMATION CONTAINED HEREIN CONSTITUTE UNPUBLISHED WORK OF STEVEN EHRLICH ARCHITECTS AND SHALL REMAIN PROPERTY OF STEVEN EHRLICH ARCHITECTS IN PERPETUITY. NO PART THEREOF SHALL BE REPRODUCED, COPIED, DISCLOSED, DISTRIBUTED, SOLD, PUBLISHED OR OTHERWISE USED IN ANYWAY WITHOUT THE ADVANCED EXPRESS WRITTEN CONSENT OF STEVEN EHRLICH ARCHITECTS. VISUAL CONTACT WITH THE ABOVE DRAWINGS, OR ANY PART THEREOF, SHALL CONSTITUE CONCLUSIVE EVIDENCE OF ACCEPTANCE OF THESE RESTRICTIONS.

SHEET TITLE

Exterior Elevations

DRAWN: Author
SCALE: 1/4" = 1'-0"
STATUS: Back Check
DATE: 04-28-10
FILE: S:\Nmarble\Hoffman\Hoffman Central Print.rvt
JOB: 491
SHEET NUMBER:

A3.01

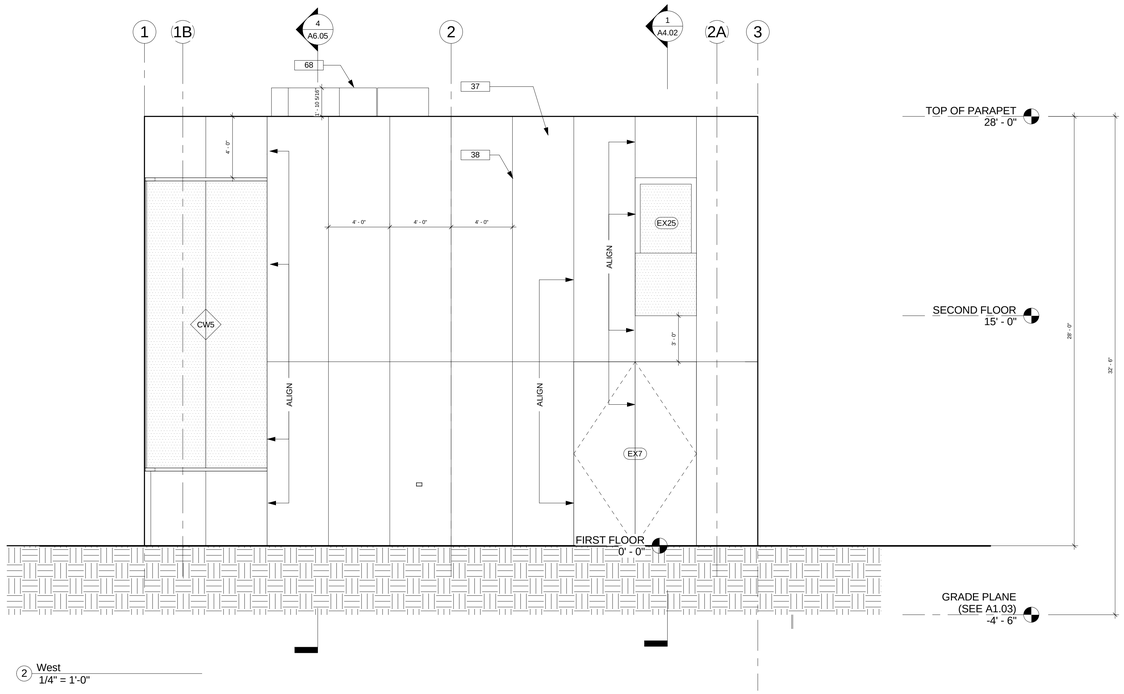

2 West
1/4" = 1'-0"

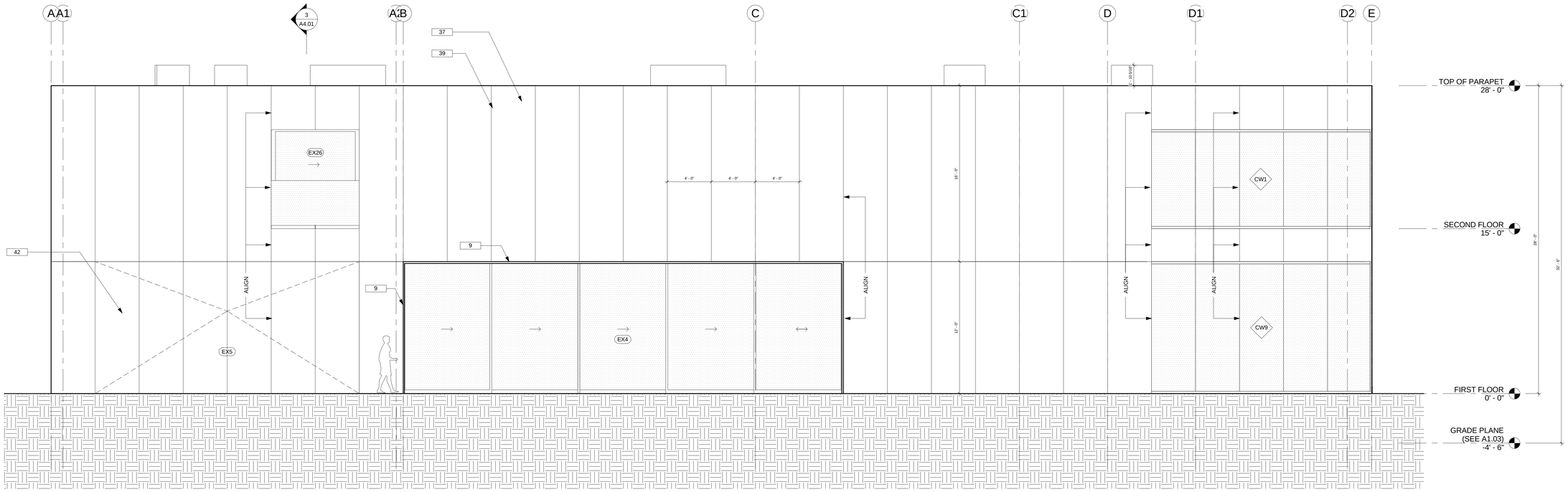

1 South
1/4" = 1'-0"

1 (E) FLOW LINE / CONCRETE CULVERT
2 (N) TREE
4 FIRE TRUCK TURNAROUND
7 BUILT IN STORAGE SHELVING
8 TERRAZZO FLOORING
9 METAL FRAME PER STRUCTURAL, FINISH TO MATCH WHITE EXTERIOR METAL PANEL OF BUILDING
10 KITCHEN BY OTHERS
11 CASEWORK
12 KITCHEN ISLAND PER KITCHEN DRAWINGS
14 TELEVISION BY OWNER
15 GAS FIREPLACE
18 WATER HEATER
19 SHOWER BENCH
20 CLEAR GLASS RAIL (42")
21 ELEVATOR MECHANICAL EQUIPMENT
22 JACUZZI BATHTUB
28 GYPSUM WALL BOARD
30 DEHUMIDIFIER IN CLOSET
31 EXPOSED STEEL COLUMN PER STRUCTURAL, PAINTED (TYP.)
32 SINGLE GLAZED TEMPERED SLIDING DOOR SYSTEM, FLEETWOOD OR EQUAL
33 OPERABLE SKYLIGHT - W/ 4" CURB ABOVE ROOF
34 ROOF DRAIN TYP.
35 WALL SAFE
36 1 HOUR RATED WALL
37 METAL PANEL CLADDING SYSTEM KYNAR PAINTED WHITE
38 CURTAIN WALL, SEE CURTAIN WALL SCHEDULE
39 JOINT OF METAL PANEL SYSTEM, TYP
40 DOOR, SEE DOOR SCHEDULE
42 FLIP UP GARAGE DOOR CLAD IN METAL PANEL SYSTEM SIM. TO EXTERIOR OF BUILDING
43 1/2" BASE REVEAL
45 CLOSET-POLE AND SHELF
46 BATHTUB
47 PREWIRE FOR FUTURE PHOTOVOLTAIC PANELS
48 PERMEABLE GRASS PAVING SYSTEM
49 (N) FIRE HYDRANT
50 (N) CONCRETE RETAINING WALL
54 ART WALL
55 SLIDING DOOR POCKET
56 KNEESPACE BELOW
57 FILE CABINETS BELOW, LATERAL LEGAL
58 SHELVING, EUROCONCEPTS AIKO OR EQUAL
59 ROLLING TABLE BY OWNER
60 4" THICK ART DISPLAY LEDGE / HEARTH, CAESARSTONE "CONCRETE"
61 ELECTRICAL SUB PANEL, SEE ELECTRICAL DRAWINGS
63 TELEPHONE / SECURITY / LIGHTING CONTROL PANELS
66 ELECTRICAL OUTLET - SEE ELECTRICAL DRAWINGS
67 METAL REGLET IN TERRAZZO FLOORING
68 ROOFTOP MECHANICAL EQUIPMENT PER MECHANICAL DRAWINGS
69 YELLOW GLASS
71 MOTORIZED ROLL DOWN SHADE
72 GLASS
73 TILE
74 BACKLIT MIRROR HELD OFF OF WALL BEHIND
75 ELECTRICAL EQUIPMENT - SEE ELECTRICAL DRAWINGS
76 RED GLASS
77 RETURN AIR LINEAR DIFFUSER - SEE MECHANICAL DRAWINGS
78 LIGHTING CONTROL KEYPAD - SEE ELECTRICAL DRAWINGS
80 DOOR - ELECTIRCALLY OPERATED - SEE DOOR SCHEDULE
81 LAMINATE COUNTERTOP
82 LIGHTING FIXTURE, SEE LIGHTING DRAWINGS FOR TYPE
83 MECHANICAL REGISTER, SEE MECHANICAL DRAWINGS FOR TYPE
C-4 CASEWORK- MSTR BDRM
C-7 CASEWORK- ART STORAGE
C-8 CASEWORK- LIVING ROOM
CONC EXPOSED CONCRETE, SEALED
P PAINT
S-1 TERRAZZO
S-2 CAESARSTONE - CONCRETE

STEVEN EHRLICH
Architects
10865 WASHINGTON BLVD.
CULVER CITY, 90232.3600
TEL 310.838.9700
FAX 310.838.9737
WWW.S-EHRLICH.COM

PROJECT

Hoffman Castleman Residence

1445 El Bosque Ct, Pacific Palisades, CA

CONSULTANTS

NO.	DATE	REVISION

THIS DRAWING AND THE DESIGNS, ARRANGEMENTS, DEPICTIONS, IDEAS AND OTHER INFORMATION CONTAINED HEREIN CONSTITUTE UNPUBLISHED WORK OF STEVEN EHRLICH ARCHITECTS AND SHALL REMAIN PROPERTY OF STEVEN EHRLICH ARCHITECTS IN PERPETUITY. NO PART THEREOF SHALL BE REPRODUCED, COPIED, DISCLOSED, DISTRIBUTED, SOLD, PUBLISHED OR OTHERWISE USED IN ANYWAY WITHOUT THE ADVANCED EXPRESS WRITTEN CONSENT OF STEVEN EHRLICH ARCHITECTS. VISUAL CONTACT WITH THE ABOVE DRAWINGS, OR ANY PART THEREOF SHALL CONSTITUE CONCLUSIVE EVIDENCE OF ACCEPTANCE OF THESE RESTRICTIONS.

SHEET TITLE

Exterior Elevations

DRAWN: Author
SCALE: 1/4" = 1'-0"
STATUS: Back Check
DATE: 04-28-10
FILE: S:\Nmarble\Hoffman\Hoffman Central Print.rvt
JOB: 491
SHEET NUMBER:

A3.02

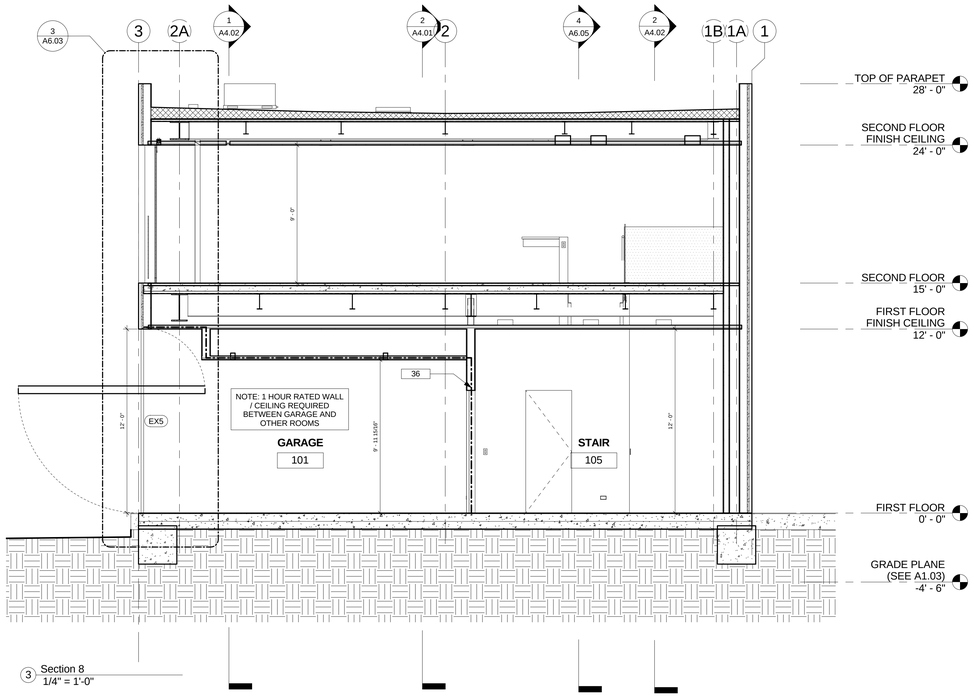

3 Section 8
1/4" = 1'-0"

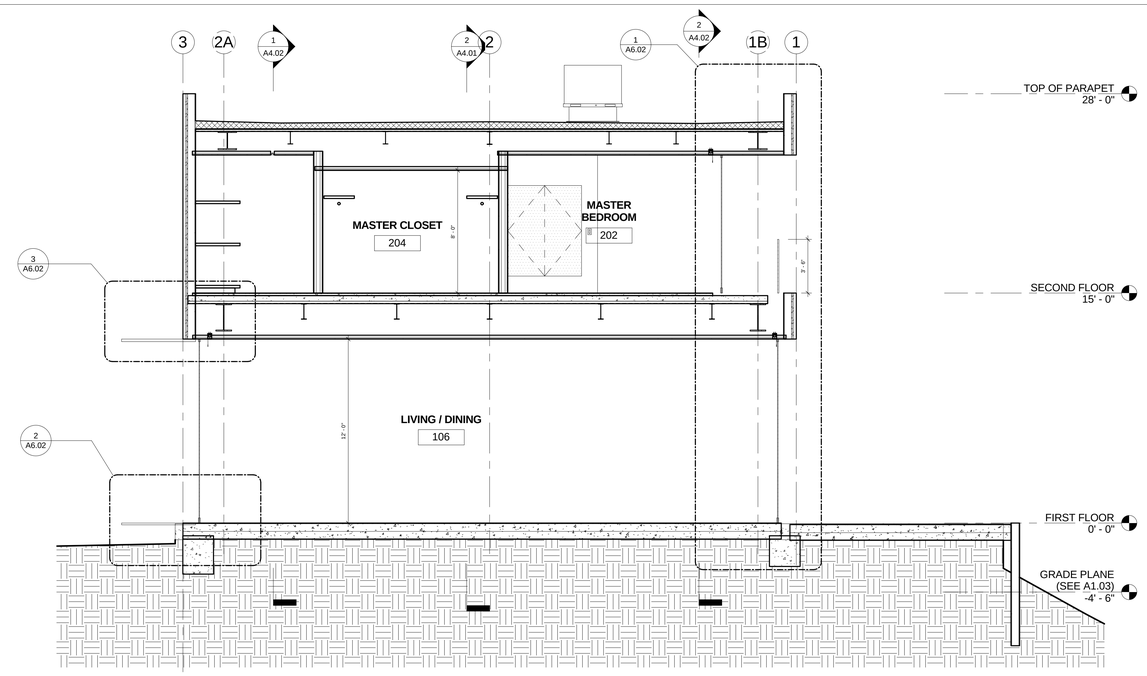

1 Section 1
1/4" = 1'-0"

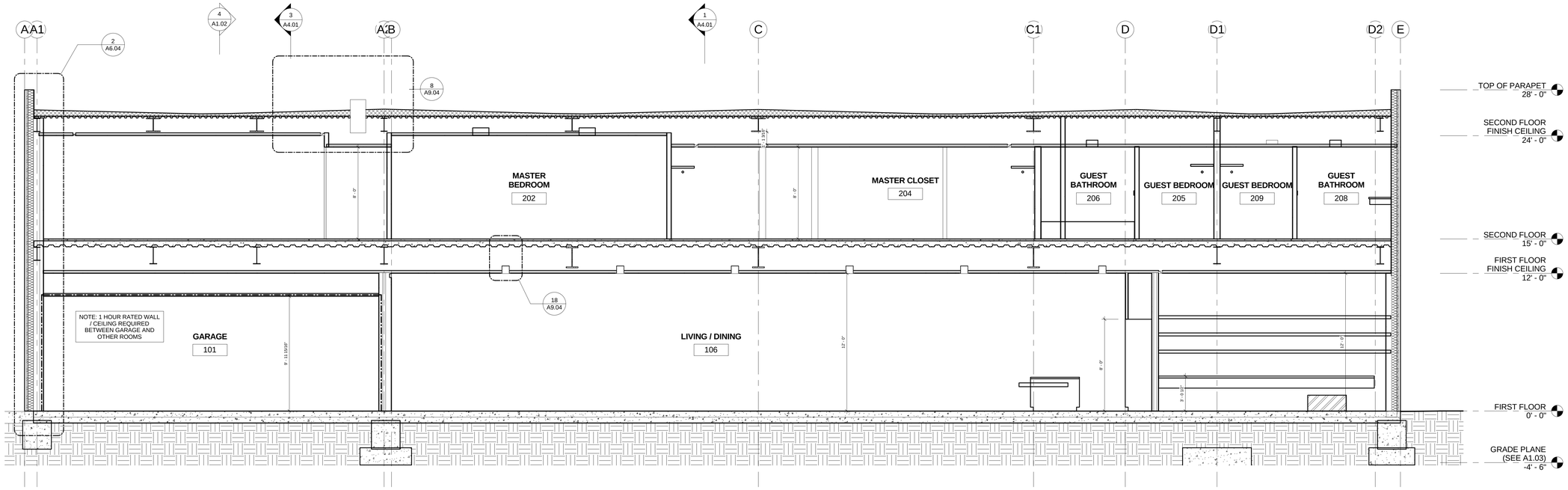

2 Section 2
1/4" = 1'-0"

1 (E) FLOW LINE / CONCRETE CULVERT
2 (N) TREE
4 FIRE TRUCK TURNAROUND
7 BUILT IN STORAGE SHELVING
8 TERRAZZO FLOORING
9 METAL FRAME PER STRUCTURAL, FINISH TO MATCH WHITE EXTERIOR METAL PANEL OF BUILDING
10 KITCHEN BY OTHERS
11 CASEWORK
12 KITCHEN ISLAND PER KITCHEN DRAWINGS
14 TELEVISION BY OWNER
15 GAS FIREPLACE
18 WATER HEATER
19 SHOWER BENCH
20 CLEAR GLASS RAIL (42")
21 ELEVATOR MECHANICAL EQUIPMENT
22 JACUZZI BATHTUB
28 GYPSUM WALL BOARD
30 DEHUMIDIFIER IN CLOSET
31 EXPOSED STEEL COLUMN PER STRUCTURAL, PAINTED (TYP.)
32 SINGLE GLAZED TEMPERED SLIDING DOOR SYSTEM, FLEETWOOD OR EQUAL
33 OPERABLE SKYLIGHT - W/ 4" CURB ABOVE ROOF
34 ROOF DRAIN TYP.
35 WALL SAFE
36 1 HOUR RATED WALL
37 METAL PANEL CLADDING SYSTEM KYNAR PAINTED WHITE
38 CURTAIN WALL, SEE CURTAIN WALL SCHEDULE
39 JOINT OF METAL PANEL SYSTEM, TYP
40 DOOR, SEE DOOR SCHEDULE
42 FLIP UP GARAGE DOOR CLAD IN METAL PANEL SYSTEM SIM. TO EXTERIOR OF BUILDING
43 1/2" BASE REVEAL
45 CLOSET-POLE AND SHELF
46 BATHTUB
47 PREWIRE FOR FUTURE PHOTOVOLTAIC PANELS
48 PERMEABLE GRASS PAVING SYSTEM
49 (N) FIRE HYDRANT
50 (N) CONCRETE RETAINING WALL
54 ART WALL
55 SLIDING DOOR POCKET
56 KNEESPACE BELOW
57 FILE CABINETS BELOW, LATERAL LEGAL
58 SHELVING, EUROCONCEPTS AIKO OR EQUAL
59 ROLLING TABLE BY OWNER
60 4" THICK ART DISPLAY LEDGE / HEARTH, CAESARSTONE "CONCRETE"
61 ELECTRICAL SUB PANEL, SEE ELECTRICAL DRAWINGS
63 TELEPHONE / SECURITY / LIGHTING CONTROL PANELS
66 ELECTRICAL OUTLET - SEE ELECTRICAL DRAWINGS
67 METAL REGLET IN TERRAZZO FLOORING
68 ROOFTOP MECHANICAL EQUIPMENT PER MECHANICAL DRAWINGS
69 YELLOW GLASS
71 MOTORIZED ROLL DOWN SHADE
72 GLASS
73 TILE
74 BACKLIT MIRROR HELD OFF OF WALL BEHIND
75 ELECTRICAL EQUIPMENT - SEE ELECTRICAL DRAWINGS
76 RED GLASS
77 RETURN AIR LINEAR DIFFUSER - SEE MECHANICAL DRAWINGS
78 LIGHTING CONTROL KEYPAD - SEE ELECTRICAL DRAWINGS
80 DOOR - ELECTIRCALLY OPERATED - SEE DOOR SCHEDULE
81 LAMINATE COUNTERTOP
82 LIGHTING FIXTURE, SEE LIGHTING DRAWINGS FOR TYPE
83 MECHANICAL REGISTER, SEE MECHANICAL DRAWINGS FOR TYPE
C-4 CASEWORK- MSTR BDRM
C-7 CASEWORK- ART STORAGE
C-8 CASEWORK- LIVING ROOM
CO CONCRETE, SEALED
NC
P PAINT
S-1 TERRAZZO
S-2 CAESARSTONE - CONCRETE

STEVEN EHRLICH Architects
10865 WASHINGTON BLVD.
CULVER CITY, 90232.3600
TEL 310.838.9700
FAX 310.838.9737
WWW.S-EHRLICH.COM

PROJECT

Hoffman Castleman Residence

1445 El Bosque Ct, Pacific Palisades, CA

CONSULTANTS

NO.	DATE	REVISION

THIS DRAWING AND THE DESIGNS, ARRANGEMENTS, DEPICTIONS, IDEAS AND OTHER INFORMATION CONTAINED HEREIN CONSTITUTE UNPUBLISHED WORK OF STEVEN EHRLICH ARCHITECTS AND SHALL REMAIN PROPERTY OF STEVEN EHRLICH ARCHITECTS IN PERPETUITY. NO PART THEREOF SHALL BE REPRODUCED, COPIED, DISCLOSED, DISTRIBUTED, SOLD, PUBLISHED OR OTHERWISE USED IN ANYWAY WITHOUT THE ADVANCED EXPRESS WRITTEN CONSENT OF STEVEN EHRLICH ARCHITECTS. VISUAL CONTACT WITH THE ABOVE DRAWINGS, OR ANY PART THEREOF, SHALL CONSTITUE CONCLUSIVE EVIDENCE OF ACCEPTANCE OF THESE RESTRICTIONS.

SHEET TITLE

Building Sections

DRAWN:	Author
SCALE:	1/4" = 1'-0"
STATUS:	Back Check
DATE:	04-28-10
FILE:	S:\Nmarble\Hoffman\Hoffman Central Print.rvt
JOB:	491

SHEET NUMBER:

A4.01

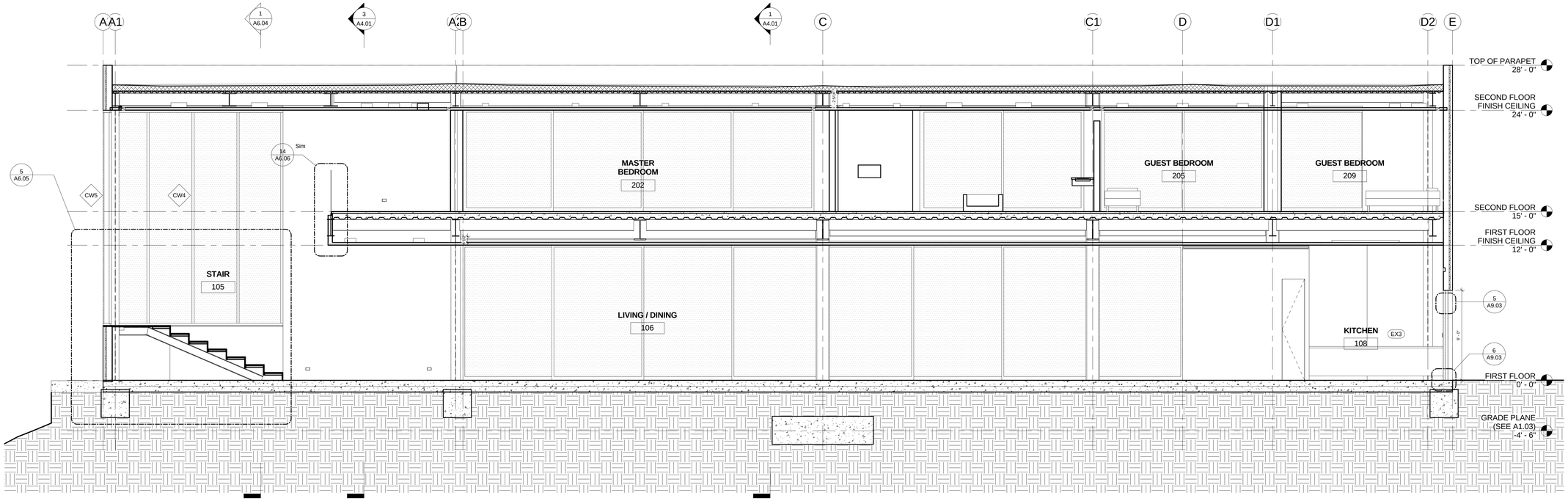

2 Section 5
1/4" = 1'-0"

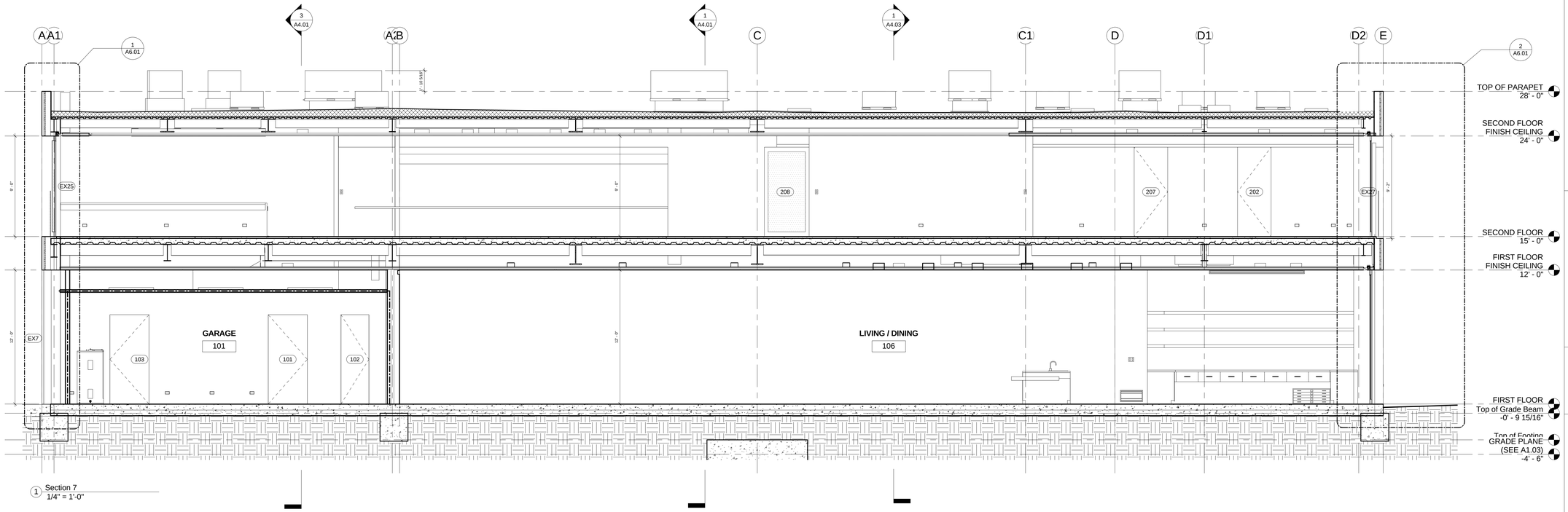

1 Section 7
1/4" = 1'-0"

1 (E) FLOW LINE / CONCRETE CULVERT
2 (N) TREE
4 FIRE TRUCK TURNAROUND
7 BUILT IN STORAGE SHELVING
8 TERRAZZO FLOORING
9 METAL FRAME PER STRUCTURAL, FINISH TO MATCH WHITE EXTERIOR METAL PANEL OF BUILDING
10 KITCHEN BY OTHERS
11 CASEWORK
12 KITCHEN ISLAND PER KITCHEN DRAWINGS
14 TELEVISION BY OWNER
15 GAS FIREPLACE
18 WATER HEATER
19 SHOWER BENCH
20 CLEAR GLASS RAIL (42")
21 ELEVATOR MECHANICAL EQUIPMENT
22 JACUZZI BATHTUB
28 GYPSUM WALL BOARD
30 DEHUMIDIFIER IN CLOSET
31 EXPOSED STEEL COLUMN PER STRUCTURAL, PAINTED (TYP.)
32 SINGLE GLAZED TEMPERED SLIDING DOOR SYSTEM, FLEETWOOD OR EQUAL
33 OPERABLE SKYLIGHT - W/ 4" CURB ABOVE ROOF
34 ROOF DRAIN TYP.
35 WALL SAFE
36 1 HOUR RATED WALL
37 METAL PANEL CLADDING SYSTEM KYNAR PAINTED WHITE
38 CURTAIN WALL, SEE CURTAIN WALL SCHEDULE
39 JOINT OF METAL PANEL SYSTEM, TYP
40 DOOR, SEE DOOR SCHEDULE
42 FLIP UP GARAGE DOOR CLAD IN METAL PANEL SYSTEM SIM. TO EXTERIOR OF BUILDING
43 1/2" BASE REVEAL
45 CLOSET-POLE AND SHELF
46 BATHTUB
47 PREWIRE FOR FUTURE PHOTOVOLTAIC PANELS
48 PERMEABLE GRASS PAVING SYSTEM
49 (N) FIRE HYDRANT
50 (N) CONCRETE RETAINING WALL
54 ART WALL
55 SLIDING DOOR POCKET
56 KNEESPACE BELOW
57 FILE CABINETS BELOW, LATERAL LEGAL
58 SHELVING, EUROCONCEPTS AIKO OR EQUAL
59 ROLLING TABLE BY OWNER
60 4" THICK ART DISPLAY LEDGE / HEARTH, CAESARSTONE "CONCRETE"
61 ELECTRICAL SUB PANEL, SEE ELECTRICAL DRAWINGS
63 TELEPHONE / SECURITY / LIGHTING CONTROL PANELS
66 ELECTRICAL OUTLET - SEE ELECTRICAL DRAWINGS
67 METAL REGLET IN TERRAZZO FLOORING
68 ROOFTOP MECHANICAL EQUIPMENT PER MECHANICAL DRAWINGS
69 YELLOW GLASS
71 MOTORIZED ROLL DOWN SHADE
72 GLASS
73 TILE
74 BACKLIT MIRROR HELD OFF OF WALL BEHIND
75 ELECTRICAL EQUIPMENT - SEE ELECTRICAL DRAWINGS
76 RED GLASS
77 RETURN AIR LINEAR DIFFUSER - SEE MECHANICAL DRAWINGS
78 LIGHTING CONTROL KEYPAD - SEE ELECTRICAL DRAWINGS
80 DOOR - ELECTIRCALLY OPERATED - SEE DOOR SCHEDULE
81 LAMINATE COUNTERTOP
82 LIGHTING FIXTURE, SEE LIGHTING DRAWINGS FOR TYPE
83 MECHANICAL REGISTER, SEE MECHANICAL DRAWINGS FOR TYPE
C-4 CASEWORK- MSTR BDRM
C-7 CASEWORK- ART STORAGE
C-8 CASEWORK- LIVING ROOM
CONC EXPOSED CONCRETE, SEALED
P PAINT
S-1 TERRAZZO
S-2 CAESARSTONE - CONCRETE

STEVEN EHRLICH Architects
10865 WASHINGTON BLVD.
CULVER CITY, 90232.3600
TEL 310.838.9700
FAX 310.838.9737
WWW.S-EHRLICH.COM

PROJECT

Hoffman Castleman Residence

1445 El Bosque Ct, Pacific Palisades, CA

CONSULTANTS

NO.	DATE	REVISION

THIS DRAWING AND THE DESIGNS, ARRANGEMENTS, DEPICTIONS, IDEAS AND OTHER INFORMATION CONTAINED HEREIN CONSTITUTE UNPUBLISHED WORK OF STEVEN EHRLICH ARCHITECTS AND SHALL REMAIN PROPERTY OF STEVEN EHRLICH ARCHITECTS IN PERPETUITY. NO PART THEREOF SHALL BE REPRODUCED, COPIED, DISCLOSED, DISTRIBUTED, SOLD, PUBLISHED OR OTHERWISE USED IN ANYWAY WITHOUT THE ADVANCED EXPRESS WRITTEN CONSENT OF STEVEN EHRLICH ARCHITECTS. VISUAL CONTACT WITH THE ABOVE DRAWINGS, OR ANY PART THEREOF, SHALL CONSTITUE CONCLUSIVE EVIDENCE OF ACCEPTANCE OF THESE RESTRICTIONS.

SHEET TITLE

Building Sections

DRAWN: Author
SCALE: 1/4" = 1'-0"
STATUS: Back Check
DATE: 04-28-10
FILE: S:\Nmarble\Hoffman\Hoffman Central Print.rvt
JOB: 491
SHEET NUMBER:

A4.02

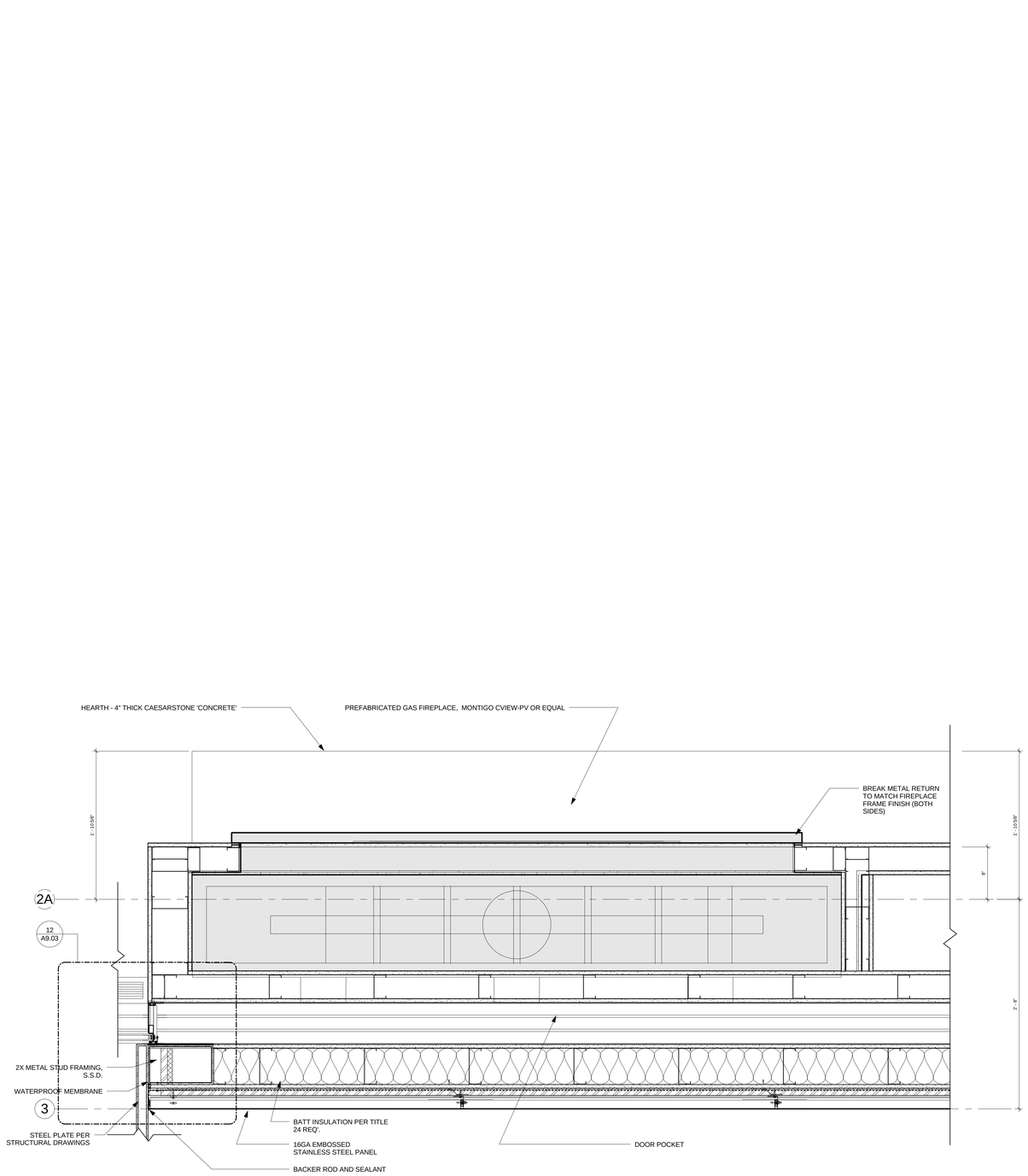

2 FIREPLACE PLAN
1 1/2" = 1'-0"

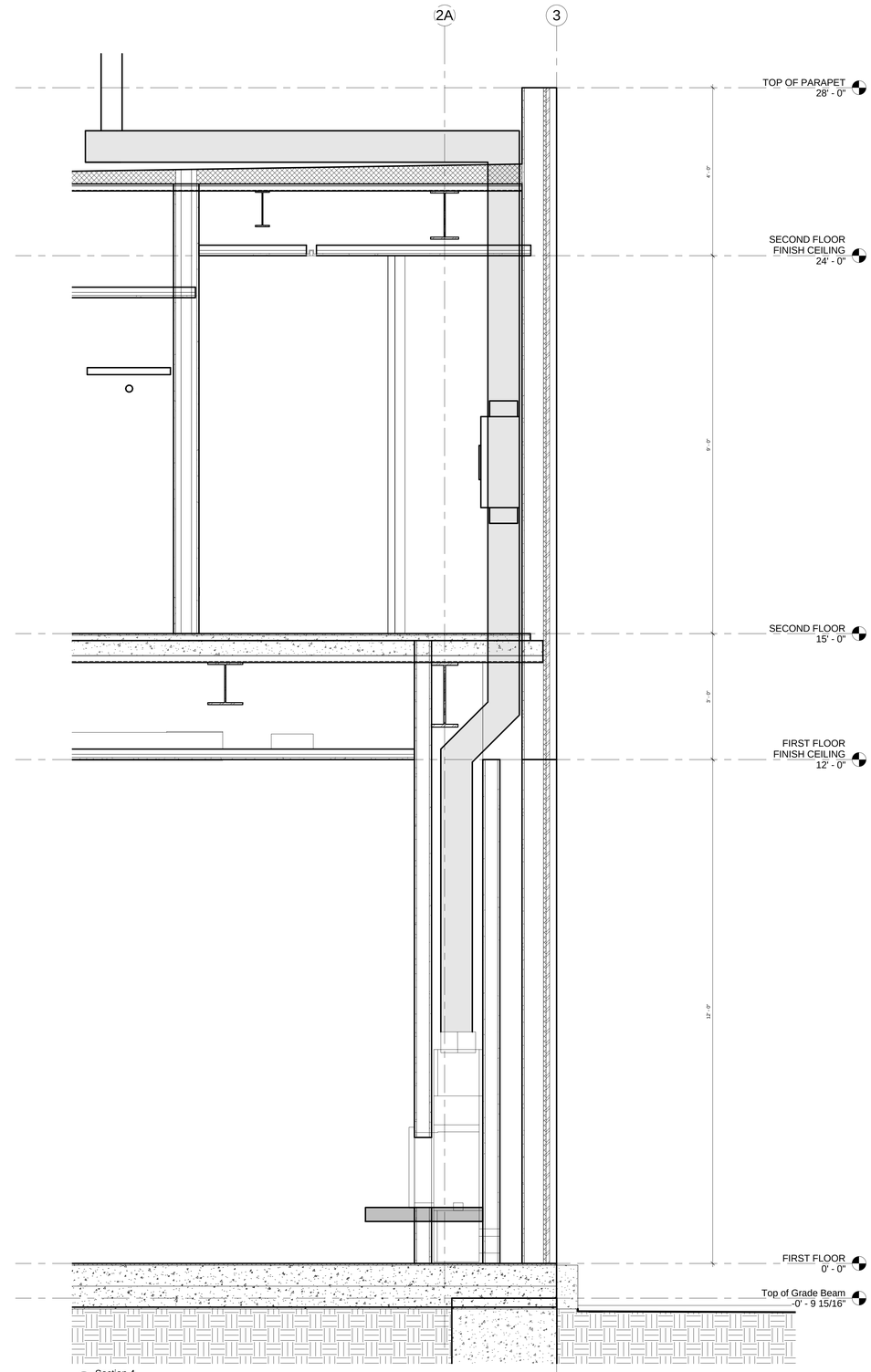

1 Section 4
3/4" = 1'-0"

1 (E) FLOW LINE / CONCRETE CULVERT
2 (N) TREE
4 FIRE TRUCK TURNAROUND
7 BUILT IN STORAGE SHELVING
8 TERRAZZO FLOORING
9 METAL FRAME PER STRUCTURAL, FINISH TO MATCH WHITE EXTERIOR METAL PANEL OF BUILDING
10 KITCHEN BY OTHERS
11 CASEWORK
12 KITCHEN ISLAND PER KITCHEN DRAWINGS
14 TELEVISION BY OWNER
15 GAS FIREPLACE
18 WATER HEATER
19 SHOWER BENCH
20 CLEAR GLASS RAIL (42")
21 ELEVATOR MECHANICAL EQUIPMENT
22 JACUZZI BATHTUB
28 GYPSUM WALL BOARD
30 DEHUMIDIFIER IN CLOSET
31 EXPOSED STEEL COLUMN PER STRUCTURAL, PAINTED (TYP.)
32 SINGLE GLAZED TEMPERED SLIDING DOOR SYSTEM, FLEETWOOD OR EQUAL
33 OPERABLE SKYLIGHT - W/ 4" CURB ABOVE ROOF
34 ROOF DRAIN TYP.
35 WALL SAFE
36 1 HOUR RATED WALL
37 METAL PANEL CLADDING SYSTEM KYNAR PAINTED WHITE
38 CURTAIN WALL, SEE CURTAIN WALL SCHEDULE
39 JOINT OF METAL PANEL SYSTEM, TYP
40 DOOR, SEE DOOR SCHEDULE
42 FLIP UP GARAGE DOOR CLAD IN METAL PANEL SYSTEM SIM. TO EXTERIOR OF BUILDING
43 1/2" BASE REVEAL
45 CLOSET-POLE AND SHELF
46 BATHTUB
47 PREWIRE FOR FUTURE PHOTOVOLTAIC PANELS
48 PERMEABLE GRASS PAVING SYSTEM
49 (N) FIRE HYDRANT
50 (N) CONCRETE RETAINING WALL
54 ART WALL
55 SLIDING DOOR POCKET
56 KNEESPACE BELOW
57 FILE CABINETS BELOW, LATERAL LEGAL
58 SHELVING, EUROCONCEPTS AIKO OR EQUAL
59 ROLLING TABLE BY OWNER
60 4" THICK ART DISPLAY LEDGE / HEARTH, CAESARSTONE "CONCRETE"
61 ELECTRICAL SUB PANEL, SEE ELECTRICAL DRAWINGS
63 TELEPHONE / SECURITY / LIGHTING CONTROL PANELS
66 ELECTRICAL OUTLET - SEE ELECTRICAL DRAWINGS
67 METAL REGLET IN TERRAZZO FLOORING
68 ROOFTOP MECHANICAL EQUIPMENT PER MECHANICAL DRAWINGS
69 YELLOW GLASS
71 MOTORIZED ROLL DOWN SHADE
72 GLASS
73 TILE
74 BACKLIT MIRROR HELD OFF OF WALL BEHIND
75 ELECTRICAL EQUIPMENT - SEE ELECTRICAL DRAWINGS
76 RED GLASS
77 RETURN AIR LINEAR DIFFUSER - SEE MECHANICAL DRAWINGS
78 LIGHTING CONTROL KEYPAD - SEE ELECTRICAL DRAWINGS
80 DOOR - ELECTIRCALLY OPERATED - SEE DOOR SCHEDULE
81 LAMINATE COUNTERTOP
82 LIGHTING FIXTURE, SEE LIGHTING DRAWINGS FOR TYPE
83 MECHANICAL REGISTER, SEE MECHANICAL DRAWINGS FOR TYPE
C-4 CASEWORK- MSTR BDRM
C-7 CASEWORK- ART STORAGE
C-8 CASEWORK- LIVING ROOM
CO NC EXPOSED CONCRETE, SEALED
P PAINT
S-1 TERRAZZO
S-2 CAESARSTONE - CONCRETE

STEVEN EHRLICH Architects
10865 WASHINGTON BLVD.
CULVER CITY, 90232.3600
TEL 310.838.9700
FAX 310.838.9737
WWW.S-EHRLICH.COM

PROJECT

Hoffman Castleman Residence

1445 El Bosque Ct, Pacific Palisades, CA

CONSULTANTS

NO.	DATE	REVISION

THIS DRAWING AND THE DESIGNS, ARRANGEMENTS, DEPICTIONS, IDEAS AND OTHER INFORMATION CONTAINED HEREIN CONSTITUTE UNPUBLISHED WORK OF STEVEN EHRLICH ARCHITECTS AND SHALL REMAIN PROPERTY OF STEVEN EHRLICH ARCHITECTS IN PERPETUITY. NO PART THEREOF SHALL BE REPRODUCED, COPIED, DISCLOSED, DISTRIBUTED, SOLD, PUBLISHED OR OTHERWISE USED IN ANYWAY WITHOUT THE ADVANCED EXPRESS WRITTEN CONSENT OF STEVEN EHRLICH ARCHITECTS. VISUAL CONTACT WITH THE ABOVE DRAWINGS, OR ANY PART THEREOF, SHALL CONSTITUE CONCLUSIVE EVIDENCE OF ACCEPTANCE OF THESE RESTRICTIONS.

SHEET TITLE

Fireplace Drawings

DRAWN:	Author
SCALE:	As indicated
STATUS:	Back Check
DATE:	04-28-10
FILE:	S:\Nmarble\Hoffman\Hoffman Central Print.rvt
JOB:	491

SHEET NUMBER:

A4.03

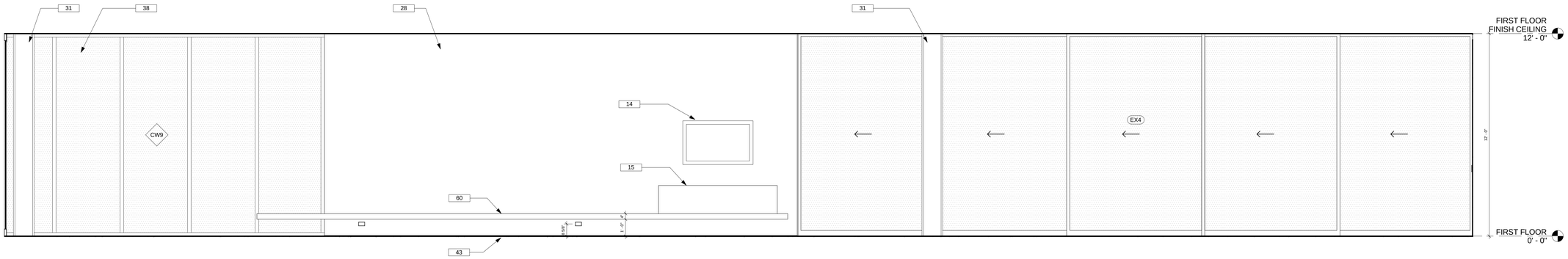

1 106 - South
3/8" = 1'-0"

3 Int Print 3

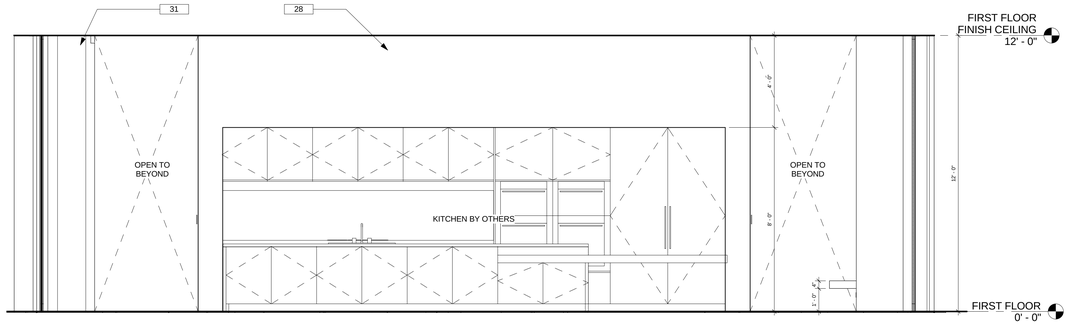

2 106 - East
3/8" = 1'-0"

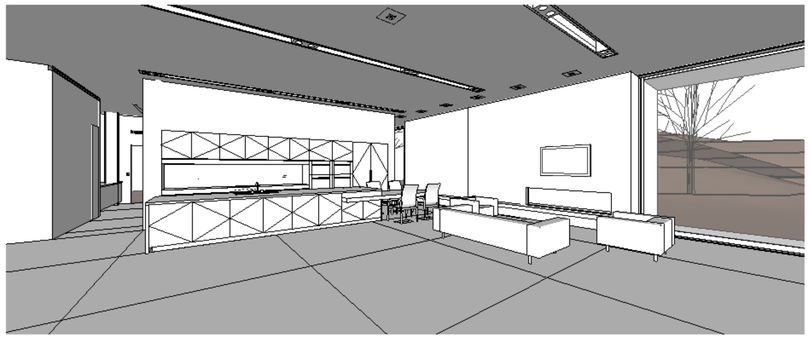

4 Int Print 5

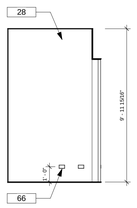

5 102 - East
1/4" = 1'-0"

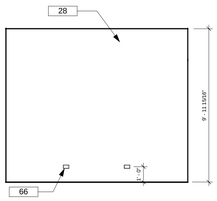

6 102 - North
1/4" = 1'-0"

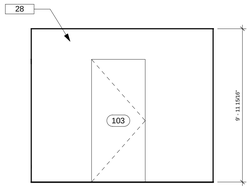

7 102 - South
1/4" = 1'-0"

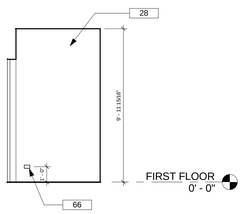

8 102 - West
1/4" = 1'-0"

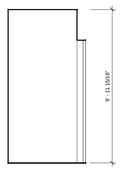

9 103 - East
1/4" = 1'-0"

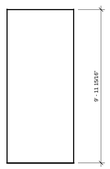

10 103 - North
1/4" = 1'-0"

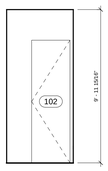

11 103 - South
1/4" = 1'-0"

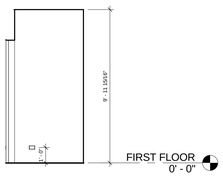

12 103 - West
1/4" = 1'-0"

1 (E) FLOW LINE / CONCRETE CULVERT
2 (N) TREE
4 FIRE TRUCK TURNAROUND
7 BUILT IN STORAGE SHELVING
8 TERRAZZO FLOORING
9 METAL FRAME PER STRUCTURAL, FINISH TO MATCH WHITE EXTERIOR METAL PANEL OF BUILDING
10 KITCHEN BY OTHERS
11 CASEWORK
12 KITCHEN ISLAND PER KITCHEN DRAWINGS
14 TELEVISION BY OWNER
15 GAS FIREPLACE
18 WATER HEATER
19 SHOWER BENCH
20 CLEAR GLASS RAIL (42")
21 ELEVATOR MECHANICAL EQUIPMENT
22 JACUZZI BATHTUB
28 GYPSUM WALL BOARD
30 DEHUMIDIFIER IN CLOSET
31 EXPOSED STEEL COLUMN PER STRUCTURAL, PAINTED (TYP.)
32 SINGLE GLAZED TEMPERED SLIDING DOOR SYSTEM, FLEETWOOD OR EQUAL
33 OPERABLE SKYLIGHT - W/ 4" CURB ABOVE ROOF
34 ROOF DRAIN TYP.
35 WALL SAFE
36 1 HOUR RATED WALL
37 METAL PANEL CLADDING SYSTEM KYNAR PAINTED WHITE
38 CURTAIN WALL, SEE CURTAIN WALL SCHEDULE
39 JOINT OF METAL PANEL SYSTEM, TYP
40 DOOR, SEE DOOR SCHEDULE
42 FLIP UP GARAGE DOOR CLAD IN METAL PANEL SYSTEM SIM. TO EXTERIOR OF BUILDING
43 1/2" BASE REVEAL
45 CLOSET-POLE AND SHELF
46 BATHTUB
47 PREWIRE FOR FUTURE PHOTOVOLTAIC PANELS
48 PERMEABLE GRASS PAVING SYSTEM
49 (N) FIRE HYDRANT
50 (N) CONCRETE RETAINING WALL
54 ART WALL
55 SLIDING DOOR POCKET
56 KNEESPACE BELOW
57 FILE CABINETS BELOW, LATERAL LEGAL
58 SHELVING, EUROCONCEPTS AIKO OR EQUAL
59 ROLLING TABLE BY OWNER
60 4" THICK ART DISPLAY LEDGE / HEARTH, CAESARSTONE "CONCRETE"
61 ELECTRICAL SUB PANEL, SEE ELECTRICAL DRAWINGS
63 TELEPHONE / SECURITY / LIGHTING CONTROL PANELS
66 ELECTRICAL OUTLET - SEE ELECTRICAL DRAWINGS
67 METAL REGLET IN TERRAZZO FLOORING
68 ROOFTOP MECHANICAL EQUIPMENT PER MECHANICAL DRAWINGS
69 YELLOW GLASS
71 MOTORIZED ROLL DOWN SHADE
72 GLASS
73 TILE
74 BACKLIT MIRROR HELD OFF OF WALL BEHIND
75 ELECTRICAL EQUIPMENT - SEE ELECTRICAL DRAWINGS
76 RED GLASS
77 RETURN AIR LINEAR DIFFUSER - SEE MECHANICAL DRAWINGS
78 LIGHTING CONTROL KEYPAD - SEE ELECTRICAL DRAWINGS
80 DOOR - ELECTIRCALLY OPERATED - SEE DOOR SCHEDULE
81 LAMINATE COUNTERTOP
82 LIGHTING FIXTURE, SEE LIGHTING DRAWINGS FOR TYPE
83 MECHANICAL REGISTER, SEE MECHANICAL DRAWINGS FOR TYPE
C-4 CASEWORK- MSTR BDRM
C-7 CASEWORK- ART STORAGE
C-8 CASEWORK- LIVING ROOM
CO NC EXPOSED CONCRETE, SEALED
P PAINT
S-1 TERRAZZO
S-2 CAESARSTONE - CONCRETE

STEVEN EHRLICH
Architects
10865 WASHINGTON BLVD.
CULVER CITY, 90232.3600
TEL 310.838.9700
FAX 310.838.9737
WWW.S-EHRLICH.COM

PROJECT

Hoffman Castleman Residence

1445 El Bosque Ct, Pacific Palisades, CA

CONSULTANTS

NO.	DATE	REVISION

THIS DRAWING AND THE DESIGNS, ARRANGEMENTS, DEPICTIONS, IDEAS AND OTHER INFORMATION CONTAINED HEREIN CONSTITUTE UNPUBLISHED WORK OF STEVEN EHRLICH ARCHITECTS AND SHALL REMAIN PROPERTY OF STEVEN EHRLICH ARCHITECTS IN PERPETUITY. NO PART THEREOF SHALL BE REPRODUCED, COPIED, DISCLOSED, DISTRIBUTED, SOLD, PUBLISHED OR OTHERWISE USED IN ANYWAY WITHOUT THE ADVANCED EXPRESS WRITTEN CONSENT OF STEVEN EHRLICH ARCHITECTS. VISUAL CONTACT WITH THE ABOVE DRAWINGS, OR ANY PART THEREOF, SHALL CONSTITUE CONCLUSIVE EVIDENCE OF ACCEPTANCE OF THESE RESTRICTIONS.

SHEET TITLE

Interior Elevations

DRAWN:	Author
SCALE:	As indicated
STATUS:	Back Check
DATE:	04-28-10
FILE:	S:\Nmarble\Hoffman\Hoffman Central Print.rvt
JOB:	491

SHEET NUMBER:

A5.01

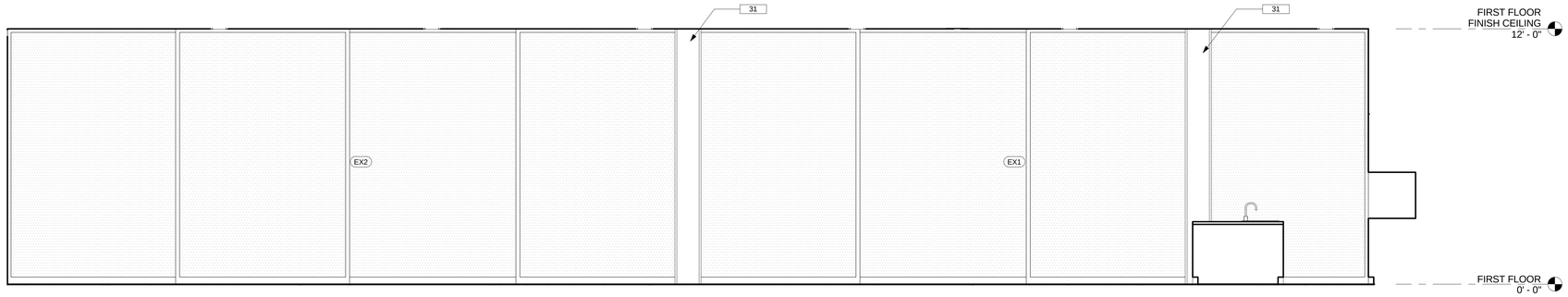

1 106 - North
3/8" = 1'-0"

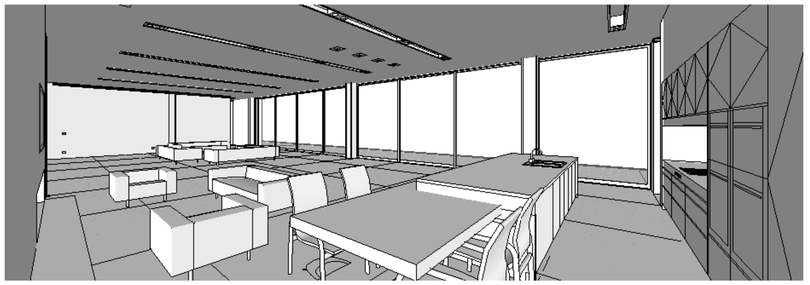

3 Int print 4

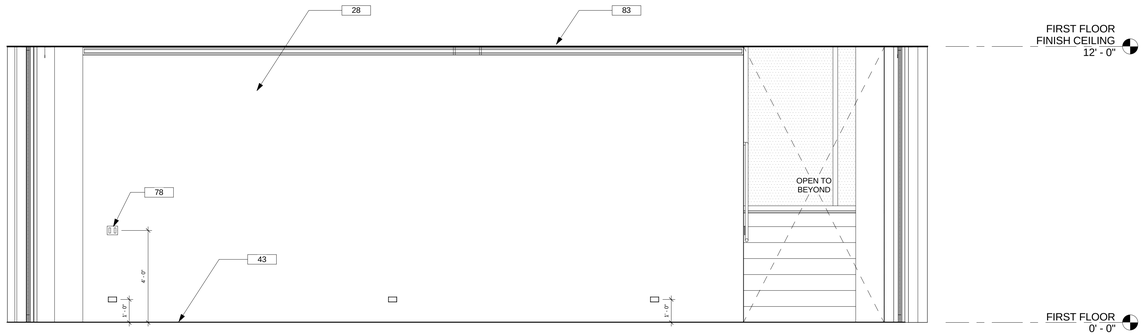

2 106 - West
3/8" = 1'-0"

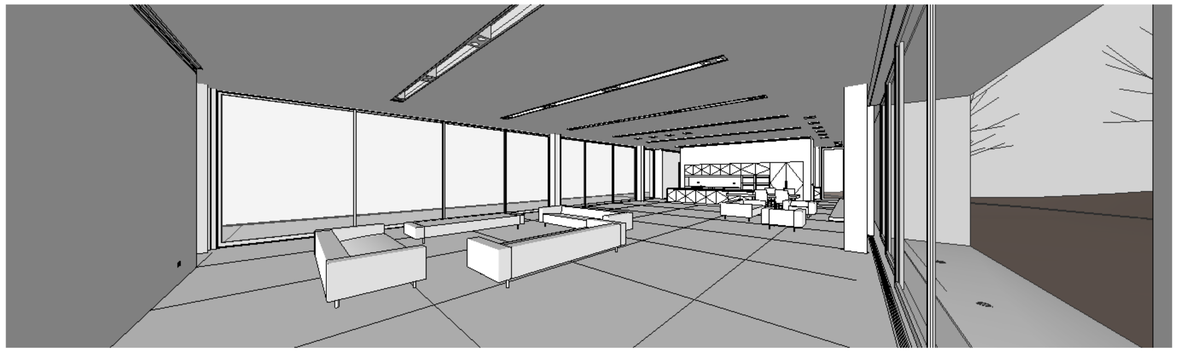

4 Int Print 2

STEVEN EHRLICH
Architects
10865 WASHINGTON BLVD.
CULVER CITY, 90232.3600
TEL 310.838.9700
FAX 310.838.9737
WWW.S-EHRLICH.COM

PROJECT

Hoffman Castleman Residence

1445 El Bosque Ct, Pacific Palisades, CA

CONSULTANTS

NO.	DATE	REVISION

THIS DRAWING AND THE DESIGNS, ARRANGEMENTS, DEPICTIONS, IDEAS AND OTHER INFORMATION CONTAINED HEREIN CONSTITUTE UNPUBLISHED WORK OF STEVEN EHRLICH ARCHITECTS AND SHALL REMAIN PROPERTY OF STEVEN EHRLICH ARCHITECTS IN PERPETUITY. NO PART THEREOF SHALL BE REPRODUCED, COPIED, DISCLOSED, DISTRIBUTED, SOLD, PUBLISHED OR OTHERWISE USED IN ANYWAY WITHOUT THE ADVANCED EXPRESS WRITTEN CONSENT OF STEVEN EHRLICH ARCHITECTS. VISUAL CONTACT WITH THE ABOVE DRAWINGS, OR ANY PART THEREOF, SHALL CONSTITUE CONCLUSIVE EVIDENCE OF ACCEPTANCE OF THESE RESTRICTIONS.

SHEET TITLE

Interior Elevations

DRAWN:	Author
SCALE:	3/8" = 1'-0"
STATUS:	Back Check
DATE:	04-28-10
FILE:	S:\Nmarble\Hoffman\Hoffman Central Print.rvt
JOB:	491

SHEET NUMBER:

A5.02

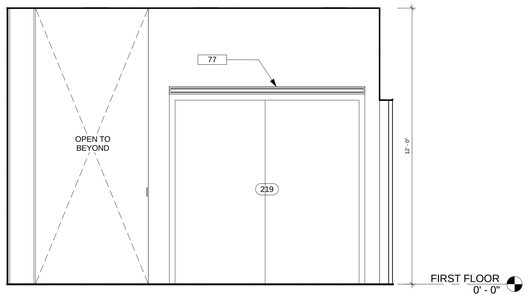

12 105 - East
3/8" = 1'-0"

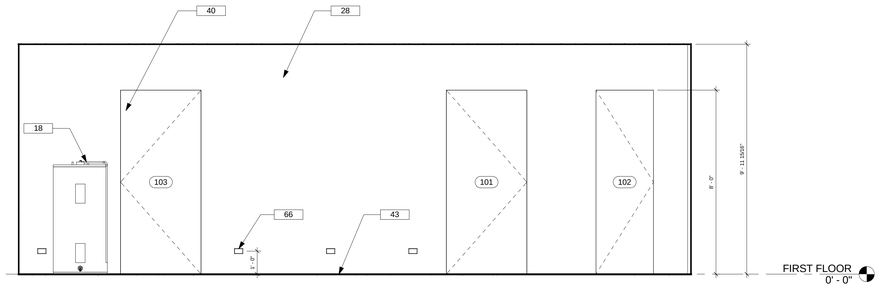

2 101 - North
3/8" = 1'-0"

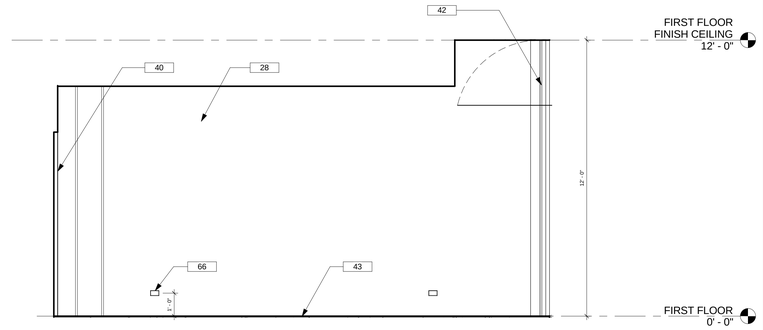

1 101 - East
3/8" = 1'-0"

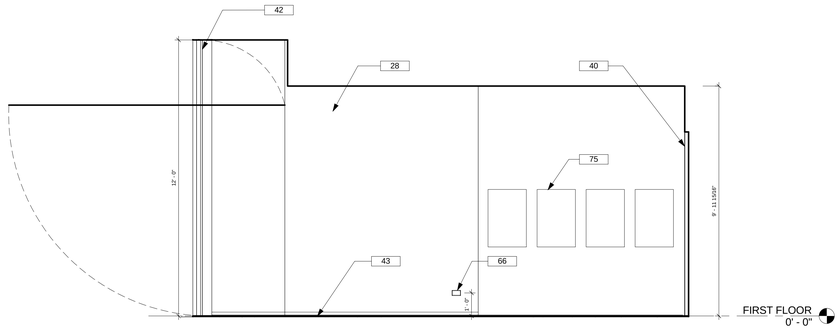

4 101 - West
3/8" = 1'-0"

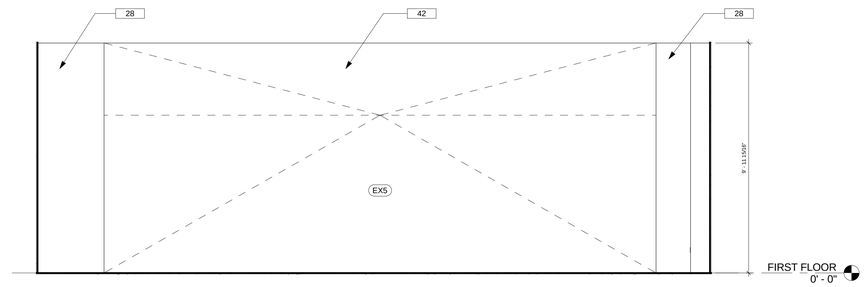

3 101 - South
3/8" = 1'-0"

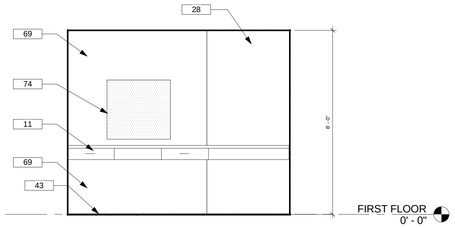

8 104 - West
3/8" = 1'-0"

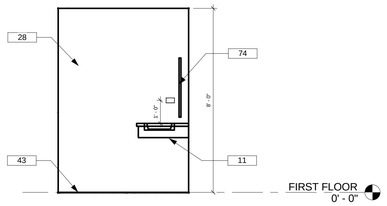

7 104 - South
3/8" = 1'-0"

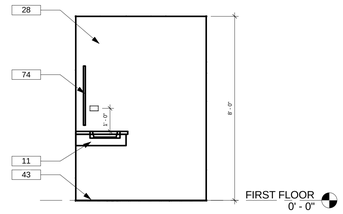

6 104 - North
3/8" = 1'-0"

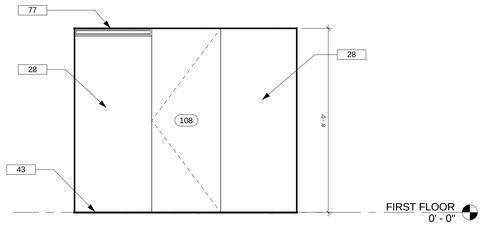

5 104 - East
3/8" = 1'-0"

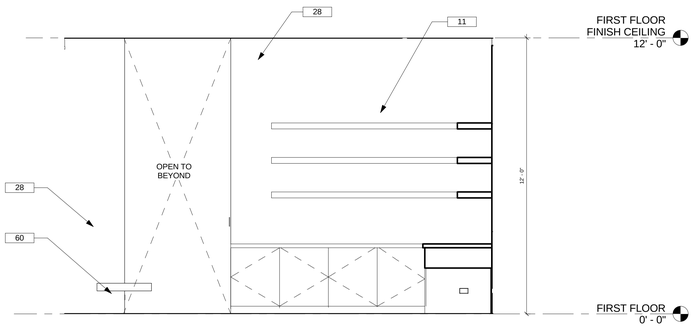

11 107 - West
3/8" = 1'-0"

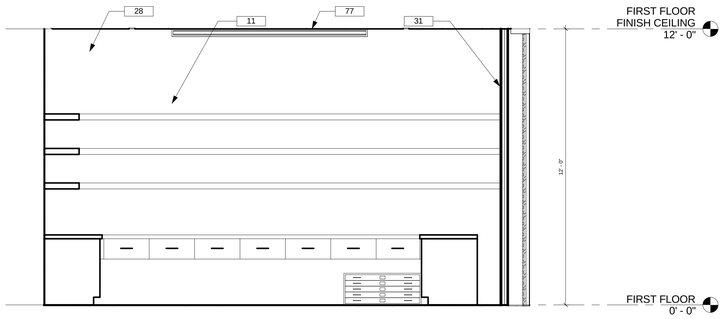

10 107 - North
3/8" = 1'-0"

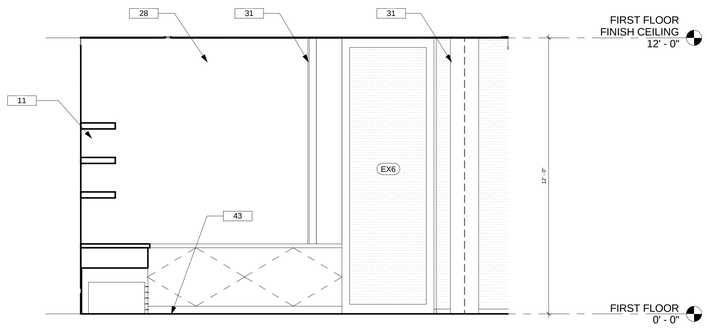

9 107 - East
3/8" = 1'-0"

1 (E) FLOW LINE / CONCRETE CULVERT
2 (N) TREE
4 FIRE TRUCK TURNAROUND
7 BUILT IN STORAGE SHELVING
8 TERRAZZO FLOORING
9 METAL FRAME PER STRUCTURAL, FINISH TO MATCH WHITE EXTERIOR METAL PANEL OF BUILDING
10 KITCHEN BY OTHERS
11 CASEWORK
12 KITCHEN ISLAND PER KITCHEN DRAWINGS
14 TELEVISION BY OWNER
15 GAS FIREPLACE
18 WATER HEATER
19 SHOWER BENCH
20 CLEAR GLASS RAIL (42")
21 ELEVATOR MECHANICAL EQUIPMENT
22 JACUZZI BATHTUB
28 GYPSUM WALL BOARD
30 DEHUMIDIFIER IN CLOSET
31 EXPOSED STEEL COLUMN PER STRUCTURAL, PAINTED (TYP.)
32 SINGLE GLAZED TEMPERED SLIDING DOOR SYSTEM, FLEETWOOD OR EQUAL
33 OPERABLE SKYLIGHT - W/ 4" CURB ABOVE ROOF
34 ROOF DRAIN TYP.
35 WALL SAFE
36 1 HOUR RATED WALL
37 METAL PANEL CLADDING SYSTEM KYNAR PAINTED WHITE
38 CURTAIN WALL, SEE CURTAIN WALL SCHEDULE
39 JOINT OF METAL PANEL SYSTEM, TYP
40 DOOR, SEE DOOR SCHEDULE
42 FLIP UP GARAGE DOOR CLAD IN METAL PANEL SYSTEM SIM. TO EXTERIOR OF BUILDING
43 1/2" BASE REVEAL
45 CLOSET-POLE AND SHELF
46 BATHTUB
47 PREWIRE FOR FUTURE PHOTOVOLTAIC PANELS
48 PERMEABLE GRASS PAVING SYSTEM
49 (N) FIRE HYDRANT
50 (N) CONCRETE RETAINING WALL
54 ART WALL
55 SLIDING DOOR POCKET
56 KNEESPACE BELOW
57 FILE CABINETS BELOW, LATERAL LEGAL
58 SHELVING, EUROCONCEPTS AIKO OR EQUAL
59 ROLLING TABLE BY OWNER
60 4" THICK ART DISPLAY LEDGE / HEARTH, CAESARSTONE "CONCRETE"
61 ELECTRICAL SUB PANEL, SEE ELECTRICAL DRAWINGS
63 TELEPHONE / SECURITY / LIGHTING CONTROL PANELS
66 ELECTRICAL OUTLET - SEE ELECTRICAL DRAWINGS
67 METAL REGLET IN TERRAZZO FLOORING
68 ROOFTOP MECHANICAL EQUIPMENT PER MECHANICAL DRAWINGS
69 YELLOW GLASS
71 MOTORIZED ROLL DOWN SHADE
72 GLASS
73 TILE
74 BACKLIT MIRROR HELD OFF OF WALL BEHIND
75 ELECTRICAL EQUIPMENT - SEE ELECTRICAL DRAWINGS
76 RED GLASS
77 RETURN AIR LINEAR DIFFUSER - SEE MECHANICAL DRAWINGS
78 LIGHTING CONTROL KEYPAD - SEE ELECTRICAL DRAWINGS
80 DOOR - ELECTIRCALLY OPERATED - SEE DOOR SCHEDULE
81 LAMINATE COUNTERTOP
82 LIGHTING FIXTURE, SEE LIGHTING DRAWINGS FOR TYPE
83 MECHANICAL REGISTER, SEE MECHANICAL DRAWINGS FOR TYPE
C-4 CASEWORK- MSTR BDRM
C-7 CASEWORK- ART STORAGE
C-8 CASEWORK- LIVING ROOM
CO NC EXPOSED CONCRETE, SEALED
P PAINT
S-1 TERRAZZO
S-2 CAESARSTONE - CONCRETE

STEVEN EHRLICH Architects
10865 WASHINGTON BLVD.
CULVER CITY, 90232.3600
T E L 310.838.9700
F A X 310.838.9737
W W W . S - E H R L I C H . C O M

PROJECT

Hoffman Castleman Residence

1445 El Bosque Ct, Pacific Palisades, CA

CONSULTANTS

NO.	DATE	REVISION

THIS DRAWING AND THE DESIGNS, ARRANGEMENTS, DEPICTIONS, IDEAS AND OTHER INFORMATION CONTAINED HEREIN CONSTITUTE UNPUBLISHED WORK OF STEVEN EHRLICH ARCHITECTS AND SHALL REMAIN PROPERTY OF STEVEN EHRLICH ARCHITECTS IN PERPETUITY. NO PART THEREOF SHALL BE REPRODUCED, COPIED, DISCLOSED, DISTRIBUTED, SOLD, PUBLISHED OR OTHERWISE USED IN ANYWAY WITHOUT THE ADVANCED EXPRESS WRITTEN CONSENT OF STEVEN EHRLICH ARCHITECTS. VISUAL CONTACT WITH THE ABOVE DRAWINGS, OR ANY PART THEREOF, SHALL CONSTITUE CONCLUSIVE EVIDENCE OF ACCEPTANCE OF THESE RESTRICTIONS.

SHEET TITLE

Interior Elevations

DRAWN:	Author
SCALE:	3/8" = 1'-0"
STATUS:	Back Check
DATE:	04-28-10
FILE:	S:\Nmarble\Hoffman\Hoffman Central Print.rvt
JOB:	491

SHEET NUMBER:

A5.03

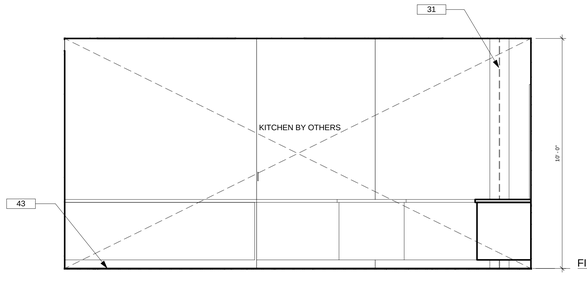

3 108 - North
3/8" = 1'-0"

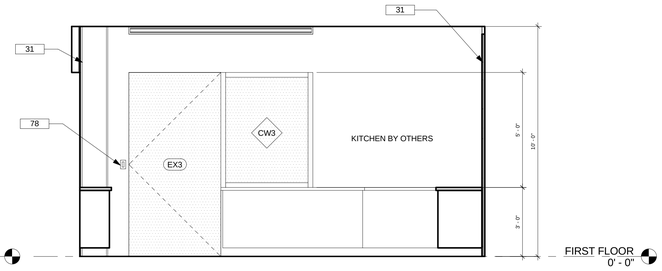

2 108 - East
3/8" = 1'-0"

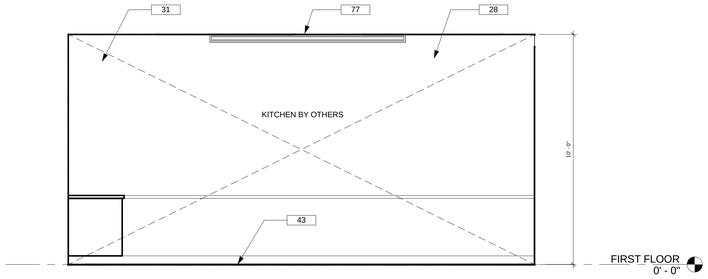

1 108 - South
3/8" = 1'-0"

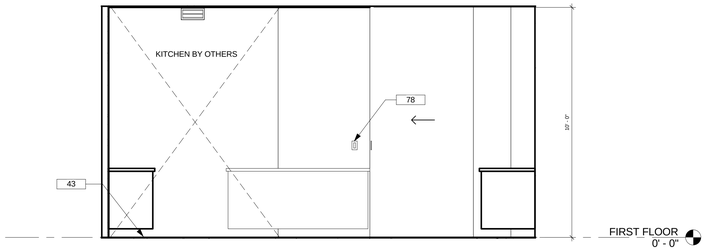

4 108 - West
3/8" = 1'-0"

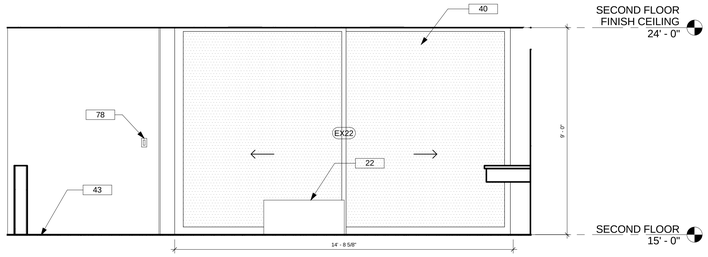

6 210 - North
3/8" = 1'-0"

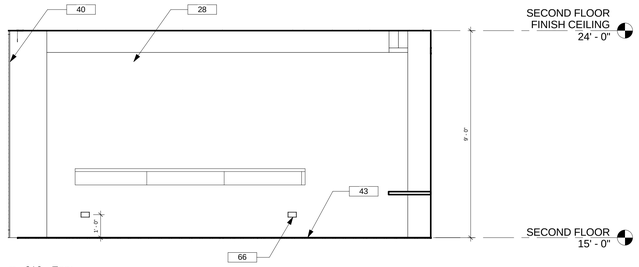

5 210 - East
3/8" = 1'-0"

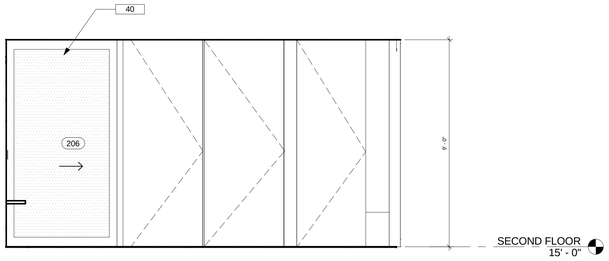

8 210 -West
3/8" = 1'-0"

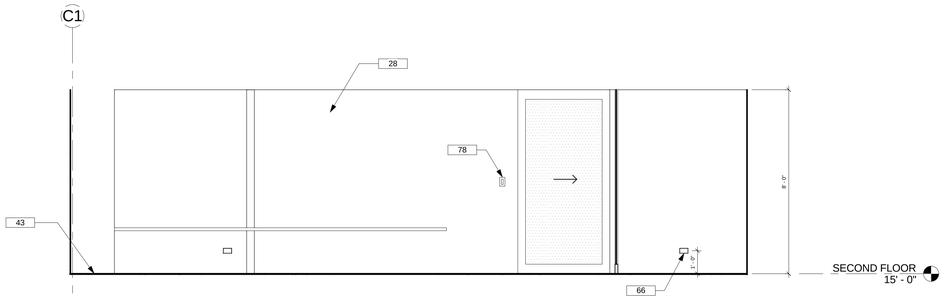

7 210 - South
3/8" = 1'-0"

1 (E) FLOW LINE / CONCRETE CULVERT
2 (N) TREE
4 FIRE TRUCK TURNAROUND
7 BUILT IN STORAGE SHELVING
8 TERRAZZO FLOORING
9 METAL FRAME PER STRUCTURAL, FINISH TO MATCH WHITE EXTERIOR METAL PANEL OF BUILDING
10 KITCHEN BY OTHERS
11 CASEWORK
12 KITCHEN ISLAND PER KITCHEN DRAWINGS
14 TELEVISION BY OWNER
15 GAS FIREPLACE
18 WATER HEATER
19 SHOWER BENCH
20 CLEAR GLASS RAIL (42")
21 ELEVATOR MECHANICAL EQUIPMENT
22 JACUZZI BATHTUB
28 GYPSUM WALL BOARD
30 DEHUMIDIFIER IN CLOSET
31 EXPOSED STEEL COLUMN PER STRUCTURAL, PAINTED (TYP.)
32 SINGLE GLAZED TEMPERED SLIDING DOOR SYSTEM, FLEETWOOD OR EQUAL
33 OPERABLE SKYLIGHT - W/ 4" CURB ABOVE ROOF
34 ROOF DRAIN TYP.
35 WALL SAFE
36 1 HOUR RATED WALL
37 METAL PANEL CLADDING SYSTEM KYNAR PAINTED WHITE
38 CURTAIN WALL, SEE CURTAIN WALL SCHEDULE
39 JOINT OF METAL PANEL SYSTEM, TYP
40 DOOR, SEE DOOR SCHEDULE
42 FLIP UP GARAGE DOOR CLAD IN METAL PANEL SYSTEM SIM. TO EXTERIOR OF BUILDING
43 1/2" BASE REVEAL
45 CLOSET-POLE AND SHELF
46 BATHTUB
47 PREWIRE FOR FUTURE PHOTOVOLTAIC PANELS
48 PERMEABLE GRASS PAVING SYSTEM
49 (N) FIRE HYDRANT
50 (N) CONCRETE RETAINING WALL
54 ART WALL
55 SLIDING DOOR POCKET
56 KNEESPACE BELOW
57 FILE CABINETS BELOW, LATERAL LEGAL
58 SHELVING, EUROCONCEPTS AIKO OR EQUAL
59 ROLLING TABLE BY OWNER
60 4" THICK ART DISPLAY LEDGE / HEARTH, CAESARSTONE "CONCRETE"
61 ELECTRICAL SUB PANEL, SEE ELECTRICAL DRAWINGS
63 TELEPHONE / SECURITY / LIGHTING CONTROL PANELS
66 ELECTRICAL OUTLET - SEE ELECTRICAL DRAWINGS
67 METAL REGLET IN TERRAZZO FLOORING
68 ROOFTOP MECHANICAL EQUIPMENT PER MECHANICAL DRAWINGS
69 YELLOW GLASS
71 MOTORIZED ROLL DOWN SHADE
72 GLASS
73 TILE
74 BACKLIT MIRROR HELD OFF OF WALL BEHIND
75 ELECTRICAL EQUIPMENT - SEE ELECTRICAL DRAWINGS
76 RED GLASS
77 RETURN AIR LINEAR DIFFUSER - SEE MECHANICAL DRAWINGS
78 LIGHTING CONTROL KEYPAD - SEE ELECTRICAL DRAWINGS
80 DOOR - ELECTIRCALLY OPERATED - SEE DOOR SCHEDULE
81 LAMINATE COUNTERTOP
82 LIGHTING FIXTURE, SEE LIGHTING DRAWINGS FOR TYPE
83 MECHANICAL REGISTER, SEE MECHANICAL DRAWINGS FOR TYPE
C-4 CASEWORK- MSTR BDRM
C-7 CASEWORK- ART STORAGE
C-8 CASEWORK- LIVING ROOM
CONC EXPOSED CONCRETE, SEALED
P PAINT
S-1 TERRAZZO
S-2 CAESARSTONE - CONCRETE

STEVEN EHRLICH
Architects
10865 WASHINGTON BLVD.
CULVER CITY, 90232.3600
TEL 310.838.9700
FAX 310.838.9737
WWW.S-EHRLICH.COM

PROJECT

Hoffman Castleman Residence

1445 El Bosque Ct, Pacific Palisades, CA

CONSULTANTS

NO.	DATE	REVISION

THIS DRAWING AND THE DESIGNS, ARRANGEMENTS, DEPICTIONS, IDEAS AND OTHER INFORMATION CONTAINED HEREIN CONSTITUTE UNPUBLISHED WORK OF STEVEN EHRLICH ARCHITECTS AND SHALL REMAIN PROPERTY OF STEVEN EHRLICH ARCHITECTS IN PERPETUITY. NO PART THEREOF SHALL BE REPRODUCED, COPIED, DISCLOSED, DISTRIBUTED, SOLD, PUBLISHED OR OTHERWISE USED IN ANYWAY WITHOUT THE ADVANCED EXPRESS WRITTEN CONSENT OF STEVEN EHRLICH ARCHITECTS. VISUAL CONTACT WITH THE ABOVE DRAWINGS, OR ANY PART THEREOF, SHALL CONSTITUE CONCLUSIVE EVIDENCE OF ACCEPTANCE OF THESE RESTRICTIONS.

SHEET TITLE

Interior Elevations

DRAWN: Author
SCALE: 3/8" = 1'-0"
STATUS: Back Check
DATE: 04-28-10
FILE: S:\Nmarble\Hoffman\Hoffman Central Print.rvt
JOB: 491
SHEET NUMBER:

A5.04

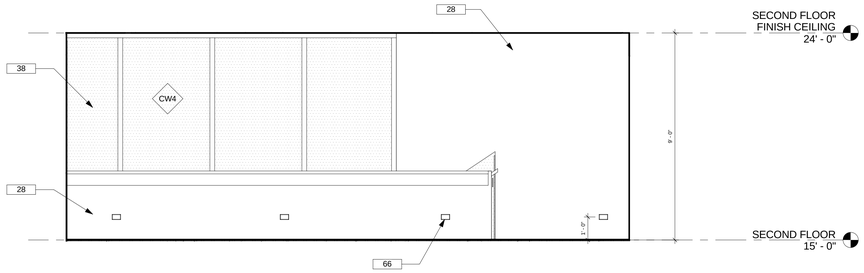

2 201 - North
3/8" = 1'-0"

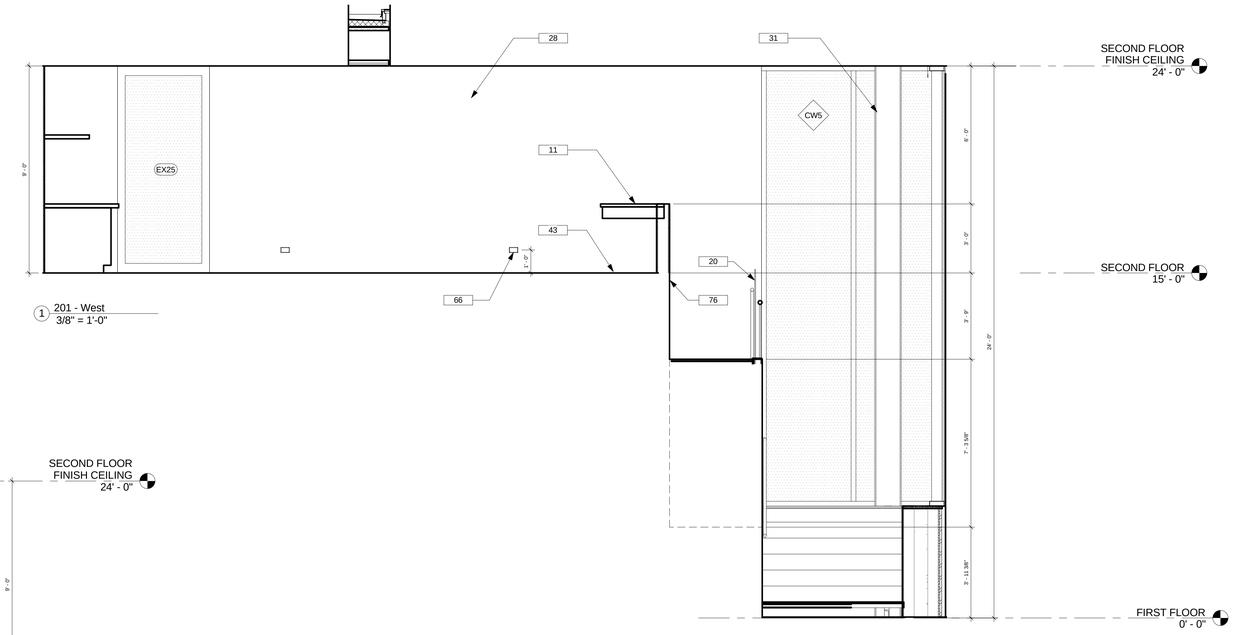

1 201 - West
3/8" = 1'-0"

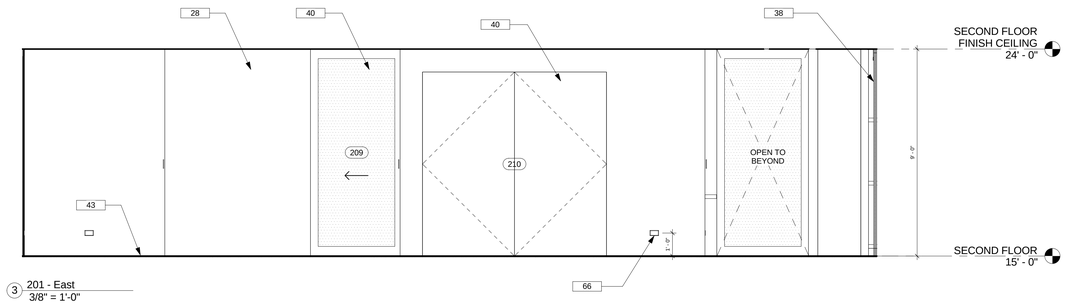

3 201 - East
3/8" = 1'-0"

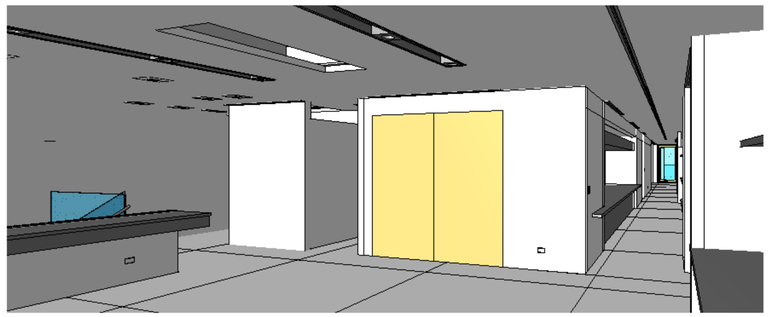

4 3D View 5

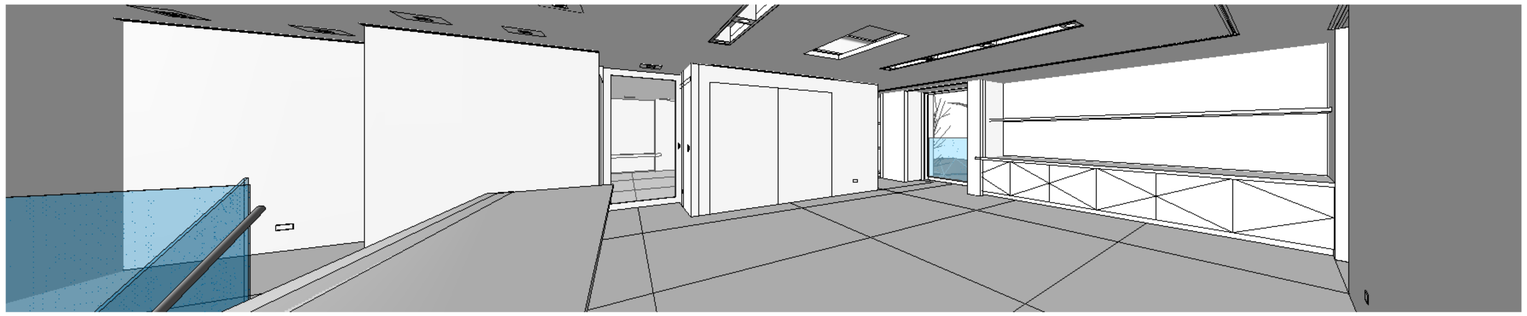

5 Upstairs 1

1 (E) FLOW LINE / CONCRETE CULVERT
2 (N) TREE
4 FIRE TRUCK TURNAROUND
7 BUILT IN STORAGE SHELVING
8 TERRAZZO FLOORING
9 METAL FRAME PER STRUCTURAL, FINISH TO MATCH WHITE EXTERIOR METAL PANEL OF BUILDING
10 KITCHEN BY OTHERS
11 CASEWORK
12 KITCHEN ISLAND PER KITCHEN DRAWINGS
14 TELEVISION BY OWNER
15 GAS FIREPLACE
18 WATER HEATER
19 SHOWER BENCH
20 CLEAR GLASS RAIL (42")
21 ELEVATOR MECHANICAL EQUIPMENT
22 JACUZZI BATHTUB
28 GYPSUM WALL BOARD
30 DEHUMIDIFIER IN CLOSET
31 EXPOSED STEEL COLUMN PER STRUCTURAL, PAINTED (TYP.)
32 SINGLE GLAZED TEMPERED SLIDING DOOR SYSTEM, FLEETWOOD OR EQUAL
33 OPERABLE SKYLIGHT - W/ 4" CURB ABOVE ROOF
34 ROOF DRAIN TYP.
35 WALL SAFE
36 1 HOUR RATED WALL
37 METAL PANEL CLADDING SYSTEM KYNAR PAINTED WHITE
38 CURTAIN WALL, SEE CURTAIN WALL SCHEDULE
39 JOINT OF METAL PANEL SYSTEM, TYP
40 DOOR, SEE DOOR SCHEDULE
42 FLIP UP GARAGE DOOR CLAD IN METAL PANEL SYSTEM SIM. TO EXTERIOR OF BUILDING
43 1/2" BASE REVEAL
45 CLOSET-POLE AND SHELF
46 BATHTUB
47 PREWIRE FOR FUTURE PHOTOVOLTAIC PANELS
48 PERMEABLE GRASS PAVING SYSTEM
49 (N) FIRE HYDRANT
50 (N) CONCRETE RETAINING WALL
54 ART WALL
55 SLIDING DOOR POCKET
56 KNEESPACE BELOW
57 FILE CABINETS BELOW, LATERAL LEGAL
58 SHELVING, EUROCONCEPTS AIKO OR EQUAL
59 ROLLING TABLE BY OWNER
60 4" THICK ART DISPLAY LEDGE / HEARTH, CAESARSTONE "CONCRETE"
61 ELECTRICAL SUB PANEL, SEE ELECTRICAL DRAWINGS
63 TELEPHONE / SECURITY / LIGHTING CONTROL PANELS
66 ELECTRICAL OUTLET - SEE ELECTRICAL DRAWINGS
67 METAL REGLET IN TERRAZZO FLOORING
68 ROOFTOP MECHANICAL EQUIPMENT PER MECHANICAL DRAWINGS
69 YELLOW GLASS
71 MOTORIZED ROLL DOWN SHADE
72 GLASS
73 TILE
74 BACKLIT MIRROR HELD OFF OF WALL BEHIND
75 ELECTRICAL EQUIPMENT - SEE ELECTRICAL DRAWINGS
76 RED GLASS
77 RETURN AIR LINEAR DIFFUSER - SEE MECHANICAL DRAWINGS
78 LIGHTING CONTROL KEYPAD - SEE ELECTRICAL DRAWINGS
80 DOOR - ELECTIRCALLY OPERATED - SEE DOOR SCHEDULE
81 LAMINATE COUNTERTOP
82 LIGHTING FIXTURE, SEE LIGHTING DRAWINGS FOR TYPE
83 MECHANICAL REGISTER, SEE MECHANICAL DRAWINGS FOR TYPE
C-4 CASEWORK- MSTR BDRM
C-7 CASEWORK- ART STORAGE
C-8 CASEWORK- LIVING ROOM
CONC EXPOSED CONCRETE, SEALED
P PAINT
S-1 TERRAZZO
S-2 CAESARSTONE - CONCRETE

STEVEN EHRLICH
Architects
10865 WASHINGTON BLVD.
CULVER CITY, 90232.3600
TEL 310.838.9700
FAX 310.838.9737
WWW.S-EHRLICH.COM

PROJECT

Hoffman Castleman Residence

1445 El Bosque Ct, Pacific Palisades, CA

CONSULTANTS

NO.	DATE	REVISION

THIS DRAWING AND THE DESIGNS, ARRANGEMENTS, DEPICTIONS, IDEAS AND OTHER INFORMATION CONTAINED HEREIN CONSTITUTE UNPUBLISHED WORK OF STEVEN EHRLICH ARCHITECTS AND SHALL REMAIN PROPERTY OF STEVEN EHRLICH ARCHITECTS IN PERPETUITY. NO PART THEREOF SHALL BE REPRODUCED, COPIED, DISCLOSED, DISTRIBUTED, SOLD, PUBLISHED OR OTHERWISE USED IN ANYWAY WITHOUT THE ADVANCED EXPRESS WRITTEN CONSENT OF STEVEN EHRLICH ARCHITECTS. VISUAL CONTACT WITH THE ABOVE DRAWINGS, OR ANY PART THEREOF, SHALL CONSTITUE CONCLUSIVE EVIDENCE OF ACCEPTANCE OF THESE RESTRICTIONS.

SHEET TITLE

Interior Elevations

DRAWN: Author
SCALE: 3/8" = 1'-0"
STATUS: Back Check
DATE: 04-28-10
FILE: S:\Nmarble\Hoffman\Hoffman Central Print.rvt
JOB: 491
SHEET NUMBER:

A5.05

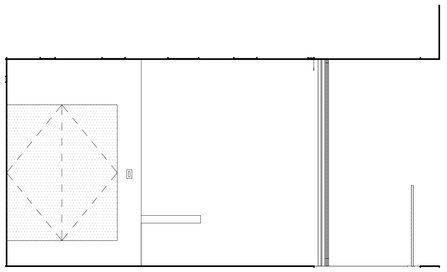

11 Elevation 1 - b
3/8" = 1'-0"

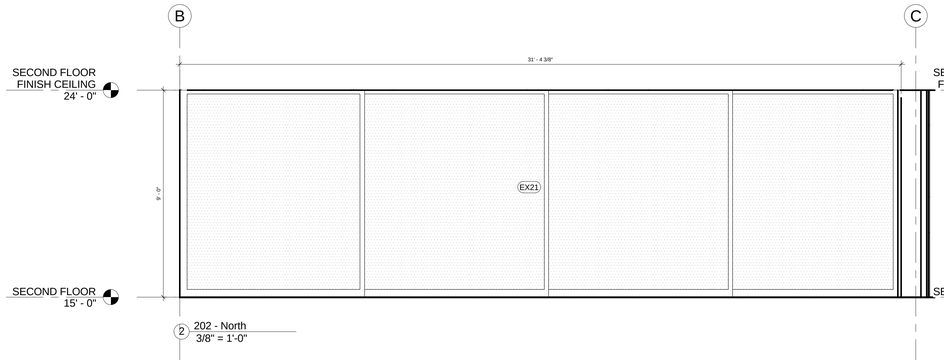

2 202 - North
3/8" = 1'-0"

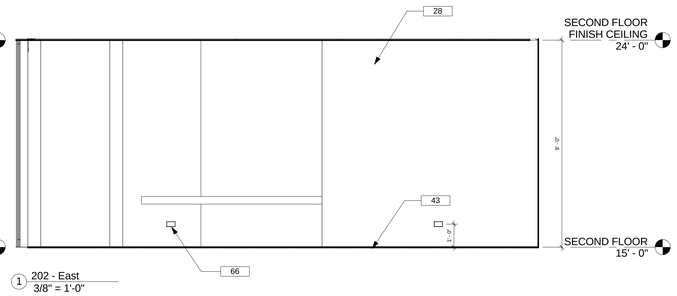

1 202 - East
3/8" = 1'-0"

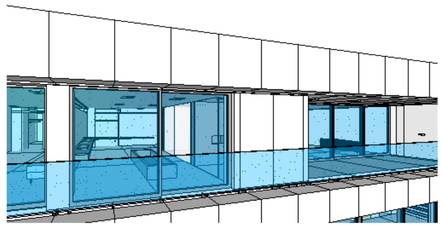

10 3D View 6

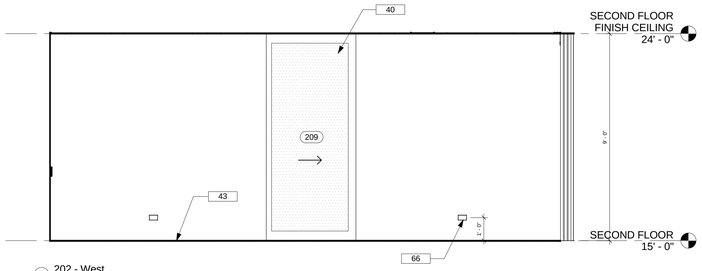

4 202 - West
3/8" = 1'-0"

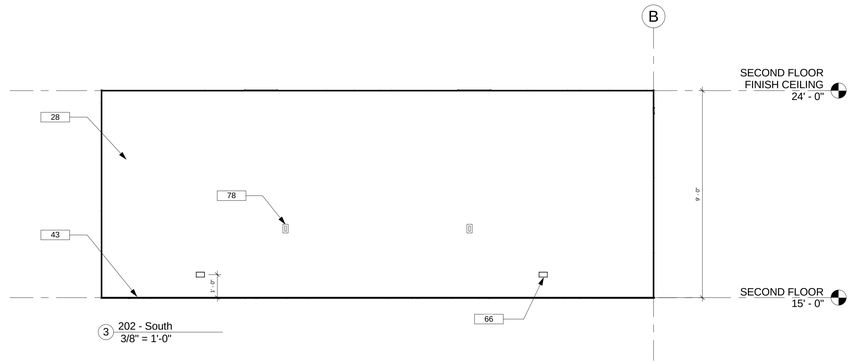

3 202 - South
3/8" = 1'-0"

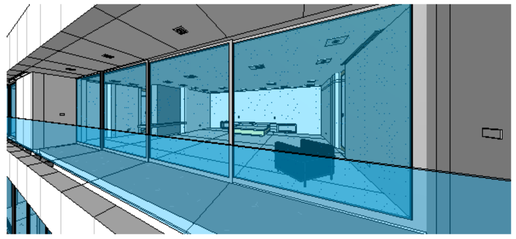

9 Copy (2) of Master Bathroom

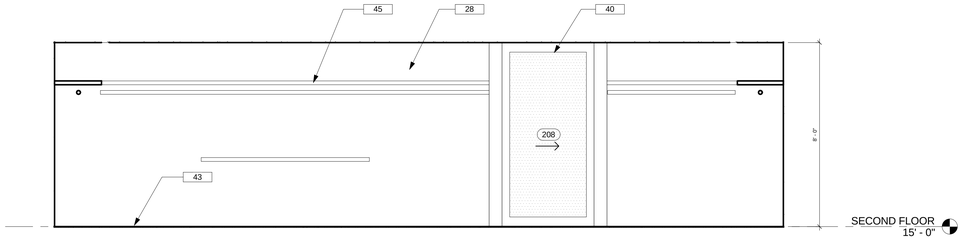

6 204 - South
3/8" = 1'-0"

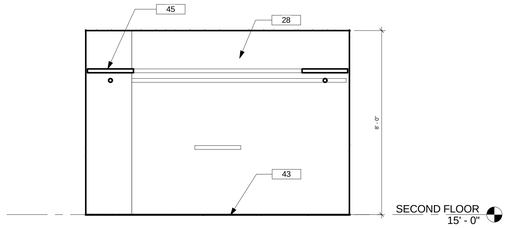

5 204 - East
3/8" = 1'-0"

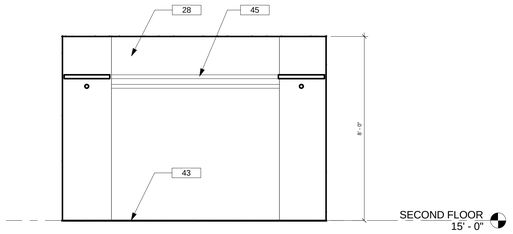

8 204 - West
3/8" = 1'-0"

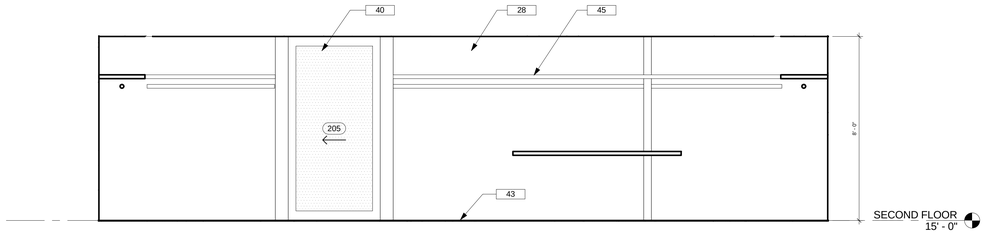

7 204 - North
3/8" = 1'-0"

1 (E) FLOW LINE / CONCRETE CULVERT
2 (N) TREE
4 FIRE TRUCK TURNAROUND
7 BUILT IN STORAGE SHELVING
8 TERRAZZO FLOORING
9 METAL FRAME PER STRUCTURAL, FINISH TO MATCH WHITE EXTERIOR METAL PANEL OF BUILDING
10 KITCHEN BY OTHERS
11 CASEWORK
12 KITCHEN ISLAND PER KITCHEN DRAWINGS
14 TELEVISION BY OWNER
15 GAS FIREPLACE
18 WATER HEATER
19 SHOWER BENCH
20 CLEAR GLASS RAIL (42")
21 ELEVATOR MECHANICAL EQUIPMENT
22 JACUZZI BATHTUB
28 GYPSUM WALL BOARD
30 DEHUMIDIFIER IN CLOSET
31 EXPOSED STEEL COLUMN PER STRUCTURAL, PAINTED (TYP.)
32 SINGLE GLAZED TEMPERED SLIDING DOOR SYSTEM, FLEETWOOD OR EQUAL
33 OPERABLE SKYLIGHT - W/ 4" CURB ABOVE ROOF
34 ROOF DRAIN TYP.
35 WALL SAFE
36 1 HOUR RATED WALL
37 METAL PANEL CLADDING SYSTEM KYNAR PAINTED WHITE
38 CURTAIN WALL, SEE CURTAIN WALL SCHEDULE
39 JOINT OF METAL PANEL SYSTEM, TYP
40 DOOR, SEE DOOR SCHEDULE
42 FLIP UP GARAGE DOOR CLAD IN METAL PANEL SYSTEM SIM. TO EXTERIOR OF BUILDING
43 1/2" BASE REVEAL
45 CLOSET-POLE AND SHELF
46 BATHTUB
47 PREWIRE FOR FUTURE PHOTOVOLTAIC PANELS
48 PERMEABLE GRASS PAVING SYSTEM
49 (N) FIRE HYDRANT
50 (N) CONCRETE RETAINING WALL
54 ART WALL
55 SLIDING DOOR POCKET
56 KNEESPACE BELOW
57 FILE CABINETS BELOW, LATERAL LEGAL
58 SHELVING, EUROCONCEPTS AIKO OR EQUAL
59 ROLLING TABLE BY OWNER
60 4" THICK ART DISPLAY LEDGE / HEARTH, CAESARSTONE "CONCRETE"
61 ELECTRICAL SUB PANEL, SEE ELECTRICAL DRAWINGS
63 TELEPHONE / SECURITY / LIGHTING CONTROL PANELS
66 ELECTRICAL OUTLET - SEE ELECTRICAL DRAWINGS
67 METAL REGLET IN TERRAZZO FLOORING
68 ROOFTOP MECHANICAL EQUIPMENT PER MECHANICAL DRAWINGS
69 YELLOW GLASS
71 MOTORIZED ROLL DOWN SHADE
72 GLASS
73 TILE
74 BACKLIT MIRROR HELD OFF OF WALL BEHIND
75 ELECTRICAL EQUIPMENT - SEE ELECTRICAL DRAWINGS
76 RED GLASS
77 RETURN AIR LINEAR DIFFUSER - SEE MECHANICAL DRAWINGS
78 LIGHTING CONTROL KEYPAD - SEE ELECTRICAL DRAWINGS
80 DOOR - ELECTIRCALLY OPERATED - SEE DOOR SCHEDULE
81 LAMINATE COUNTERTOP
82 LIGHTING FIXTURE, SEE LIGHTING DRAWINGS FOR TYPE
83 MECHANICAL REGISTER, SEE MECHANICAL DRAWINGS FOR TYPE
C-4 CASEWORK- MSTR BDRM
C-7 CASEWORK- ART STORAGE
C-8 CASEWORK- LIVING ROOM
CO EXPOSED CONCRETE, SEALED
NC
P PAINT
S-1 TERRAZZO
S-2 CAESARSTONE - CONCRETE

STEVEN EHRLICH Architects
10865 WASHINGTON BLVD.
CULVER CITY, 90232.3600
TEL 310.838.9700
FAX 310.838.9737
WWW.S-EHRLICH.COM

PROJECT

Hoffman Castleman Residence

1445 El Bosque Ct, Pacific Palisades, CA

CONSULTANTS

NO.	DATE	REVISION

THIS DRAWING AND THE DESIGNS, ARRANGEMENTS, DEPICTIONS, IDEAS AND OTHER INFORMATION CONTAINED HEREIN CONSTITUTE UNPUBLISHED WORK OF STEVEN EHRLICH ARCHITECTS AND SHALL REMAIN PROPERTY OF STEVEN EHRLICH ARCHITECTS IN PERPETUITY. NO PART THEREOF SHALL BE REPRODUCED, COPIED, DISCLOSED, DISTRIBUTED, SOLD, PUBLISHED OR OTHERWISE USED IN ANYWAY WITHOUT THE ADVANCED EXPRESS WRITTEN CONSENT OF STEVEN EHRLICH ARCHITECTS. VISUAL CONTACT WITH THE ABOVE DRAWINGS, OR ANY PART THEREOF, SHALL CONSTITUE CONCLUSIVE EVIDENCE OF ACCEPTANCE OF THESE RESTRICTIONS.

SHEET TITLE

Interior Elevations

DRAWN: Author
SCALE: 3/8" = 1'-0"
STATUS: Back Check
DATE: 04-28-10
FILE: S:\Nmarble\Hoffman\Hoffman Central Print.rvt
JOB: 491
SHEET NUMBER:

A5.06

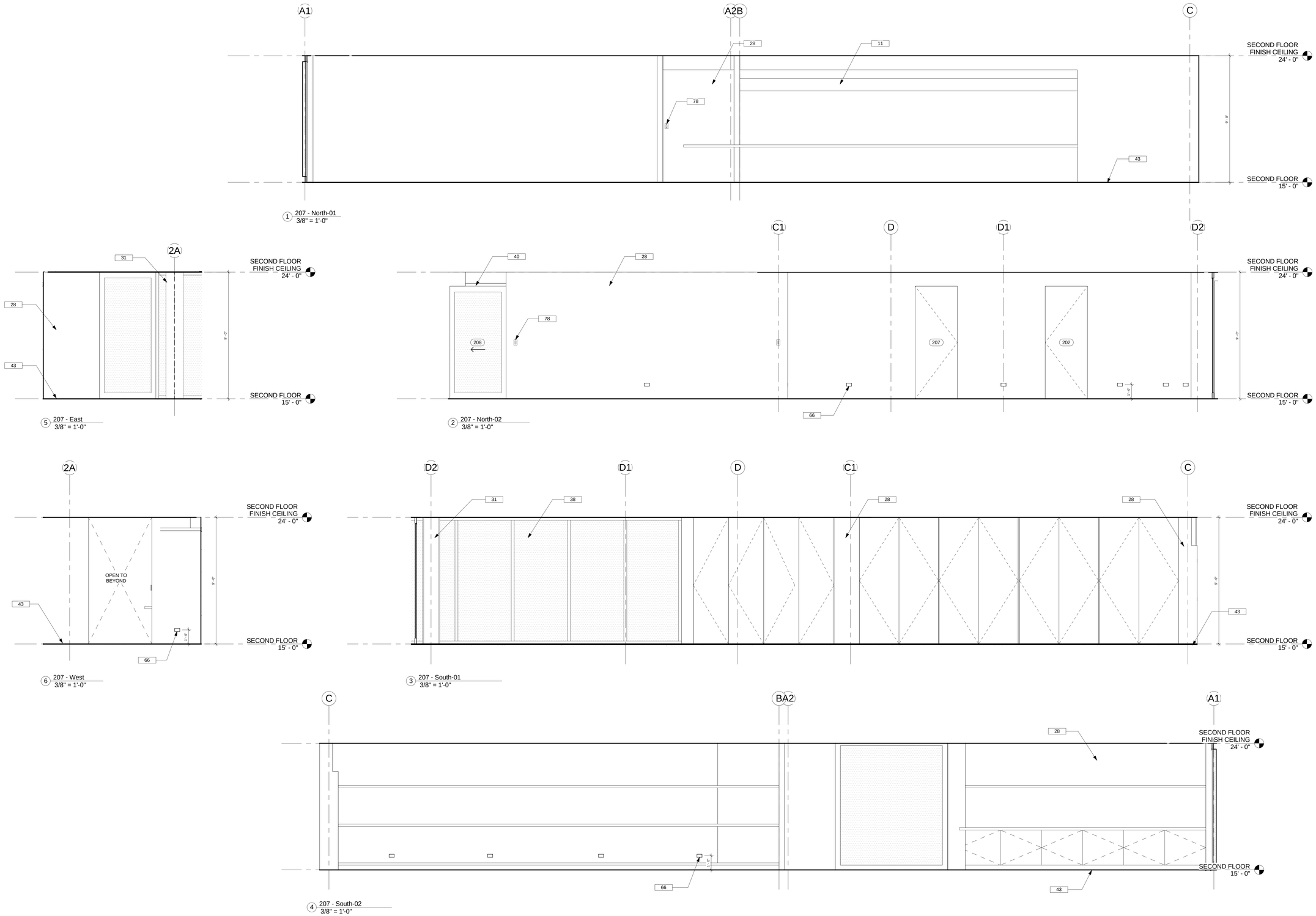

1 (E) FLOW LINE / CONCRETE CULVERT
2 (N) TREE
4 FIRE TRUCK TURNAROUND
7 BUILT IN STORAGE SHELVING
8 TERRAZZO FLOORING
9 METAL FRAME PER STRUCTURAL, FINISH TO MATCH WHITE EXTERIOR METAL PANEL OF BUILDING
10 KITCHEN BY OTHERS
11 CASEWORK
12 KITCHEN ISLAND PER KITCHEN DRAWINGS
14 TELEVISION BY OWNER
15 GAS FIREPLACE
18 WATER HEATER
19 SHOWER BENCH
20 CLEAR GLASS RAIL (42")
21 ELEVATOR MECHANICAL EQUIPMENT
22 JACUZZI BATHTUB
28 GYPSUM WALL BOARD
30 DEHUMIDIFIER IN CLOSET
31 EXPOSED STEEL COLUMN PER STRUCTURAL, PAINTED (TYP.)
32 SINGLE GLAZED TEMPERED SLIDING DOOR SYSTEM, FLEETWOOD OR EQUAL
33 OPERABLE SKYLIGHT - W/ 4" CURB ABOVE ROOF
34 ROOF DRAIN TYP.
35 WALL SAFE
36 1 HOUR RATED WALL
37 METAL PANEL CLADDING SYSTEM KYNAR PAINTED WHITE
38 CURTAIN WALL, SEE CURTAIN WALL SCHEDULE
39 JOINT OF METAL PANEL SYSTEM, TYP
40 DOOR, SEE DOOR SCHEDULE
42 FLIP UP GARAGE DOOR CLAD IN METAL PANEL SYSTEM SIM. TO EXTERIOR OF BUILDING
43 1/2" BASE REVEAL
45 CLOSET-POLE AND SHELF
46 BATHTUB
47 PREWIRE FOR FUTURE PHOTOVOLTAIC PANELS
48 PERMEABLE GRASS PAVING SYSTEM
49 (N) FIRE HYDRANT
50 (N) CONCRETE RETAINING WALL
54 ART WALL
55 SLIDING DOOR POCKET
56 KNEESPACE BELOW
57 FILE CABINETS BELOW, LATERAL LEGAL
58 SHELVING, EUROCONCEPTS AIKO OR EQUAL
59 ROLLING TABLE BY OWNER
60 4" THICK ART DISPLAY LEDGE / HEARTH, CAESARSTONE "CONCRETE"
61 ELECTRICAL SUB PANEL, SEE ELECTRICAL DRAWINGS
63 TELEPHONE / SECURITY / LIGHTING CONTROL PANELS
66 ELECTRICAL OUTLET - SEE ELECTRICAL DRAWINGS
67 METAL REGLET IN TERRAZZO FLOORING
68 ROOFTOP MECHANICAL EQUIPMENT PER MECHANICAL DRAWINGS
69 YELLOW GLASS
71 MOTORIZED ROLL DOWN SHADE
72 GLASS
73 TILE
74 BACKLIT MIRROR HELD OFF OF WALL BEHIND
75 ELECTRICAL EQUIPMENT - SEE ELECTRICAL DRAWINGS
76 RED GLASS
77 RETURN AIR LINEAR DIFFUSER - SEE MECHANICAL DRAWINGS
78 LIGHTING CONTROL KEYPAD - SEE ELECTRICAL DRAWINGS
80 DOOR - ELECTIRCALLY OPERATED - SEE DOOR SCHEDULE
81 LAMINATE COUNTERTOP
82 LIGHTING FIXTURE, SEE LIGHTING DRAWINGS FOR TYPE
83 MECHANICAL REGISTER, SEE MECHANICAL DRAWINGS FOR TYPE
C-4 CASEWORK- MSTR BDRM
C-7 CASEWORK- ART STORAGE
C-8 CASEWORK- LIVING ROOM
CONC EXPOSED CONCRETE, SEALED
P PAINT
S-1 TERRAZZO
S-2 CAESARSTONE - CONCRETE

STEVEN EHRLICH
Architects
10865 WASHINGTON BLVD.
CULVER CITY, 90232.3600
TEL 310.838.9700
FAX 310.838.9737
WWW.S-EHRLICH.COM

PROJECT

Hoffman Castleman Residence

1445 El Bosque Ct, Pacific Palisades, CA

CONSULTANTS

NO.	DATE	REVISION

THIS DRAWING AND THE DESIGNS, ARRANGEMENTS, DEPICTIONS, IDEAS AND OTHER INFORMATION CONTAINED HEREIN CONSTITUTE UNPUBLISHED WORK OF STEVEN EHRLICH ARCHITECTS AND SHALL REMAIN PROPERTY OF STEVEN EHRLICH ARCHITECTS IN PERPETUITY. NO PART THEREOF SHALL BE REPRODUCED, COPIED, DISCLOSED, DISTRIBUTED, SOLD, PUBLISHED OR OTHERWISE USED IN ANYWAY WITHOUT THE ADVANCED EXPRESS WRITTEN CONSENT OF STEVEN EHRLICH ARCHITECTS. VISUAL CONTACT WITH THE ABOVE DRAWINGS, OR ANY PART THEREOF, SHALL CONSTITUE CONCLUSIVE EVIDENCE OF ACCEPTANCE OF THESE RESTRICTIONS.

SHEET TITLE

Interior Elevations

DRAWN: Author
SCALE: 3/8" = 1'-0"
STATUS: Back Check
DATE: 04-28-10
FILE: S:\Nmarble\Hoffman\Hoffman Central Print.rvt
JOB: 491

SHEET NUMBER:

A5.07

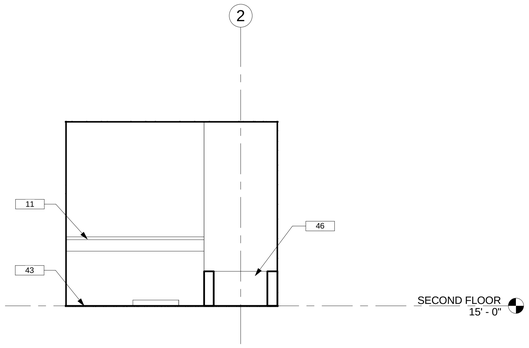

14 206 - West
3/8" = 1'-0"

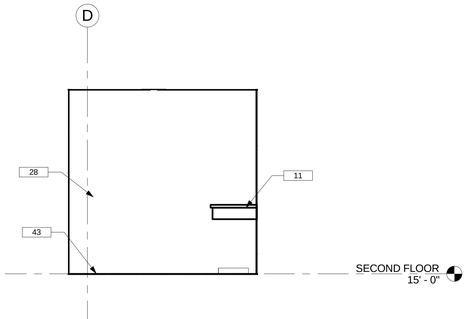

13 206 - South
3/8" = 1'-0"

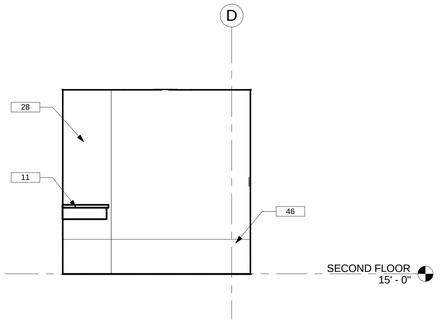

15 206 - North
3/8" = 1'-0"

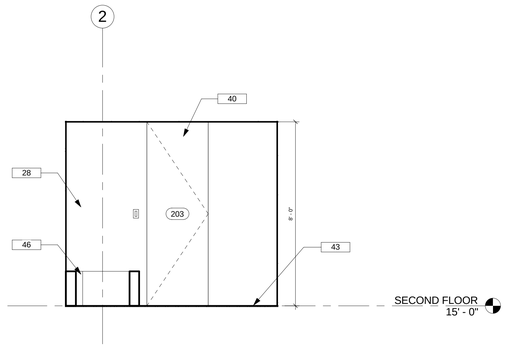

16 206 - East
3/8" = 1'-0"

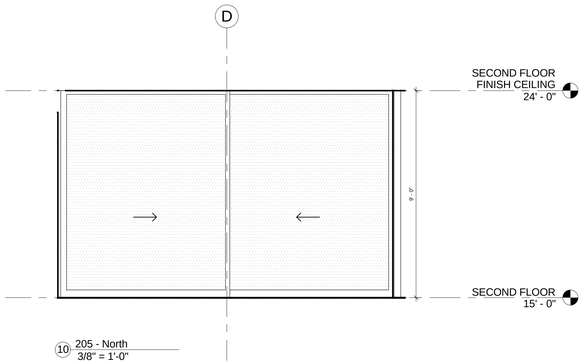

10 205 - North
3/8" = 1'-0"

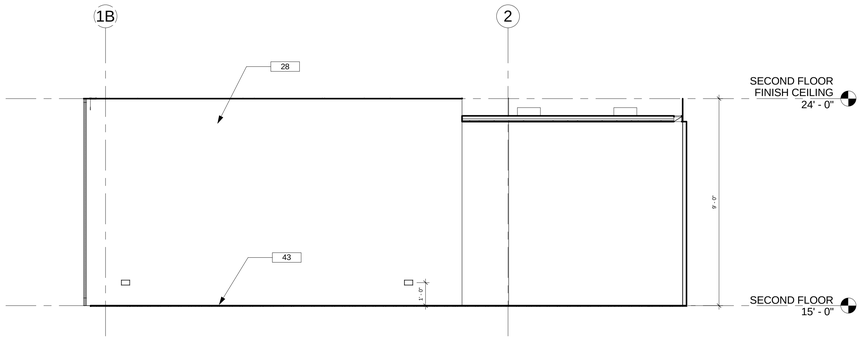

9 205 - East
3/8" = 1'-0"

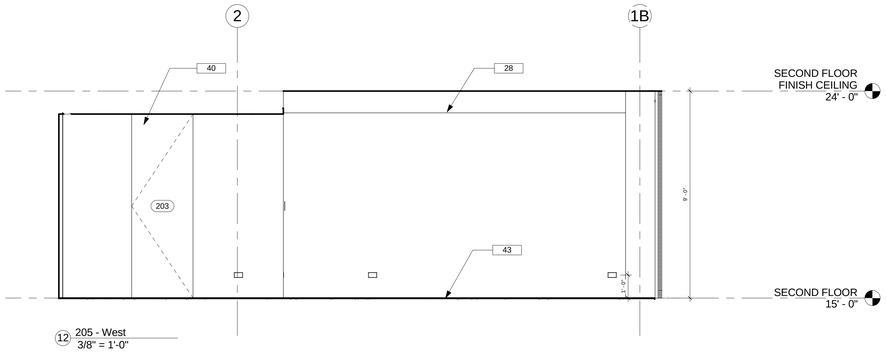

12 205 - West
3/8" = 1'-0"

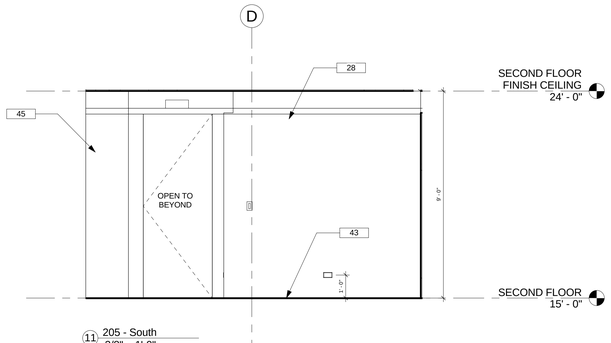

11 205 - South
3/8" = 1'-0"

1 (E) FLOW LINE / CONCRETE CULVERT
2 (N) TREE
4 FIRE TRUCK TURNAROUND
7 BUILT IN STORAGE SHELVING
8 TERRAZZO FLOORING
9 METAL FRAME PER STRUCTURAL, FINISH TO MATCH WHITE EXTERIOR METAL PANEL OF BUILDING
10 KITCHEN BY OTHERS
11 CASEWORK
12 KITCHEN ISLAND PER KITCHEN DRAWINGS
14 TELEVISION BY OWNER
15 GAS FIREPLACE
18 WATER HEATER
19 SHOWER BENCH
20 CLEAR GLASS RAIL (42")
21 ELEVATOR MECHANICAL EQUIPMENT
22 JACUZZI BATHTUB
28 GYPSUM WALL BOARD
30 DEHUMIDIFIER IN CLOSET
31 EXPOSED STEEL COLUMN PER STRUCTURAL, PAINTED (TYP.)
32 SINGLE GLAZED TEMPERED SLIDING DOOR SYSTEM, FLEETWOOD OR EQUAL
33 OPERABLE SKYLIGHT - W/ 4" CURB ABOVE ROOF
34 ROOF DRAIN TYP.
35 WALL SAFE
36 1 HOUR RATED WALL
37 METAL PANEL CLADDING SYSTEM KYNAR PAINTED WHITE
38 CURTAIN WALL, SEE CURTAIN WALL SCHEDULE
39 JOINT OF METAL PANEL SYSTEM, TYP
40 DOOR, SEE DOOR SCHEDULE
42 FLIP UP GARAGE DOOR CLAD IN METAL PANEL SYSTEM SIM. TO EXTERIOR OF BUILDING
43 1/2" BASE REVEAL
45 CLOSET-POLE AND SHELF
46 BATHTUB
47 PREWIRE FOR FUTURE PHOTOVOLTAIC PANELS
48 PERMEABLE GRASS PAVING SYSTEM
49 (N) FIRE HYDRANT
50 (N) CONCRETE RETAINING WALL
54 ART WALL
55 SLIDING DOOR POCKET
56 KNEESPACE BELOW
57 FILE CABINETS BELOW, LATERAL LEGAL
58 SHELVING, EUROCONCEPTS AIKO OR EQUAL
59 ROLLING TABLE BY OWNER
60 4" THICK ART DISPLAY LEDGE / HEARTH, CAESARSTONE "CONCRETE"
61 ELECTRICAL SUB PANEL, SEE ELECTRICAL DRAWINGS
63 TELEPHONE / SECURITY / LIGHTING CONTROL PANELS
66 ELECTRICAL OUTLET - SEE ELECTRICAL DRAWINGS
67 METAL REGLET IN TERRAZZO FLOORING
68 ROOFTOP MECHANICAL EQUIPMENT PER MECHANICAL DRAWINGS
69 YELLOW GLASS
71 MOTORIZED ROLL DOWN SHADE
72 GLASS
73 TILE
74 BACKLIT MIRROR HELD OFF OF WALL BEHIND
75 ELECTRICAL EQUIPMENT - SEE ELECTRICAL DRAWINGS
76 RED GLASS
77 RETURN AIR LINEAR DIFFUSER - SEE MECHANICAL DRAWINGS
78 LIGHTING CONTROL KEYPAD - SEE ELECTRICAL DRAWINGS
80 DOOR - ELECTIRCALLY OPERATED - SEE DOOR SCHEDULE
81 LAMINATE COUNTERTOP
82 LIGHTING FIXTURE, SEE LIGHTING DRAWINGS FOR TYPE
83 MECHANICAL REGISTER, SEE MECHANICAL DRAWINGS FOR TYPE
C-4 CASEWORK- MSTR BDRM
C-7 CASEWORK- ART STORAGE
C-8 CASEWORK- LIVING ROOM
CONC EXPOSED CONCRETE, SEALED
P PAINT
S-1 TERRAZZO
S-2 CAESARSTONE - CONCRETE

STEVEN EHRLICH Architects
10865 WASHINGTON BLVD.
CULVER CITY, 90232.3600
TEL 310.838.9700
FAX 310.838.9737
WWW.S-EHRLICH.COM

PROJECT

Hoffman Castleman Residence

1445 El Bosque Ct, Pacific Palisades, CA

CONSULTANTS

NO.	DATE	REVISION

THIS DRAWING AND THE DESIGNS, ARRANGEMENTS, DEPICTIONS, IDEAS AND OTHER INFORMATION CONTAINED HEREIN CONSTITUTE UNPUBLISHED WORK OF STEVEN EHRLICH ARCHITECTS AND SHALL REMAIN PROPERTY OF STEVEN EHRLICH ARCHITECTS IN PERPETUITY. NO PART THEREOF SHALL BE REPRODUCED, COPIED, DISCLOSED, DISTRIBUTED, SOLD, PUBLISHED OR OTHERWISE USED IN ANYWAY WITHOUT THE ADVANCED EXPRESS WRITTEN CONSENT OF STEVEN EHRLICH ARCHITECTS. VISUAL CONTACT WITH THE ABOVE DRAWINGS, OR ANY PART THEREOF, SHALL CONSTITUE CONCLUSIVE EVIDENCE OF ACCEPTANCE OF THESE RESTRICTIONS.

SHEET TITLE

Interior Elevations

DRAWN: Author
SCALE: 3/8" = 1'-0"
STATUS: Back Check
DATE: 04-28-10
FILE: S:\Nmarble\Hoffman\Hoffman Central Print.rvt
JOB: 491

SHEET NUMBER:

A5.08

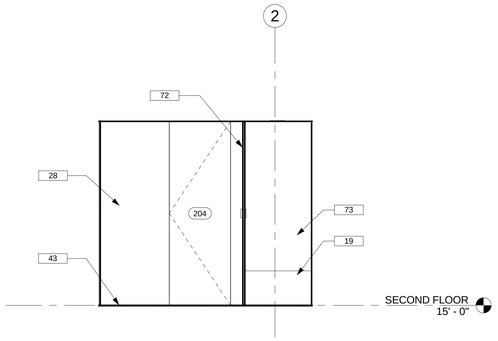

4 208 - West
3/8" = 1'-0"

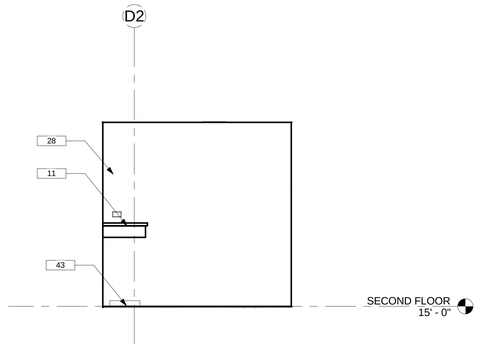

3 208 - South
3/8" = 1'-0"

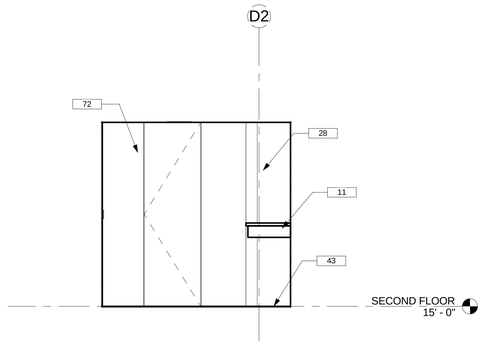

2 208 - North
3/8" = 1'-0"

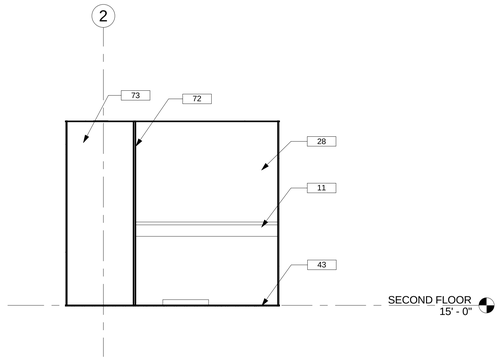

1 208 - East
3/8" = 1'-0"

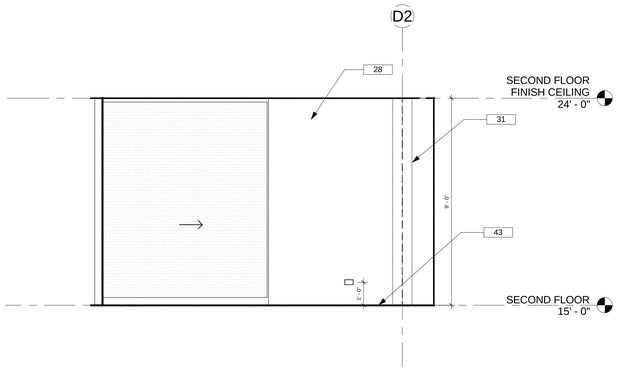

6 209 - North
3/8" = 1'-0"

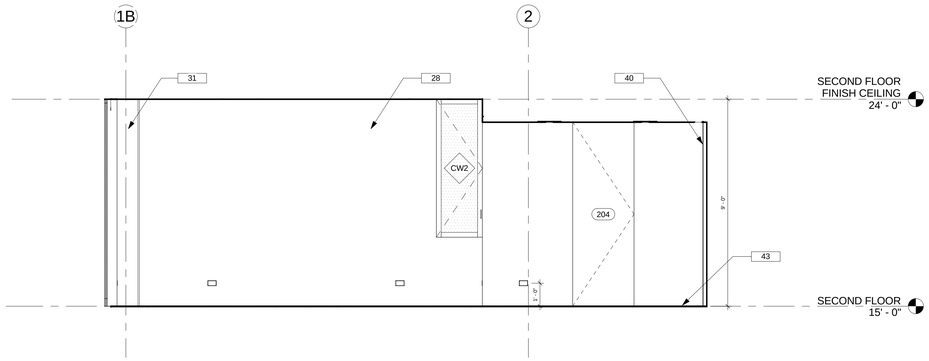

5 209 - East
3/8" = 1'-0"

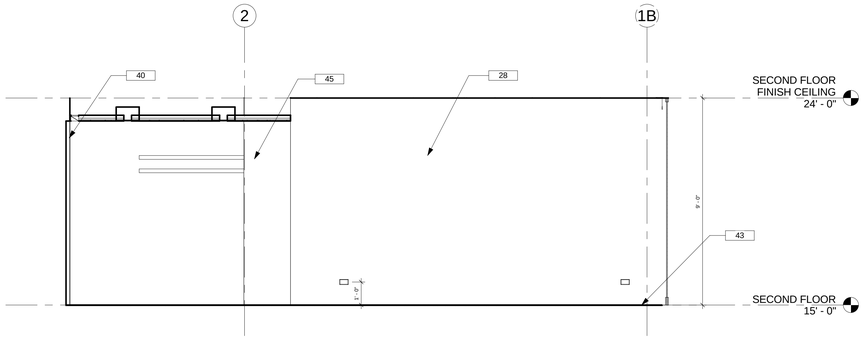

8 209 - West
3/8" = 1'-0"

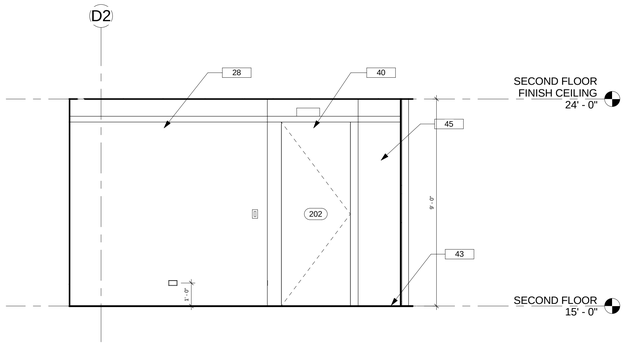

7 209 - South
3/8" = 1'-0"

STEVEN EHRLICH
Architects
10865 WASHINGTON BLVD.
CULVER CITY, 90232.3600
TEL 310.838.9700
FAX 310.838.9737
WWW.S-EHRLICH.COM

PROJECT

Hoffman Castleman Residence

1445 El Bosque Ct, Pacific Palisades, CA

CONSULTANTS

NO.	DATE	REVISION

THIS DRAWING AND THE DESIGNS, ARRANGEMENTS, DEPICTIONS, IDEAS AND OTHER INFORMATION CONTAINED HEREIN CONSTITUTE UNPUBLISHED WORK OF STEVEN EHRLICH ARCHITECTS AND SHALL REMAIN PROPERTY OF STEVEN EHRLICH ARCHITECTS IN PERPETUITY. NO PART THEREOF SHALL BE REPRODUCED, COPIED, DISCLOSED, DISTRIBUTED, SOLD, PUBLISHED OR OTHERWISE USED IN ANYWAY WITHOUT THE ADVANCED EXPRESS WRITTEN CONSENT OF STEVEN EHRLICH ARCHITECTS. VISUAL CONTACT WITH THE ABOVE DRAWINGS, OR ANY PART THEREOF, SHALL CONSTITUE CONCLUSIVE EVIDENCE OF ACCEPTANCE OF THESE RESTRICTIONS.

SHEET TITLE

Interior Elevations

DRAWN:	Author
SCALE:	3/8" = 1'-0"
STATUS:	Back Check
DATE:	04-28-10
FILE:	S:\Nmarble\Hoffman\Hoffman Central Print.rvt
JOB:	491

SHEET NUMBER:

A5.09

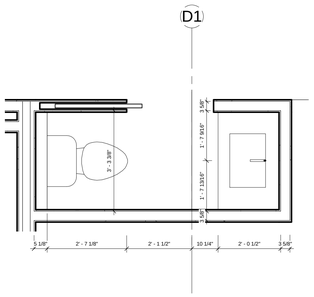

4 Kitchen Powder Room
1/2" = 1'-0"

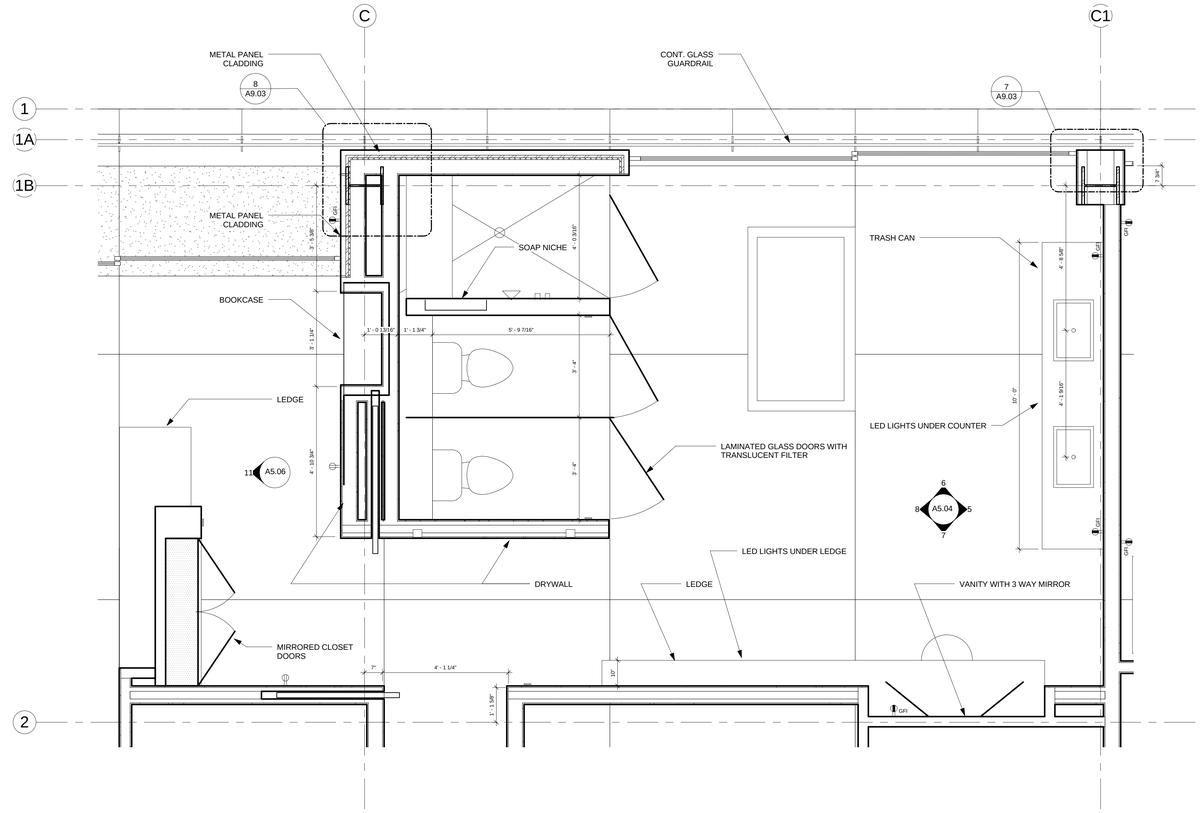

1 Master Bathroom Enlarged
1/2" = 1'-0"

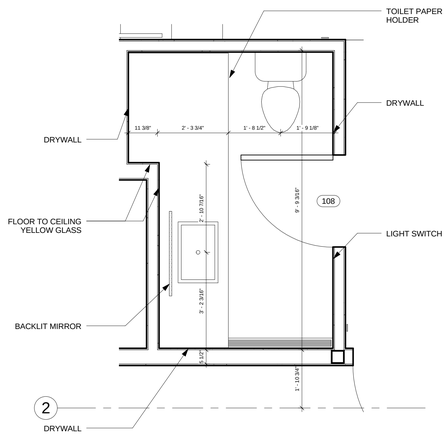

3 ENLARGED POWDER ROOM PLAN
1/2" = 1'-0"

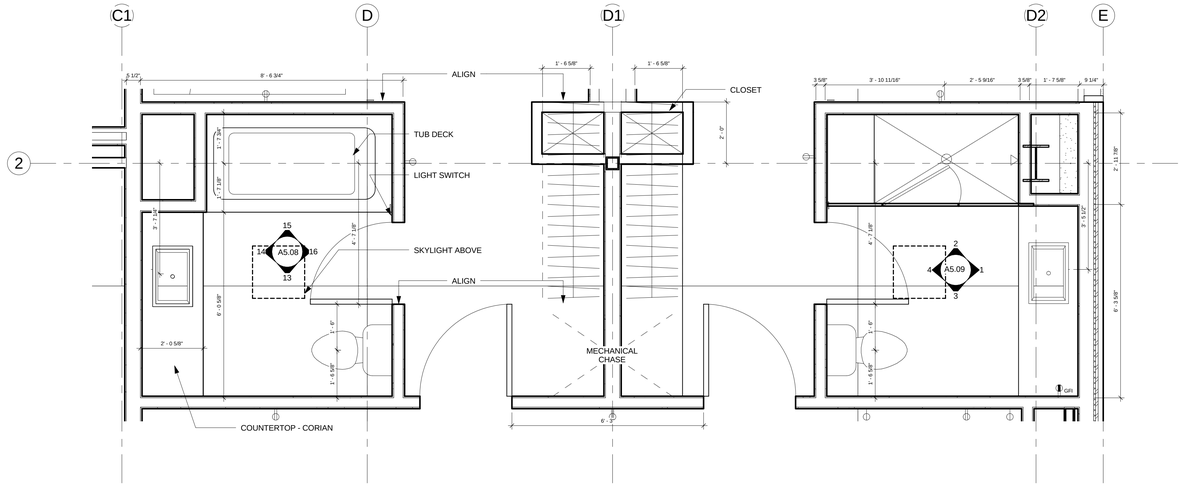

2 Enlarged Guest Bathroom Plans
1/2" = 1'-0"

1 (E) FLOW LINE / CONCRETE CULVERT
2 (N) TREE
4 FIRE TRUCK TURNAROUND
7 BUILT IN STORAGE SHELVING
8 TERRAZZO FLOORING
9 METAL FRAME PER STRUCTURAL, FINISH TO MATCH WHITE EXTERIOR METAL PANEL OF BUILDING
10 KITCHEN BY OTHERS
11 CASEWORK
12 KITCHEN ISLAND PER KITCHEN DRAWINGS
14 TELEVISION BY OWNER
15 GAS FIREPLACE
18 WATER HEATER
19 SHOWER BENCH
20 CLEAR GLASS RAIL (42")
21 ELEVATOR MECHANICAL EQUIPMENT
22 JACUZZI BATHTUB
28 GYPSUM WALL BOARD
30 DEHUMIDIFIER IN CLOSET
31 EXPOSED STEEL COLUMN PER STRUCTURAL, PAINTED (TYP.)
32 SINGLE GLAZED TEMPERED SLIDING DOOR SYSTEM, FLEETWOOD OR EQUAL
33 OPERABLE SKYLIGHT - W/ 4" CURB ABOVE ROOF
34 ROOF DRAIN TYP.
35 WALL SAFE
36 1 HOUR RATED WALL
37 METAL PANEL CLADDING SYSTEM KYNAR PAINTED WHITE
38 CURTAIN WALL, SEE CURTAIN WALL SCHEDULE
39 JOINT OF METAL PANEL SYSTEM, TYP
40 DOOR, SEE DOOR SCHEDULE
42 FLIP UP GARAGE DOOR CLAD IN METAL PANEL SYSTEM SIM. TO EXTERIOR OF BUILDING
43 1/2" BASE REVEAL
45 CLOSET-POLE AND SHELF
46 BATHTUB
47 PREWIRE FOR FUTURE PHOTOVOLTAIC PANELS
48 PERMEABLE GRASS PAVING SYSTEM
49 (N) FIRE HYDRANT
50 (N) CONCRETE RETAINING WALL
54 ART WALL
55 SLIDING DOOR POCKET
56 KNEESPACE BELOW
57 FILE CABINETS BELOW, LATERAL LEGAL
58 SHELVING, EUROCONCEPTS AIKO OR EQUAL
59 ROLLING TABLE BY OWNER
60 4" THICK ART DISPLAY LEDGE / HEARTH, CAESARSTONE "CONCRETE"
61 ELECTRICAL SUB PANEL, SEE ELECTRICAL DRAWINGS
63 TELEPHONE / SECURITY / LIGHTING CONTROL PANELS
66 ELECTRICAL OUTLET - SEE ELECTRICAL DRAWINGS
67 METAL REGLET IN TERRAZZO FLOORING
68 ROOFTOP MECHANICAL EQUIPMENT PER MECHANICAL DRAWINGS
69 YELLOW GLASS
71 MOTORIZED ROLL DOWN SHADE
72 GLASS
73 TILE
74 BACKLIT MIRROR HELD OFF OF WALL BEHIND
75 ELECTRICAL EQUIPMENT - SEE ELECTRICAL DRAWINGS
76 RED GLASS
77 RETURN AIR LINEAR DIFFUSER - SEE MECHANICAL DRAWINGS
78 LIGHTING CONTROL KEYPAD - SEE ELECTRICAL DRAWINGS
80 DOOR - ELECTIRCALLY OPERATED - SEE DOOR SCHEDULE
81 LAMINATE COUNTERTOP
82 LIGHTING FIXTURE, SEE LIGHTING DRAWINGS FOR TYPE
83 MECHANICAL REGISTER, SEE MECHANICAL DRAWINGS FOR TYPE
C-4 CASEWORK- MSTR BDRM
C-7 CASEWORK- ART STORAGE
C-8 CASEWORK- LIVING ROOM
CO EXPOSED CONCRETE, SEALED
NC
P PAINT
S-1 TERRAZZO
S-2 CAESARSTONE - CONCRETE

STEVEN EHRLICH
Architects
10865 WASHINGTON BLVD.
CULVER CITY, 90232.3600
TEL 310.838.9700
FAX 310.838.9737
WWW.S-EHRLICH.COM

PROJECT

Hoffman Castleman Residence

1445 El Bosque Ct, Pacific Palisades, CA

CONSULTANTS

NO.	DATE	REVISION

THIS DRAWING AND THE DESIGNS, ARRANGEMENTS, DEPICTIONS, IDEAS AND OTHER INFORMATION CONTAINED HEREIN CONSTITUTE UNPUBLISHED WORK OF STEVEN EHRLICH ARCHITECTS AND SHALL REMAIN PROPERTY OF STEVEN EHRLICH ARCHITECTS IN PERPETUITY. NO PART THEREOF SHALL BE REPRODUCED, COPIED, DISCLOSED, DISTRIBUTED, SOLD, PUBLISHED OR OTHERWISE USED IN ANYWAY WITHOUT THE ADVANCED EXPRESS WRITTEN CONSENT OF STEVEN EHRLICH ARCHITECTS. VISUAL CONTACT WITH THE ABOVE DRAWINGS, OR ANY PART THEREOF, SHALL CONSTITUE CONCLUSIVE EVIDENCE OF ACCEPTANCE OF THESE RESTRICTIONS.

SHEET TITLE

Enlarged Bathroom Plans

DRAWN: Author
SCALE: 1/2" = 1'-0"
STATUS: Back Check
DATE: 04-28-10
FILE: S:\Nmarble\Hoffman\Hoffman Central Print.rvt
JOB: 491
SHEET NUMBER:

A5.11

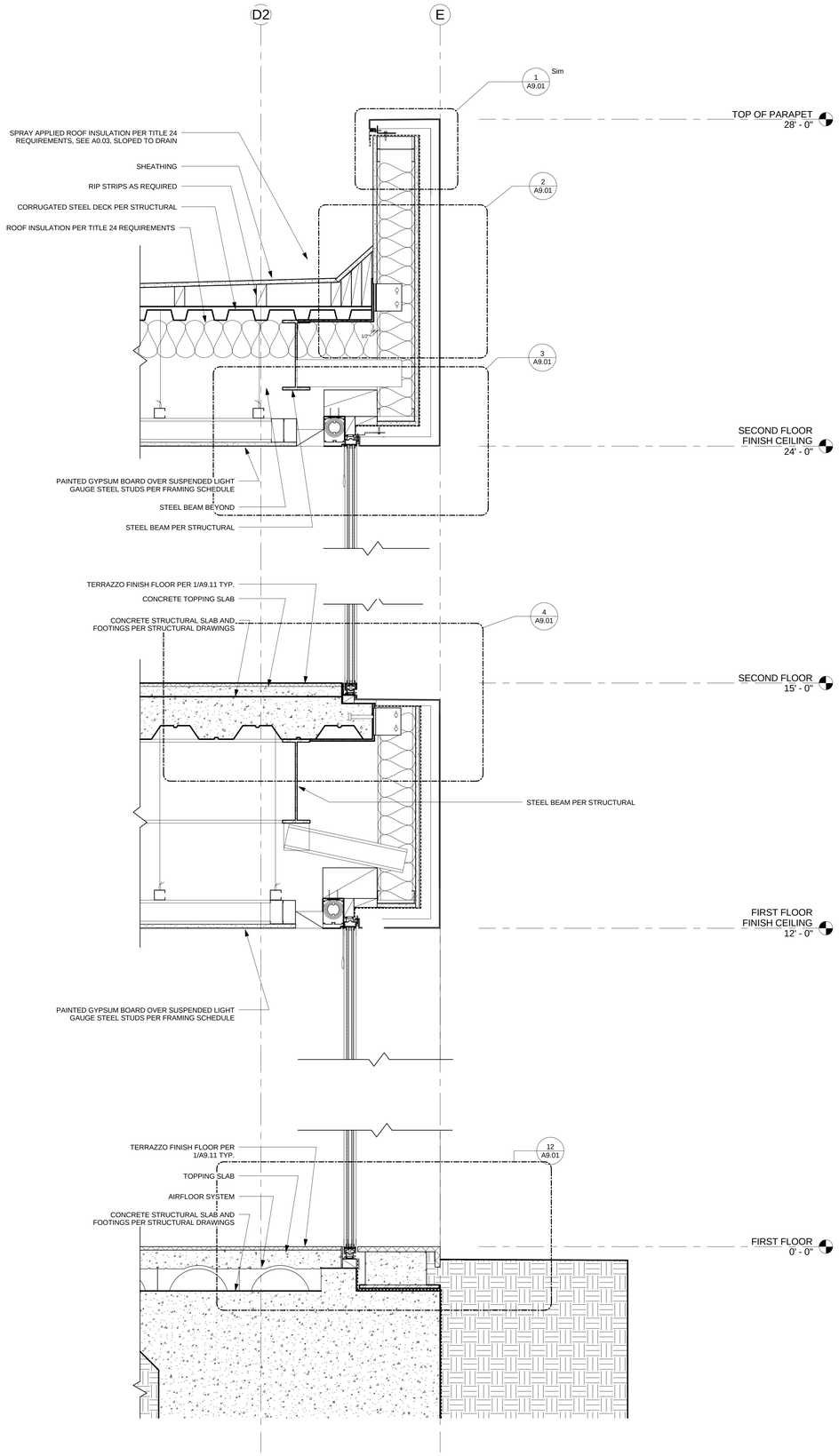

2 Wall Section @ Curtain Wall
1 1/2" = 1'-0"

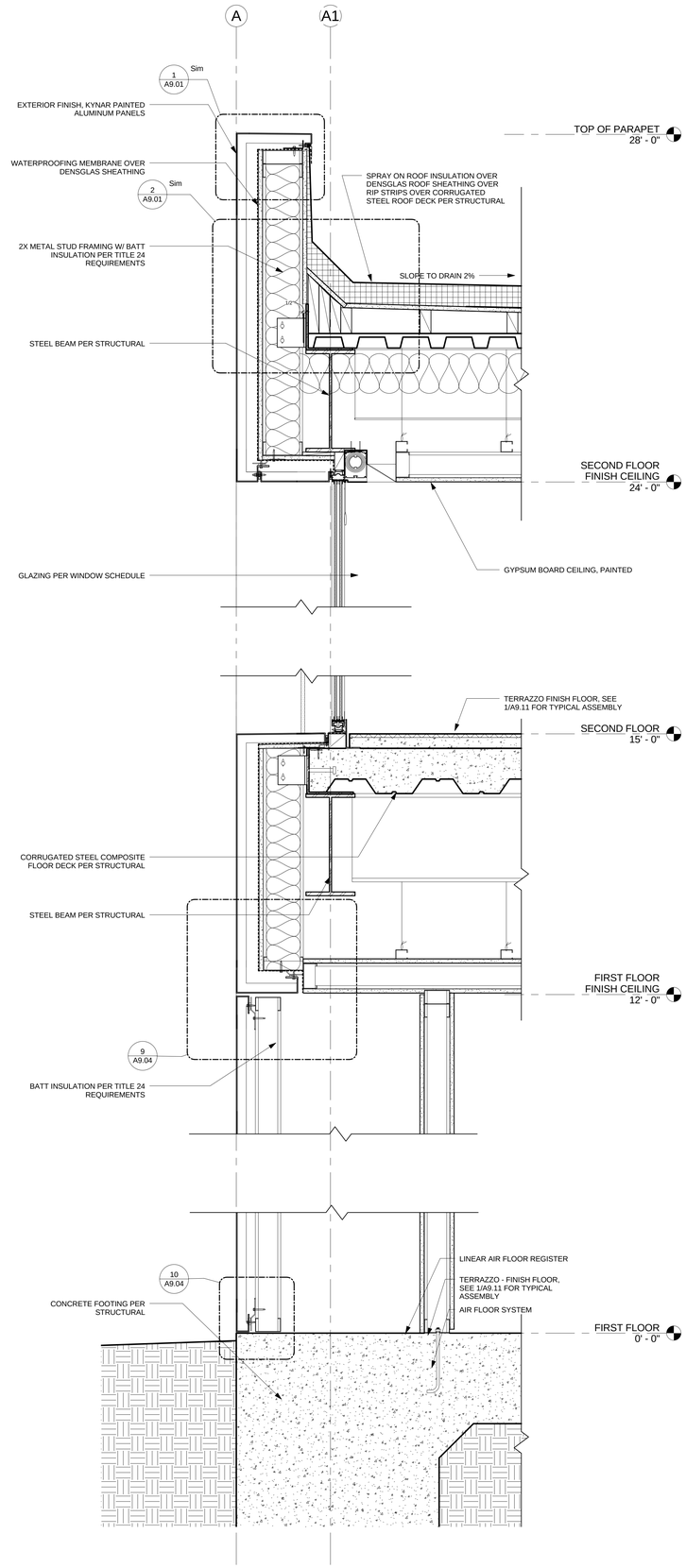

1 Wall Section @ Metal Panel / Slot Window
1 1/2" = 1'-0"

STEVEN EHRLICH Architects

10865 WASHINGTON BLVD.
CULVER CITY, 90232.3600
TEL 310.838.9700
FAX 310.838.9737
WWW.S-EHRLICH.COM

PROJECT

Hoffman Castleman Residence

1445 El Bosque Ct, Pacific Palisades, CA

CONSULTANTS

NO.	DATE	REVISION

THIS DRAWING AND THE DESIGNS, ARRANGEMENTS, DEPICTIONS, IDEAS AND OTHER INFORMATION CONTAINED HEREIN CONSTITUTE UNPUBLISHED WORK OF STEVEN EHRLICH ARCHITECTS AND SHALL REMAIN PROPERTY OF STEVEN EHRLICH ARCHITECTS IN PERPETUITY. NO PART THEREOF SHALL BE REPRODUCED, COPIED, DISCLOSED, DISTRIBUTED, SOLD, PUBLISHED OR OTHERWISE USED IN ANYWAY WITHOUT THE ADVANCED EXPRESS WRITTEN CONSENT OF STEVEN EHRLICH ARCHITECTS. VISUAL CONTACT WITH THE ABOVE DRAWINGS, OR ANY PART THEREOF, SHALL CONSTITUE CONCLUSIVE EVIDENCE OF ACCEPTANCE OF THESE RESTRICTIONS.

SHEET TITLE

Wall Sections

DRAWN:	Author
SCALE:	1 1/2" = 1'-0"
STATUS:	Back Check
DATE:	04-28-10
FILE:	S:\Nmarble\Hoffman\Hoffman Central Print.rvt
JOB:	491

SHEET NUMBER:

A6.01

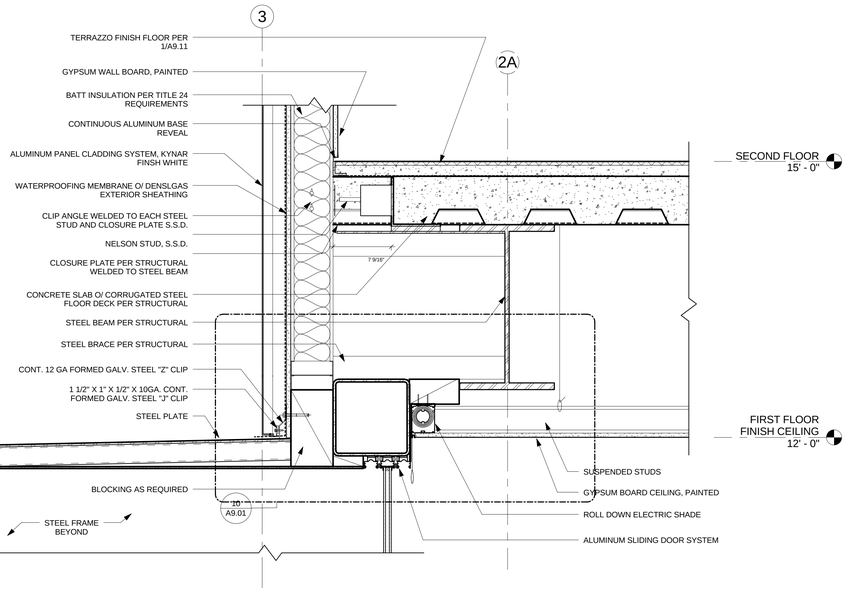

3 Wall Section @ Entry Head
1 1/2" = 1'-0"

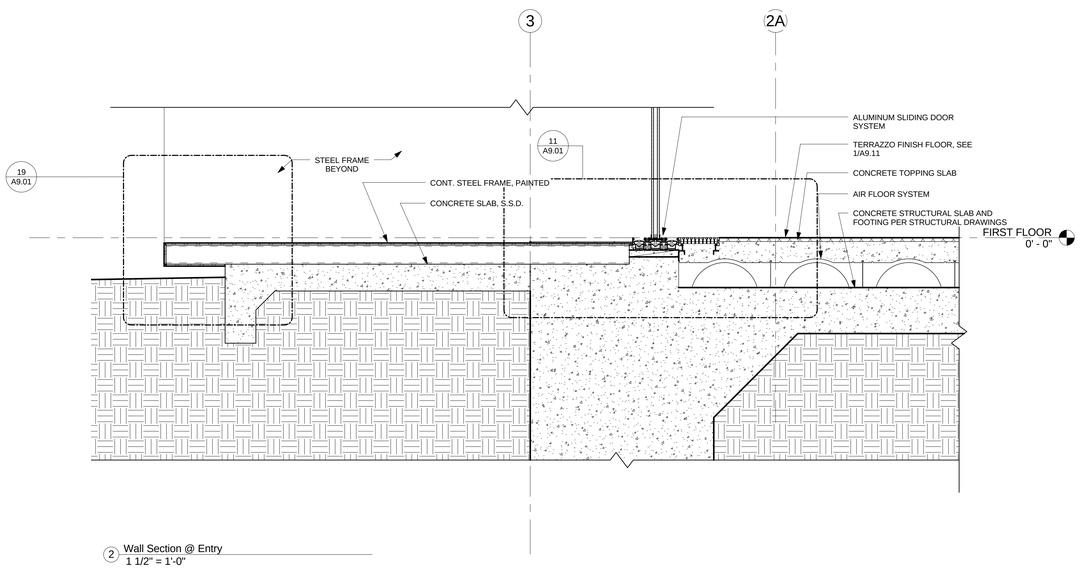

2 Wall Section @ Entry
1 1/2" = 1'-0"

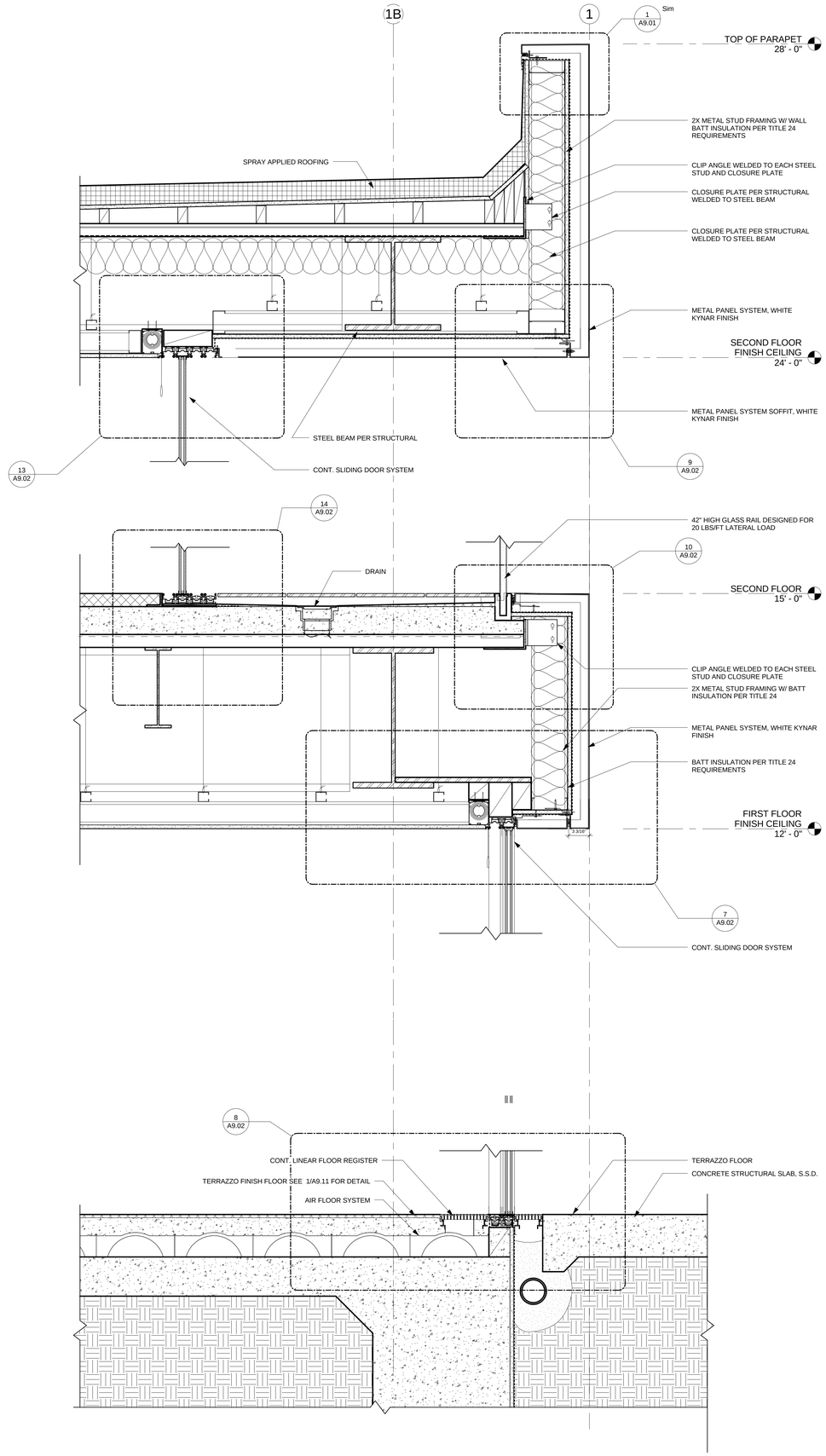

1 Wall Section @ Master Bedroom
1 1/2" = 1'-0"

STEVEN EHRLICH Architects

10865 WASHINGTON BLVD.
CULVER CITY, 90232.3600
TEL 310.838.9700
FAX 310.838.9737
WWW.S-EHRLICH.COM

PROJECT

Hoffman Castleman Residence

1445 El Bosque Ct, Pacific Palisades, CA

CONSULTANTS

NO.	DATE	REVISION

THIS DRAWING AND THE DESIGNS, ARRANGEMENTS, DEPICTIONS, IDEAS AND OTHER INFORMATION CONTAINED HEREIN CONSTITUTE UNPUBLISHED WORK OF STEVEN EHRLICH ARCHITECTS AND SHALL REMAIN PROPERTY OF STEVEN EHRLICH ARCHITECTS IN PERPETUITY. NO PART THEREOF SHALL BE REPRODUCED, COPIED, DISCLOSED, DISTRIBUTED, SOLD, PUBLISHED OR OTHERWISE USED IN ANYWAY WITHOUT THE ADVANCED EXPRESS WRITTEN CONSENT OF STEVEN EHRLICH ARCHITECTS. VISUAL CONTACT WITH THE ABOVE DRAWINGS, OR ANY PART THEREOF, SHALL CONSTITUE CONCLUSIVE EVIDENCE OF ACCEPTANCE OF THESE RESTRICTIONS.

SHEET TITLE

Wall Sections

DRAWN: Author

SCALE: 1 1/2" = 1'-0"

STATUS: Back Check

DATE: 04-28-10

FILE: S:\Nmarble\Hoffman\Hoffman Central Print.rvt

JOB: 491

SHEET NUMBER:

A6.02

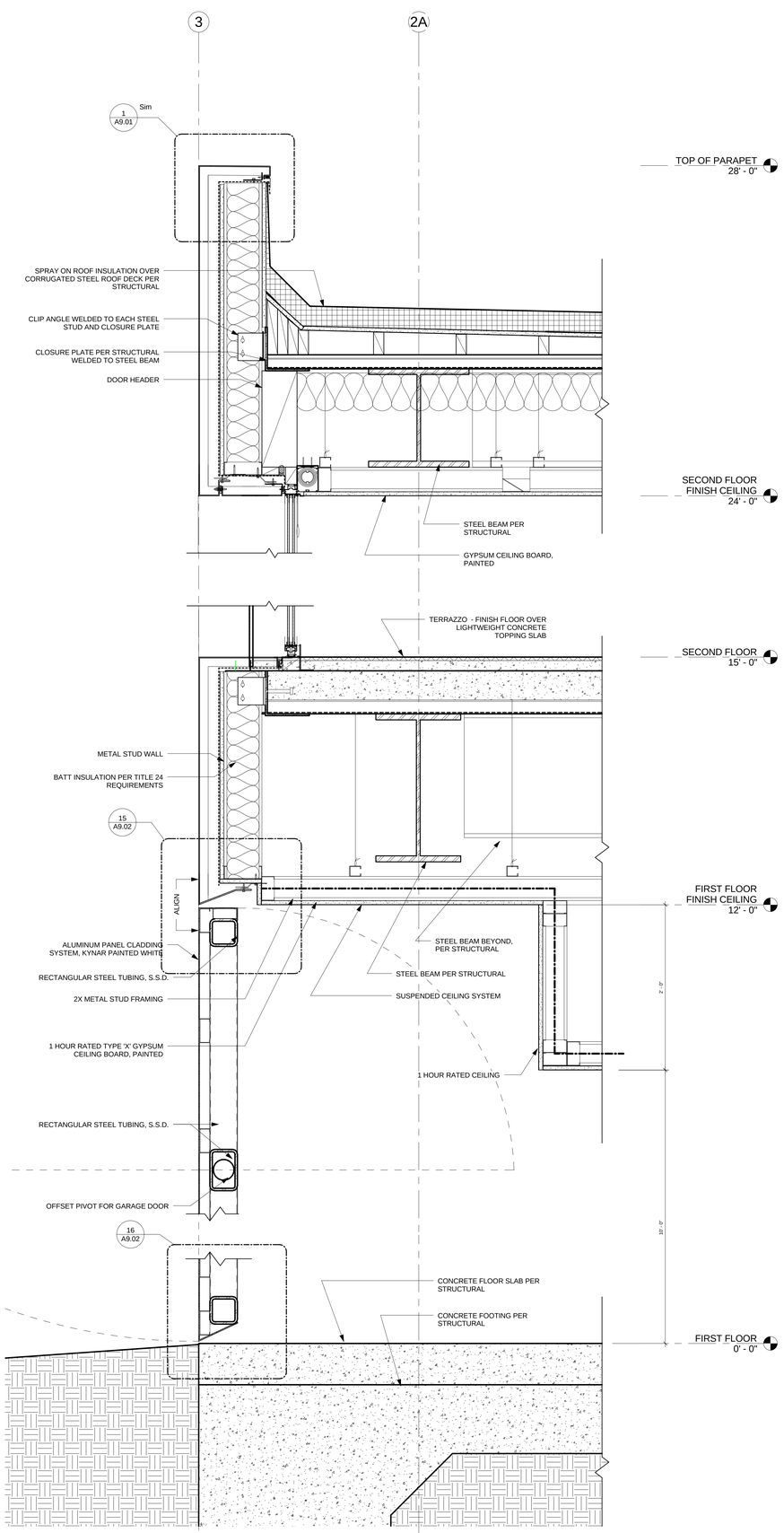

3 Wall Section @ Garage
1 1/2" = 1'-0"

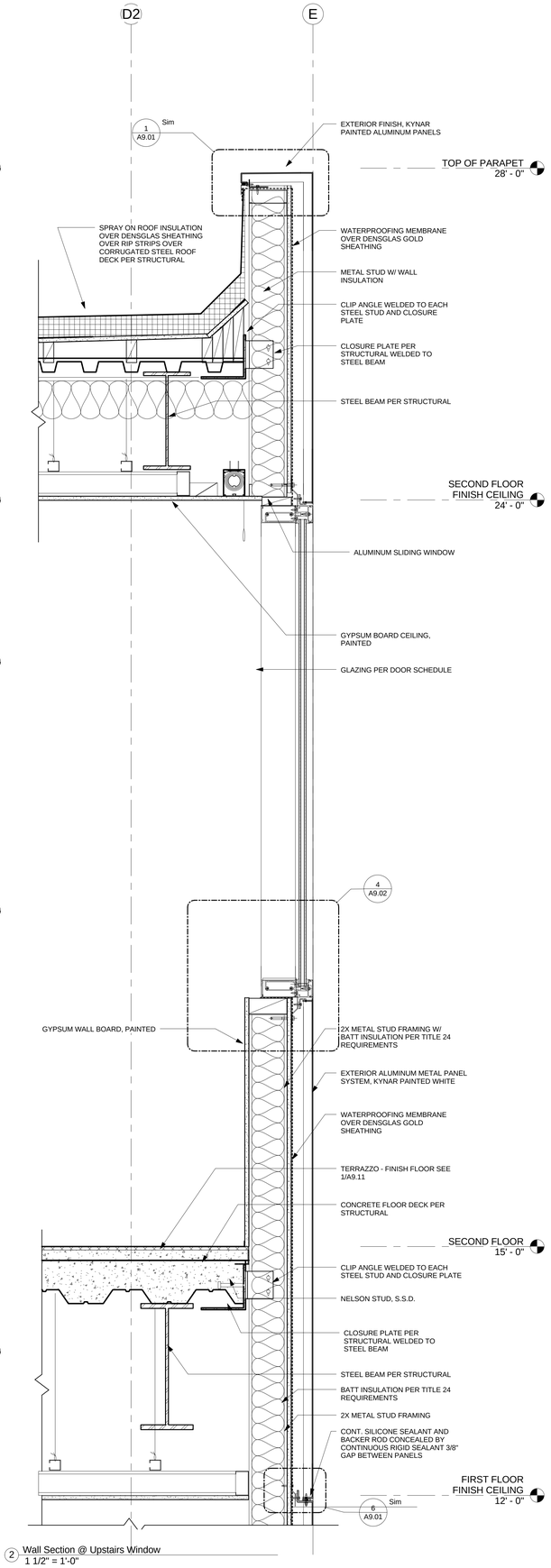

2 Wall Section @ Upstairs Window
1 1/2" = 1'-0"

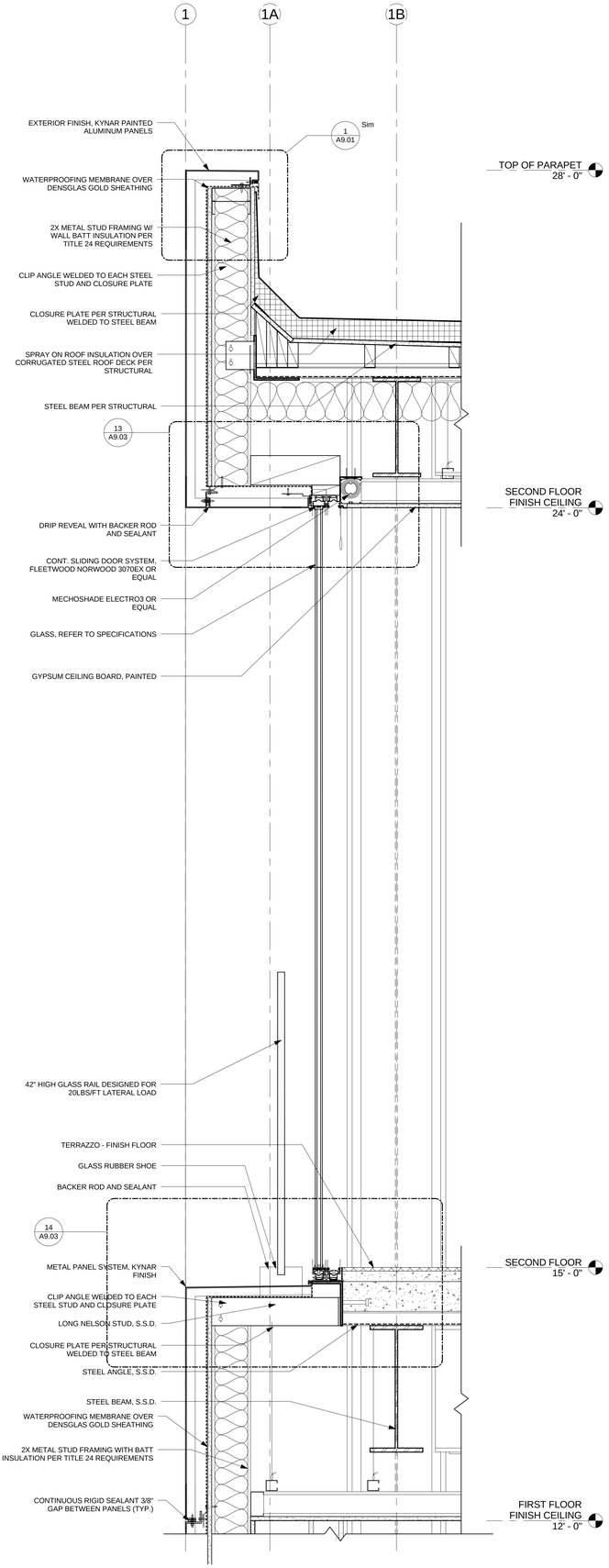

1 Wall Section @ Sliding Door
1 1/2" = 1'-0"

STEVEN EHRLICH Architects

10865 WASHINGTON BLVD.
CULVER CITY, 90232.3600
TEL 310.838.9700
FAX 310.838.9737
WWW.S-EHRLICH.COM

PROJECT

Hoffman Castleman Residence

1445 El Bosque Ct, Pacific Palisades, CA

CONSULTANTS

NO.	DATE	REVISION

THIS DRAWING AND THE DESIGNS, ARRANGEMENTS, DEPICTIONS, IDEAS AND OTHER INFORMATION CONTAINED HEREIN CONSTITUTE UNPUBLISHED WORK OF STEVEN EHRLICH ARCHITECTS AND SHALL REMAIN PROPERTY OF STEVEN EHRLICH ARCHITECTS IN PERPETUITY. NO PART THEREOF SHALL BE REPRODUCED, COPIED, DISCLOSED, DISTRIBUTED, SOLD, PUBLISHED OR OTHERWISE USED IN ANYWAY WITHOUT THE ADVANCED EXPRESS WRITTEN CONSENT OF STEVEN EHRLICH ARCHITECTS. VISUAL CONTACT WITH THE ABOVE DRAWINGS, OR ANY PART THEREOF, SHALL CONSTITUE CONCLUSIVE EVIDENCE OF ACCEPTANCE OF THESE RESTRICTIONS.

SHEET TITLE

Wall Sections

DRAWN:	Author
SCALE:	1 1/2" = 1'-0"
STATUS:	Back Check
DATE:	04-28-10
FILE:	S:\Nmarble\Hoffman\Hoffman Central Print.rvt
JOB:	491

SHEET NUMBER:

A6.03

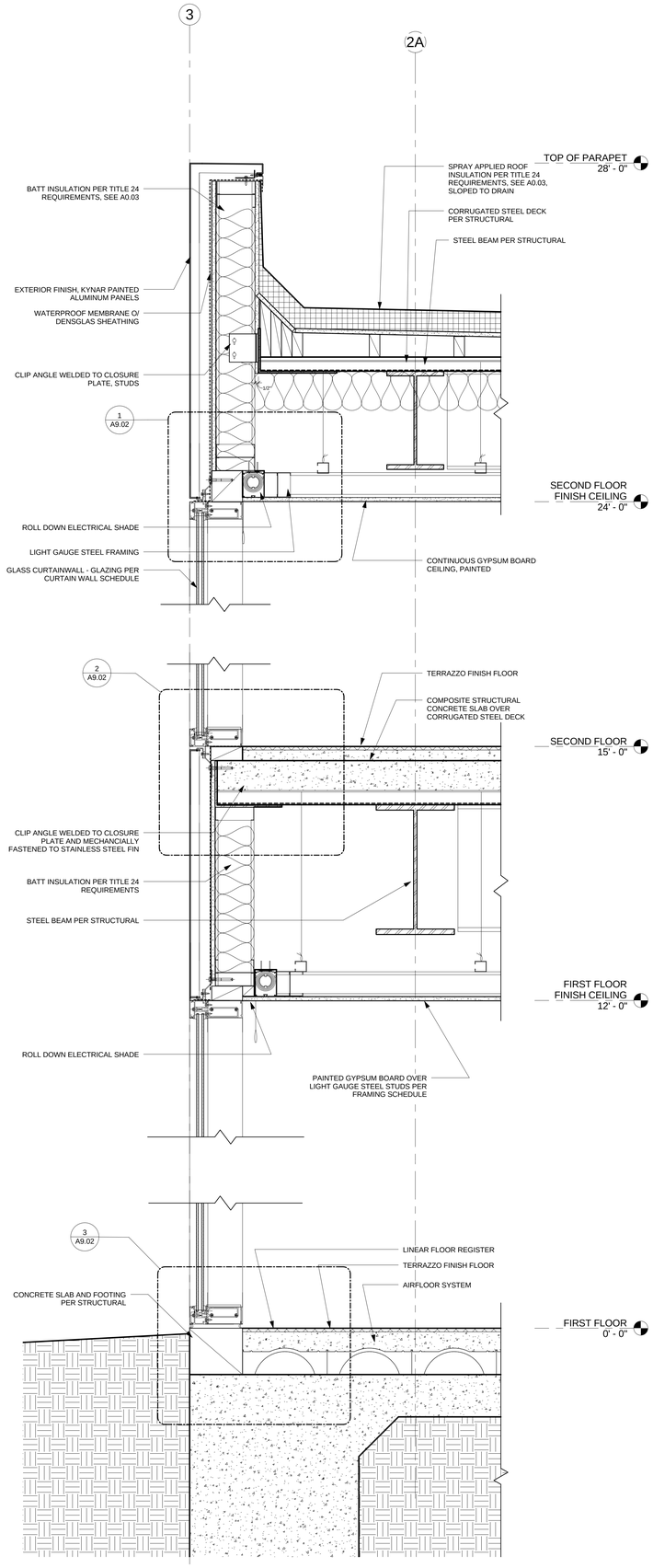

3 Wall Section @ Ellens Office Curtain Wall
1 1/2" = 1'-0"

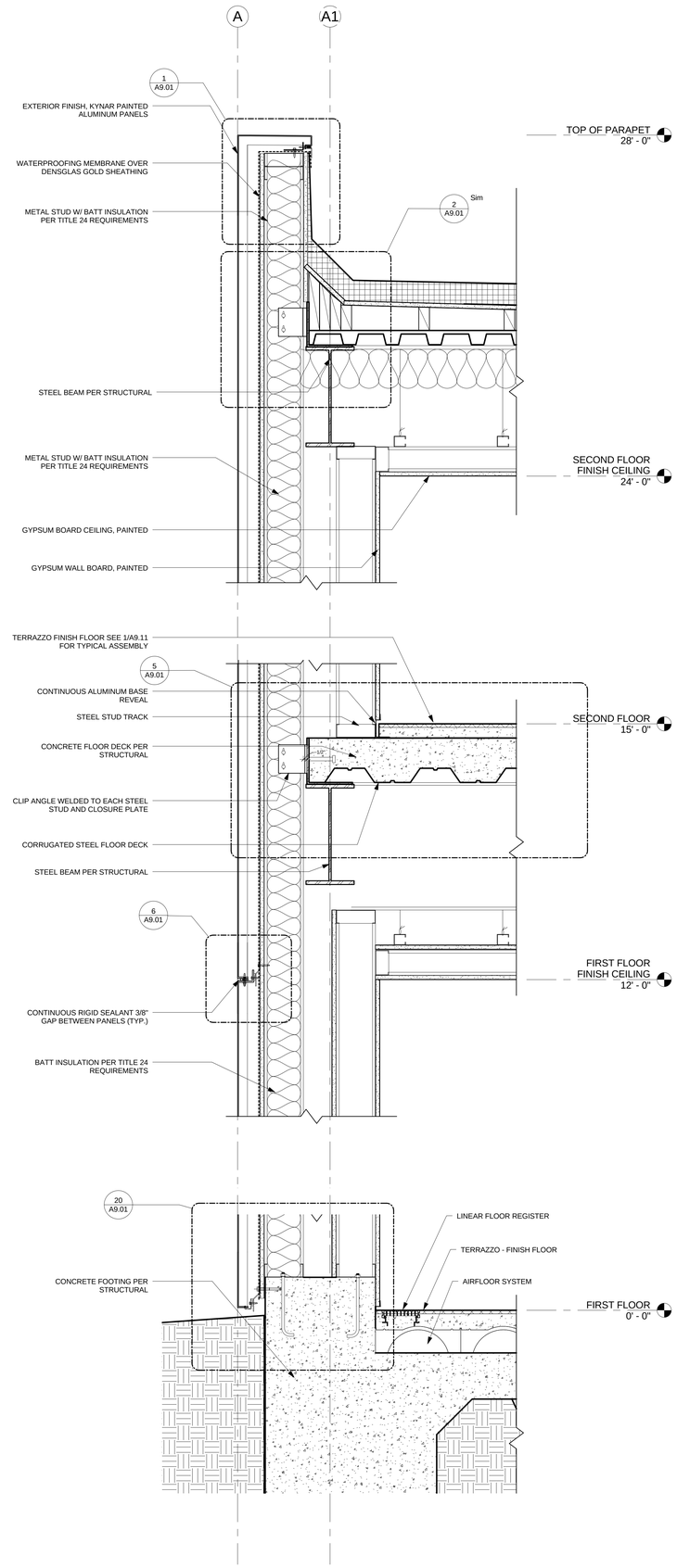

2 Wall Section @ Metal Panel
1 1/2" = 1'-0"

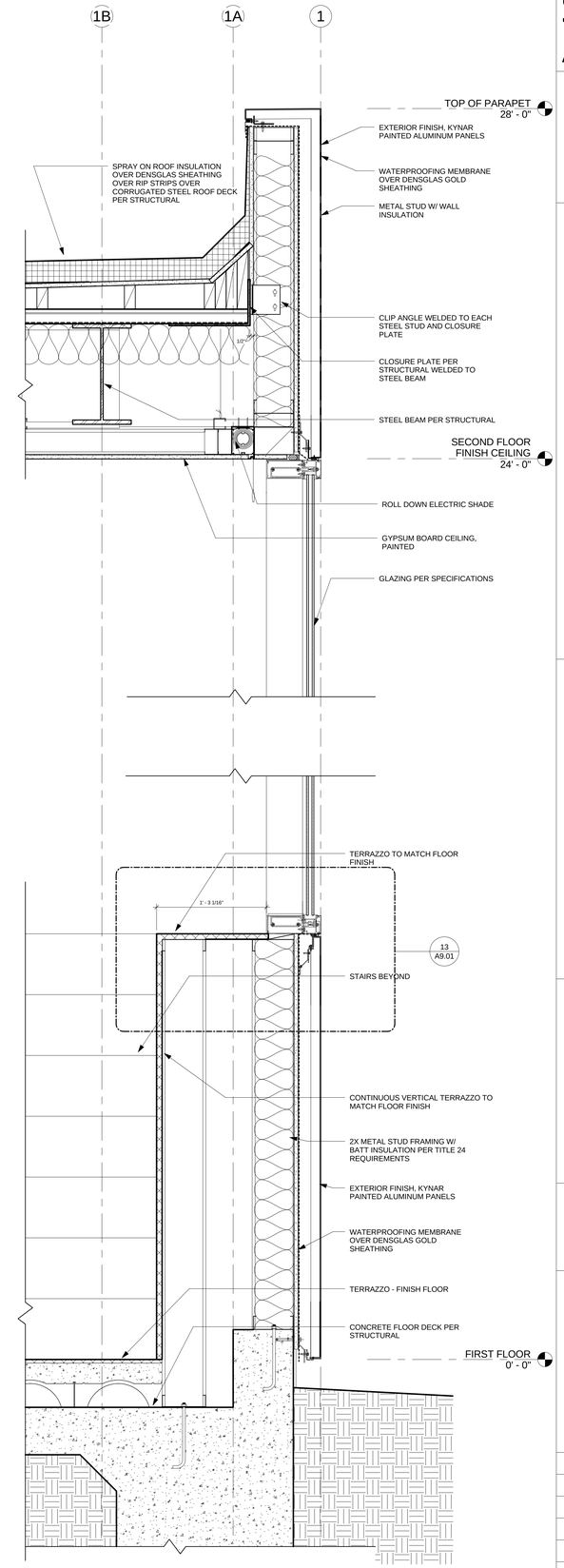

1 Wall Section @ Stair
1 1/2" = 1'-0"

STEVEN EHRLICH Architects

10865 WASHINGTON BLVD.
CULVER CITY, 90232.3600
TEL 310.838.9700
FAX 310.838.9737
WWW.S-EHRLICH.COM

PROJECT

Hoffman Castleman Residence

1445 El Bosque Ct, Pacific Palisades, CA

CONSULTANTS

NO.	DATE	REVISION

THIS DRAWING AND THE DESIGNS, ARRANGEMENTS, DEPICTIONS, IDEAS AND OTHER INFORMATION CONTAINED HEREIN CONSTITUTE UNPUBLISHED WORK OF STEVEN EHRLICH ARCHITECTS AND SHALL REMAIN PROPERTY OF STEVEN EHRLICH ARCHITECTS IN PERPETUITY. NO PART THEREOF SHALL BE REPRODUCED, COPIED, DISCLOSED, DISTRIBUTED, SOLD, PUBLISHED OR OTHERWISE USED IN ANYWAY WITHOUT THE ADVANCED EXPRESS WRITTEN CONSENT OF STEVEN EHRLICH ARCHITECTS. VISUAL CONTACT WITH THE ABOVE DRAWINGS, OR ANY PART THEREOF, SHALL CONSTITUE CONCLUSIVE EVIDENCE OF ACCEPTANCE OF THESE RESTRICTIONS.

SHEET TITLE

Wall Sections

DRAWN:	Author
SCALE:	1 1/2" = 1'-0"
STATUS:	Back Check
DATE:	04-28-10
FILE:	S:\Nmarble\Hoffman\Hoffman Central Print.rvt
JOB:	491

SHEET NUMBER:

A6.04

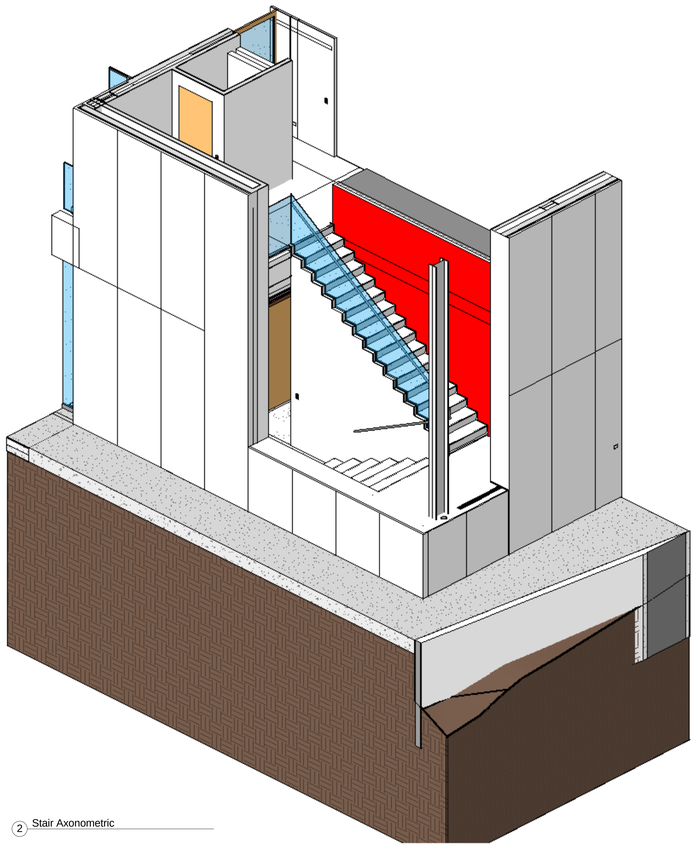

2 Stair Axonometric

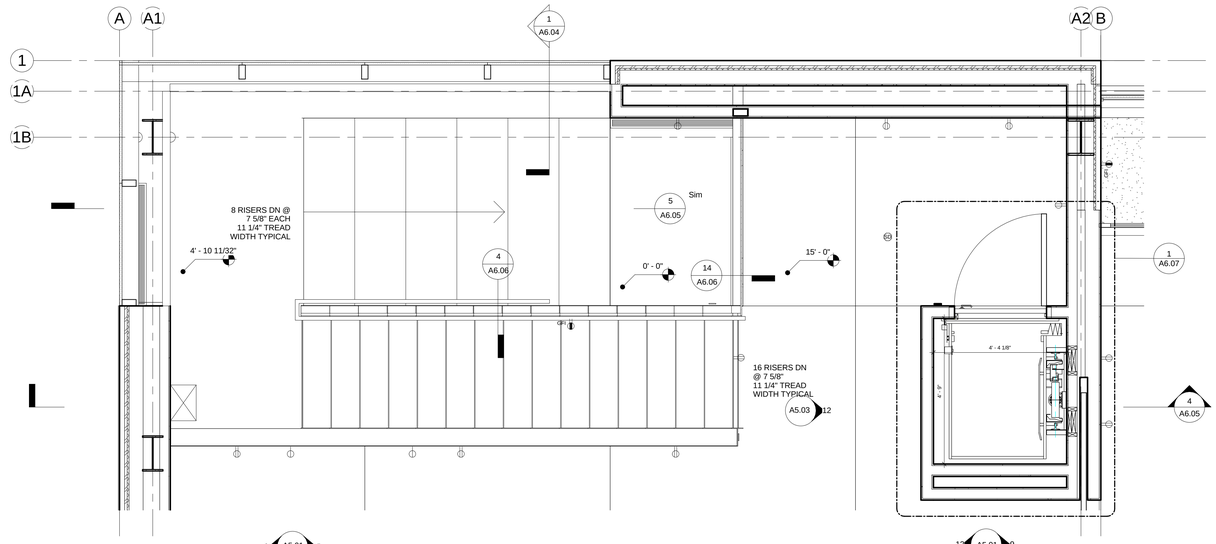

1 Enlarged Stair Plan
1/2" = 1'-0"

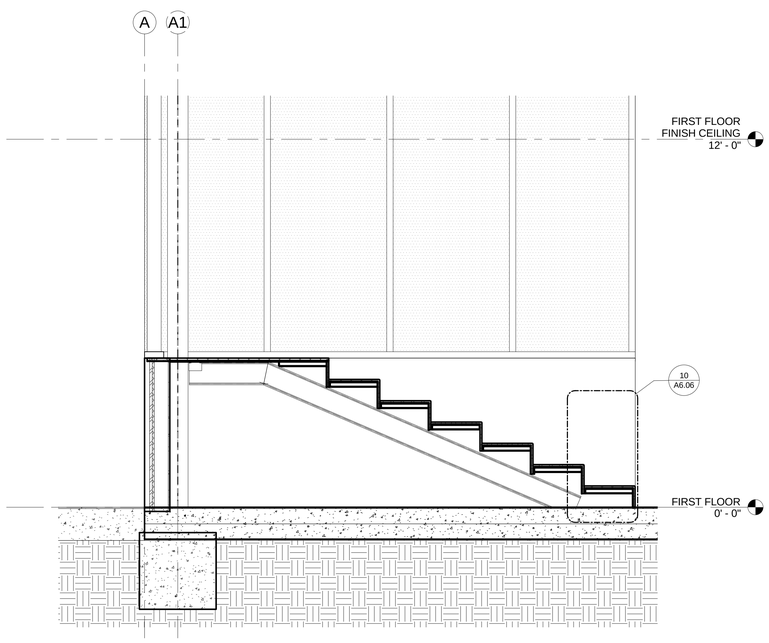

5 stair dtl 3
1/2" = 1'-0"

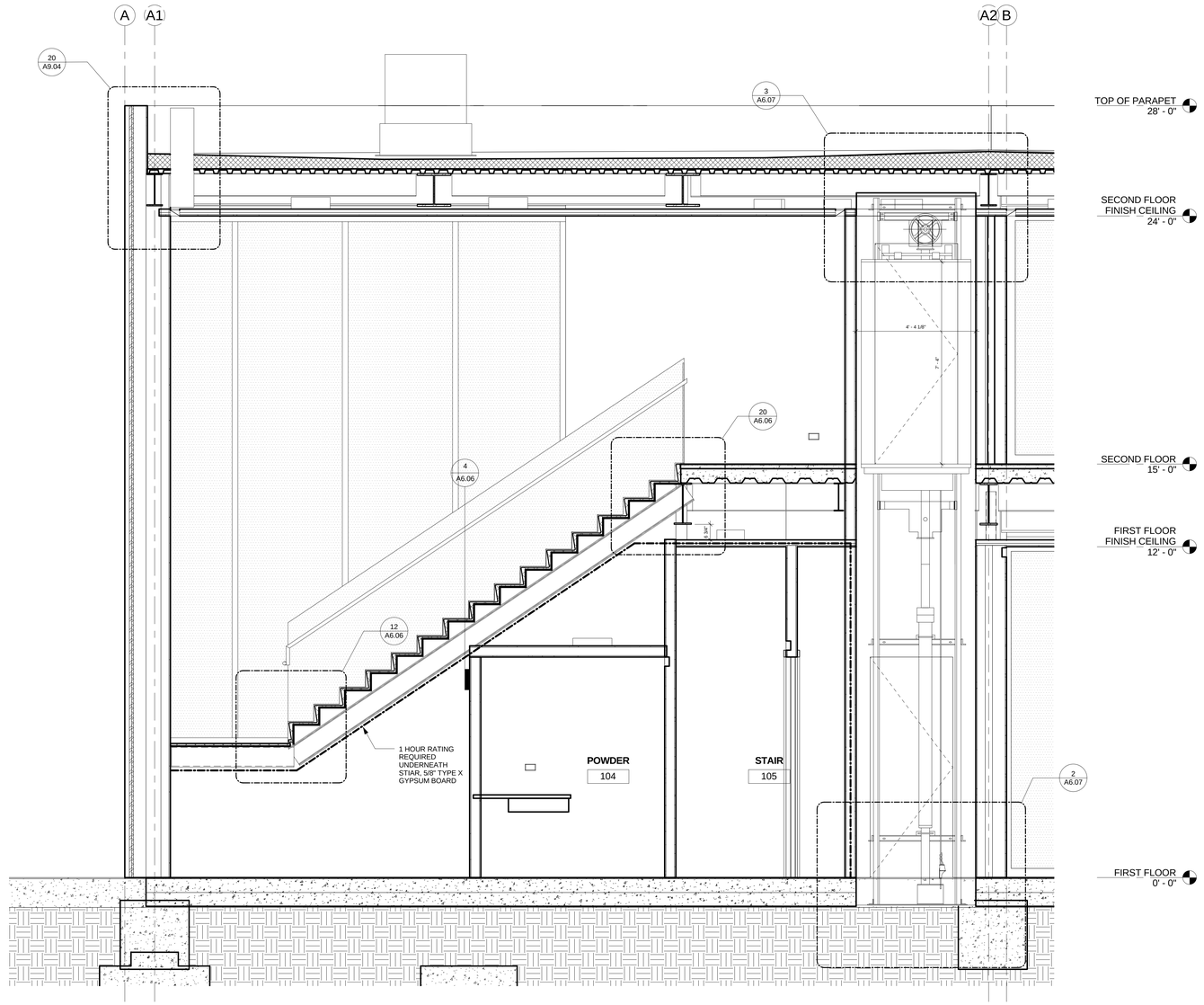

4 Enlarged Stair and Elevator Section
1/2" = 1'-0"

STEVEN EHRLICH
Architects

10865 WASHINGTON BLVD.
CULVER CITY, 90232.3600
TEL 310.838.9700
FAX 310.838.9737
WWW.S-EHRLICH.COM

PROJECT

Hoffman Castleman Residence

1445 El Bosque Ct, Pacific Palisades, CA

CONSULTANTS

NO.	DATE	REVISION

THIS DRAWING AND THE DESIGNS, ARRANGEMENTS, DEPICTIONS, IDEAS AND OTHER INFORMATION CONTAINED HEREIN CONSTITUTE UNPUBLISHED WORK OF STEVEN EHRLICH ARCHITECTS AND SHALL REMAIN PROPERTY OF STEVEN EHRLICH ARCHITECTS IN PERPETUITY. NO PART THEREOF SHALL BE REPRODUCED, COPIED, DISCLOSED, DISTRIBUTED, SOLD, PUBLISHED OR OTHERWISE USED IN ANYWAY WITHOUT THE ADVANCED EXPRESS WRITTEN CONSENT OF STEVEN EHRLICH ARCHITECTS. VISUAL CONTACT WITH THE ABOVE DRAWINGS, OR ANY PART THEREOF, SHALL CONSTITUE CONCLUSIVE EVIDENCE OF ACCEPTANCE OF THESE RESTRICTIONS.

SHEET TITLE

Enlarged Stair And Elevator Drawings

DRAWN:	Author
SCALE:	1/2" = 1'-0"
STATUS:	Back Check
DATE:	04-28-10
FILE:	S:\Nmarble\Hoffman\Hoffman Central Print.rvt
JOB:	491

SHEET NUMBER:

A6.05

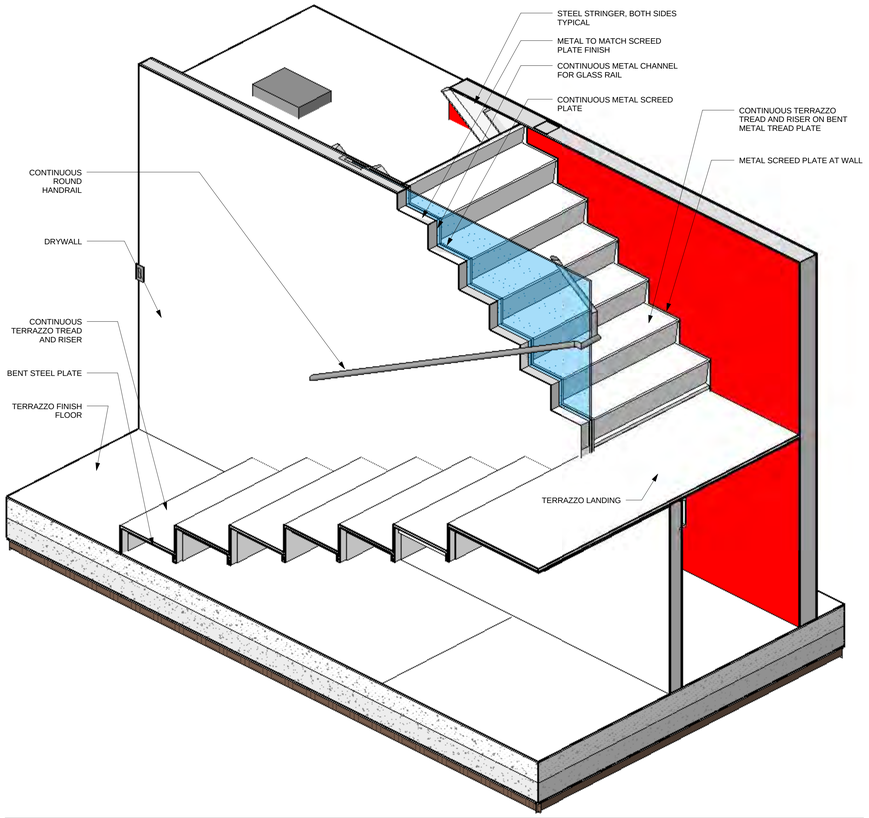

Copy (3) of Stair Axonometric 1

SCALE: | REF. SHEET: | REF. DETAIL:

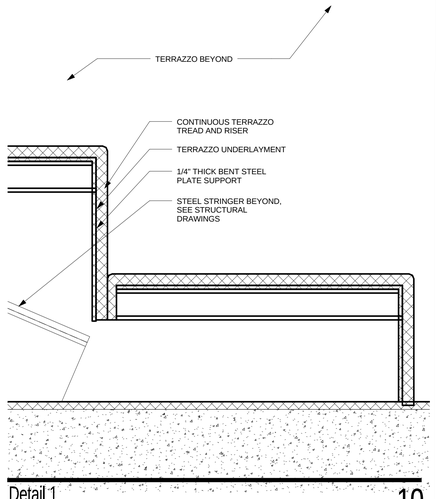

Detail 1 10

SCALE: 3" = 1'-0" | REF. SHEET: A6.05 | REF. DETAIL: 5

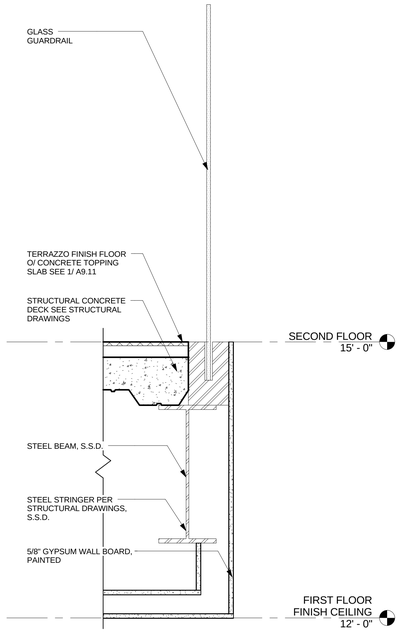

Guardrail @ 2nd floor 14

SCALE: 1 1/2" = 1'-0" | REF. SHEET: A4.02 | REF. DETAIL: 2

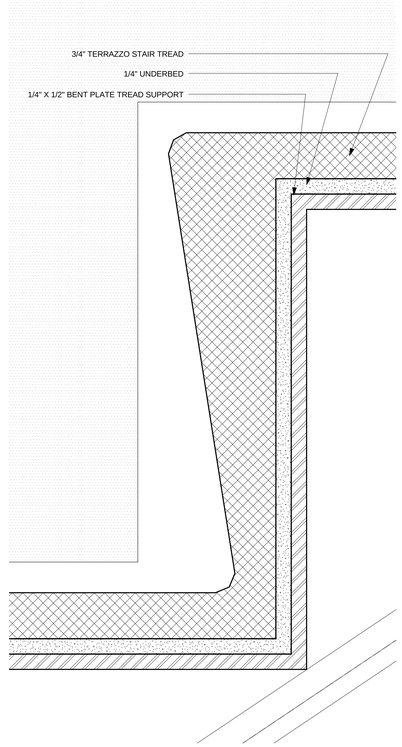

STAIR NOSING 17

SCALE: 1 : 1 | REF. SHEET: A6.06 | REF. DETAIL: 20

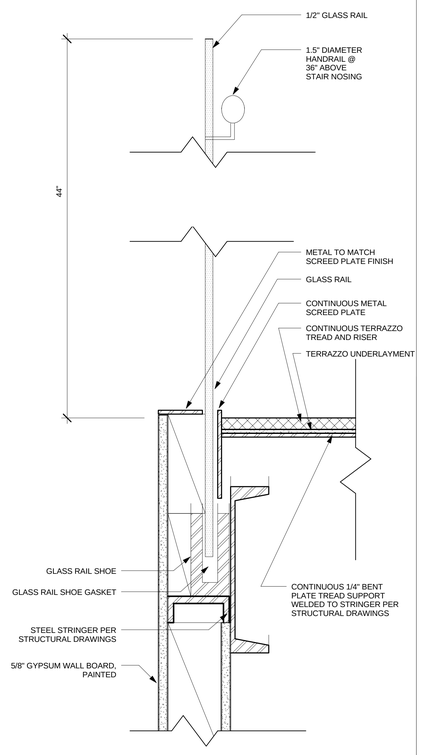

Stair Details - Middle of Stair 4

SCALE: 3" = 1'-0" | REF. SHEET: A6.05 | REF. DETAIL: 1

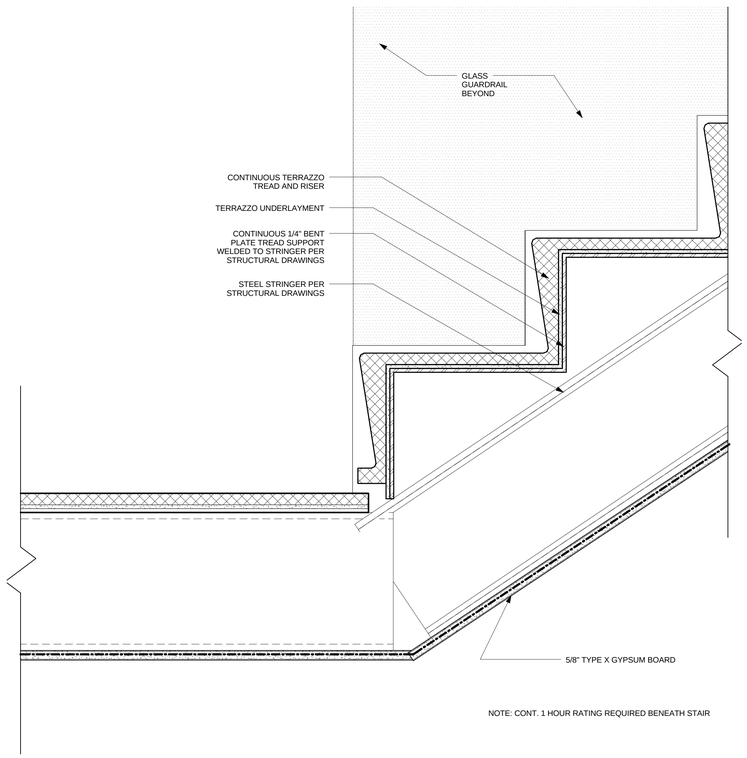

Stair at Landing 12

SCALE: 3" = 1'-0" | REF. SHEET: A6.05 | REF. DETAIL: 4

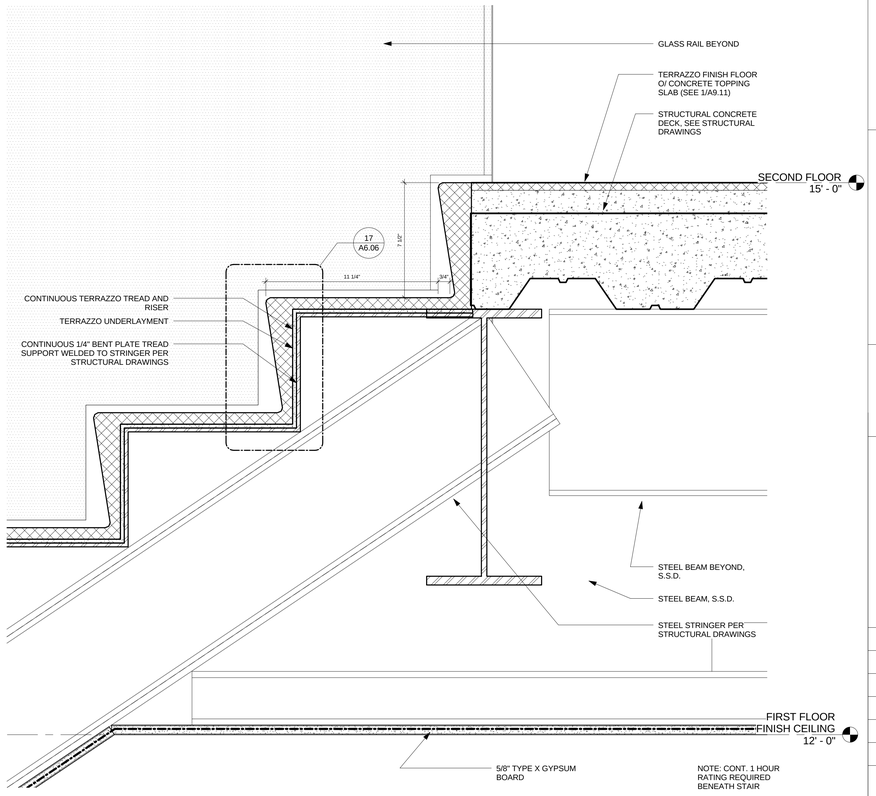

Stair Dtls - 1 20

SCALE: 3" = 1'-0" | REF. SHEET: A6.05 | REF. DETAIL: 4

STEVEN EHRLICH Architects

10865 WASHINGTON BLVD.
CULVER CITY, 90232.3600
TEL 310.838.9700
FAX 310.838.9737
WWW.S-EHRLICH.COM

PROJECT

Hoffman Castleman Residence

1445 El Bosque Ct, Pacific Palisades, CA

CONSULTANTS

NO.	DATE	REVISION

THIS DRAWING AND THE DESIGNS, ARRANGEMENTS, DEPICTIONS, IDEAS AND OTHER INFORMATION CONTAINED HEREIN CONSTITUTE UNPUBLISHED WORK OF STEVEN EHRLICH ARCHITECTS AND SHALL REMAIN PROPERTY OF STEVEN EHRLICH ARCHITECTS IN PERPETUITY. NO PART THEREOF SHALL BE REPRODUCED, COPIED, DISCLOSED, DISTRIBUTED, SOLD, PUBLISHED OR OTHERWISE USED IN ANYWAY WITHOUT THE ADVANCED EXPRESS WRITTEN CONSENT OF STEVEN EHRLICH ARCHITECTS. VISUAL CONTACT WITH THE ABOVE DRAWINGS, OR ANY PART THEREOF, SHALL CONSTITUE CONCLUSIVE EVIDENCE OF ACCEPTANCE OF THESE RESTRICTIONS.

SHEET TITLE

Stair Details

DRAWN:	Author
SCALE:	As indicated
STATUS:	Back Check
DATE:	04-28-10
FILE:	S:\Nmarble\Hoffman\Hoffman Central Print.rvt
JOB:	491

SHEET NUMBER:

A6.06

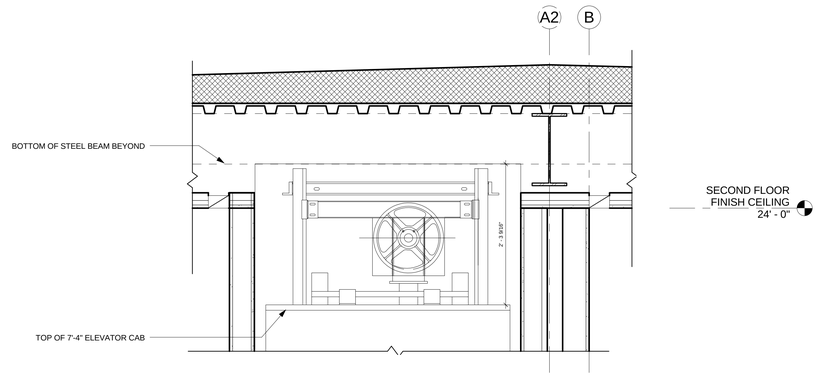

Top of Elevator 3

SCALE: 1" = 1'-0" | REF. SHEET: A6.05 | REF. DETAIL: 4

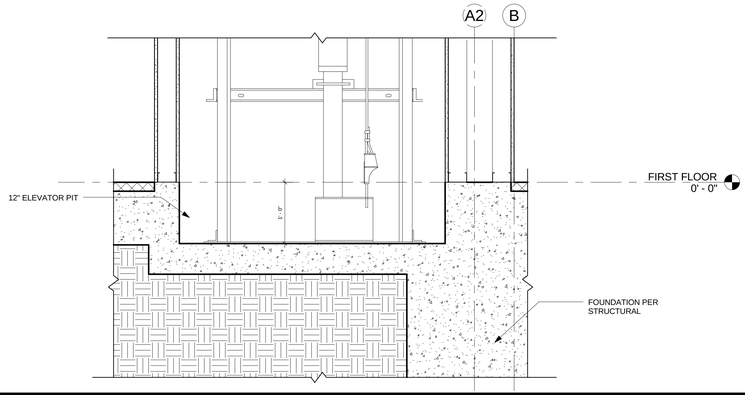

Elevator Pit 2

SCALE: 1" = 1'-0" | REF. SHEET: A6.05 | REF. DETAIL: 4

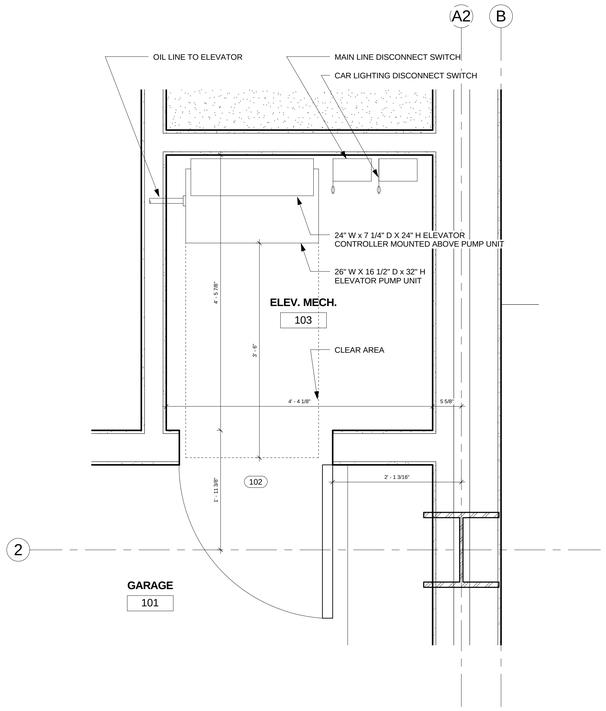

ELEVATOR MECHANICAL ROOM 4

SCALE: 1" = 1'-0" | REF. SHEET: A2.01 | REF. DETAIL: 1

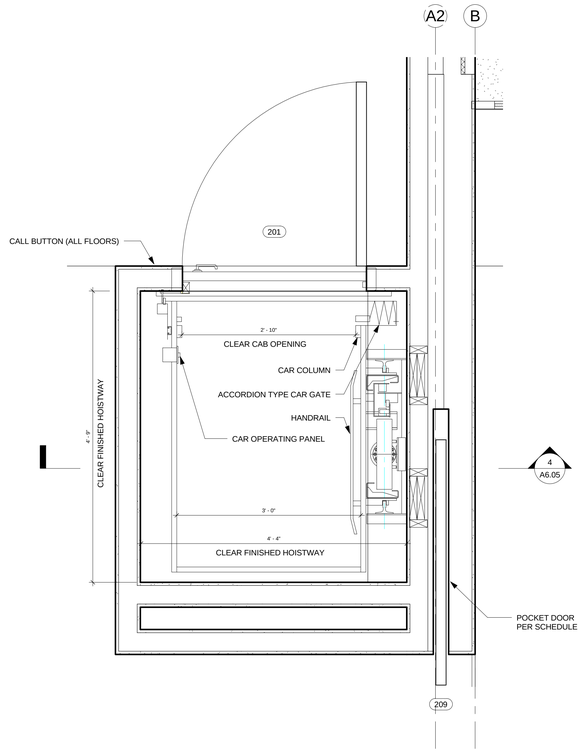

Elevator Plan 1

SCALE: 1" = 1'-0" | REF. SHEET: A6.05 | REF. DETAIL: 1

STEVEN EHRLICH Architects

10865 WASHINGTON BLVD.
CULVER CITY, 90232.3600
TEL 310.838.9700
FAX 310.838.9737
WWW.S-EHRLICH.COM

PROJECT

Hoffman Castleman Residence

1445 El Bosque Ct, Pacific Palisades, CA

CONSULTANTS

NO.	DATE	REVISION

THIS DRAWING AND THE DESIGNS, ARRANGEMENTS, DEPICTIONS, IDEAS AND OTHER INFORMATION CONTAINED HEREIN CONSTITUTE UNPUBLISHED WORK OF STEVEN EHRLICH ARCHITECTS AND SHALL REMAIN PROPERTY OF STEVEN EHRLICH ARCHITECTS IN PERPETUITY. NO PART THEREOF SHALL BE REPRODUCED, COPIED, DISCLOSED, DISTRIBUTED, SOLD, PUBLISHED OR OTHERWISE USED IN ANYWAY WITHOUT THE ADVANCED EXPRESS WRITTEN CONSENT OF STEVEN EHRLICH ARCHITECTS. VISUAL CONTACT WITH THE ABOVE DRAWINGS, OR ANY PART THEREOF, SHALL CONSTITUE CONCLUSIVE EVIDENCE OF ACCEPTANCE OF THESE RESTRICTIONS.

SHEET TITLE

Elevator Details

DRAWN:	Author
SCALE:	1" = 1'-0"
STATUS:	Back Check
DATE:	04-28-10
FILE:	S:\Nmarble\Hoffman\Hoffman Central Print.rvt
JOB:	491

SHEET NUMBER:

A6.07

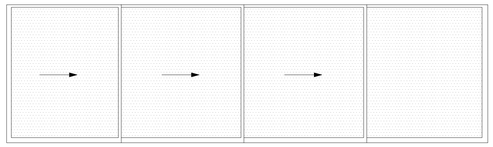

EX21

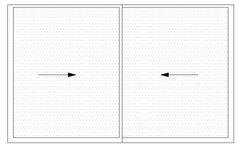

EX22 + EX23

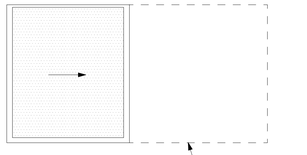

EX24

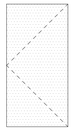

EX3

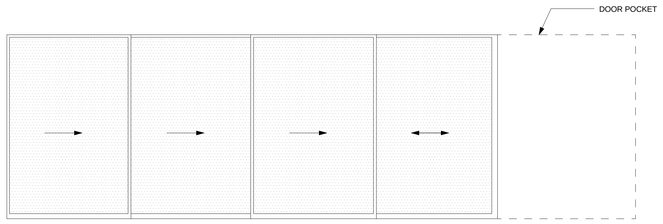

EX1 + EX2

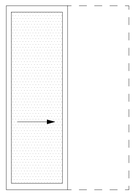

EX 6

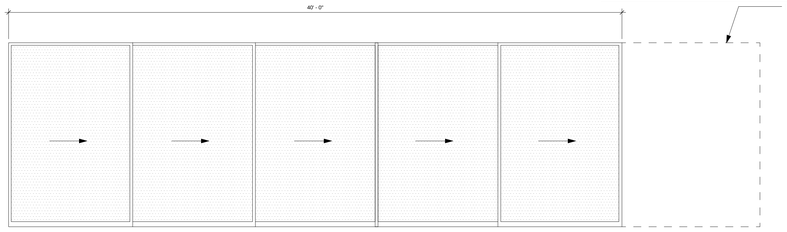

EX 4

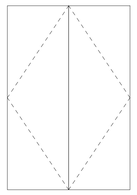

EX 7

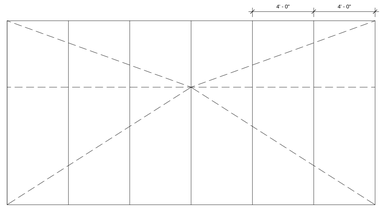

EX 5

EXTERIOR DOOR SCHEDULE

Mark	Height	Width	Comments	Head	Jambs	Sill
EX1	12' - 0"	32' - 0"	ELECTRICALLY OPERATED, .5" TEMPERED LAMINATED GLAZING, POCKETING	(11) A9.02	(7+11) A9.03	(12) A9.02
EX2	12' - 0"	32' - 0"	ELECTRICALLY OPERATED, .5" TEMPERED LAMINATED GLAZING, POCKETING	(11) A9.02	(7+11) A9.03	(12) A9.02
EX3	8' - 0"	4' - 0"	DUAL GLAZED, COORDINATE WITH CW3	(8) A9.03	(3+4) A9.03	(7) A9.03
EX4	11' - 8"	40' - 0"	ELECTRICALLY OPERATED, .5" TEMPERED LAMINATED GLAZING, POCKETING, VERIFY HEIGHT IN FIELD	(19) A9.01	(9+13) A9.03	(18) A9.01
EX5	12' - 0"	24' - 0"	GARAGE DOOR, CLAD IN METAL PANEL SIM. TO EXTERIOR OF BUILDING	(18) A9.02	(19) A9.02	(17) A9.02
EX6	12' - 0"	4' - 0"	DUAL GLAZED, COORDINATE WITH CW1, WITH BUG SCREEN	(1) A9.01	(7) A9.02	(5) A9.01
EX7	12' - 0"	8' - 0"	CLAD IN METAL PANEL TO MATCH BUILDING EXTERIOR			(15)A9.02
EX21	9' - 0"	31' - 4 3/8"	DUAL GLAZED			
EX22	9' - 0"	14' - 8 5/8"	DUAL GLAZED			
EX23	9' - 0"	14' - 9"	DUAL GLAZED	(16)A9.03		(15)A9.03
EX24	9' - 0"	7' - 4"	DUAL GLAZED, POCKETING		(12) A9.03	
EX25	9' - 0"	4' - 0"	DUAL GLAZED, POCKETING	(2)A9.02	(2)A9.02 SIM.	(1)A9.02
EX26	9' - 0"	8' - 0"	DUAL GLAZED, POCKETING	(2)A9.02	(12)A9.03	(1)A9.02
EX27	9' - 0"	4' - 0"	DUAL GLAZED, POCKETING, WITH BUG SCREEN	(3)A9.01	(17)A9.03	(1)A9.01

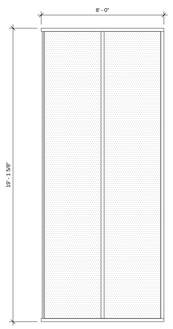

CW5

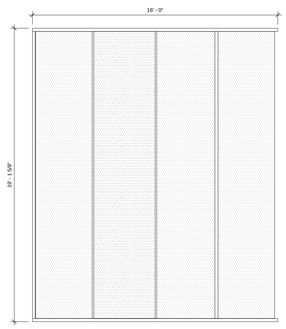

CW4

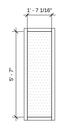

CW2

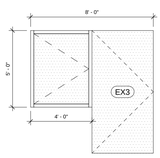

CW3

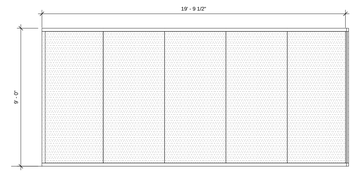

CW1

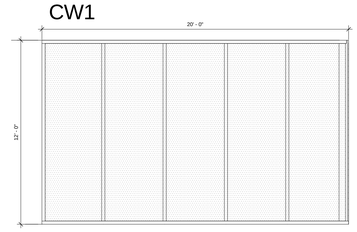

CW9

WINDOW SCHEDULE

Mark	Length	Height	Comments	Head	Jamb	Sill
CW1	20'-0"	9'-0"	DUAL GLAZED TEMPERED		(11) A9.03	
CW2	2'-0"	6'-0"	DUAL GLAZED TEMPERED	(2)A9.02		(5)A9.02
CW3	4'-0"	5'-0"	OPERABLE, DUAL GLAZED TEMPERED, COORDINATE WITH DOOR EX3		(2+3) A9.03	
CW4	16'-0"	19'-1 5/8"	DUAL GLAZED TEMPERED		(14)A9.01	
CW5	8'-0"	19'-1 5/8"	DUAL GLAZED TEMPERED		(14)A9.01	
CW9	19'-2 1/2"	12'-0"	DUAL GLAZED TEMPERED		(5)A9.03	

S1

S2

Skylight Schedule

Type Mark	Height	Width	Comments
S1	2' - 0"	2' - 0"	OPERABLE
S1	2' - 0"	2' - 0"	OPERABLE
S1	2' - 0"	2' - 0"	OPERABLE
S1	2' - 0"	2' - 0"	OPERABLE
S2	6' - 0"	2' - 2"	OPERABLE

GENERAL NOTES

1. DIRECTION OF OPERATION SHOWN FROM THE EXTERIOR OF DOOR/ WINDOW.

2. EACH UNIT OF TEMPERED GLASS SHALL BE PERMANENTLY IDENTIFIED BY THE MANUFACTURER,THE IDENTIFICATION SHALL BE ETCHED OR CERAMIC FIRED ON THE GLASS AND BE VISIBLE WHEN THE UNIT IS GLAZED.

3. ALL GLASS LITES IN DOORS AND SIDE LITES TO BE TEMPERED.

4. GLAZING IN DOORS AND ENCLOSURES FOR BATHTUBS AND SHOWERS SHALL HAVE CATEGORY II CLASSIFICATION PER CBC CHAPTER 24 AND UBC STD 24-2.

5. SLIDING WINDOWS SHALL BE PROVIDED WITH A DEVICE IN THE UPPER CHANNEL OF THE MOVING PANEL TO PROHIBIT RAISING AND REMOVING OF THE MOVING PANEL IN THE CLOSED OR PARTIALLY OPEN POSITION.

6. SAFETY GLAZING IS REQUIRED AT THE FOLLOWING LOCATIONS:
   A) GLAZING IN INGRESS AND EGRESS DOORS.
   B) GLAZING IN PANELS HAVING AN AREA IN EXCESS OF 9 SQUARE FEET AND THE LOWER EDGE LESS THAN 18 INCHES ABOVE A WALKING SURFACE WITHIN 36 INCHES.
   C) GLAZING WITHIN 40" OF THE DOOR LOCK WHEN THE DOOR IS IN THE CLOSED POSITION. SHALL BE FULLY TEMPERED GLASS OR APPROVED BURGLARY RESISTANT MATERIAL, OR SHALL BE PROTECTED BY METAL BARS, SCREENS OR GRILLS HAVING A MAXIMUM OPENING OF 2 INCHES.THE PROVISIONS OF THIS SECTION SHALL NOT APPLY TO VIEW PORTS OR WINDOWS WHICH DO NOT EXCEED 2 INCHES IN THEIR GREATEST DIMENSIONS.
   D) GLAZING LOCATED WITHIN 40 INCHES OF A DOOR WHEN THE BOTTOM EDGE IS LESS THAN 60 INCHES ABOVE THE FLOOR OR WALKING SURFACE.

7. GLAZING IN HAZARDOUS LOCATIONS SHALL BE TEMPERED. 91.2406.4
   A) INGRESS AND EGRESS DOORS
   B) PANELS IN SLIDING OR SWINGING DOORS
   C) DOORS AND ENCLOSURE FOR HOT TUB, BATHTUB, SHOWERS (ALSO GLAZING IN WALL ENCLOSING THESE COMPARTMENTS WITHIN 5 FEET OF STANDING SURFACE)
   D) IF WITHIN 2 FEET OF VERTICAL EDGE OF CLOSED DOOR AND WITHIN 5 FEET OF STANDING SURFACE.
   E) IN WALL ENCLOSING STAIRWAY LANDING.

8. SLIDING WINDOWS SHALL BE EQUIPPED WITH LOCKING DEVICES AND SHALL BE SO CONSTRUCTED AND INSTALLED THAT THEY REMAIN INTACT AND ENGAGED WHEN SUBJECTED TO THE TESTS SPECIFIED IN CODE SECTION 91.6717.2

9. DOORS BETWEEN GARAGE AND THE DWELLING INIT SHALL BE SELF-CLOSING AND SELF-LATCHING, SOLID WOOD OR SOLID OR HONEYCOMB CORE STEEL NOT LESS THAN 1 3/8" INCHES THICK , OR HAVE A MINIMUM FIRE PROTECTION RATING OF 20 MINUTES. (406.1.4)

STEVEN EHRLICH Architects

10865 WASHINGTON BLVD.
CULVER CITY, 90232.3600
TEL 310.838.9700
FAX 310.838.9737
WWW.S-EHRLICH.COM

PROJECT

Hoffman Castleman Residence

1445 El Bosque Ct, Pacific Palisades, CA

CONSULTANTS

NO.	DATE	REVISION

THIS DRAWING AND THE DESIGNS, ARRANGEMENTS, DEPICTIONS, IDEAS AND OTHER INFORMATION CONTAINED HEREIN CONSTITUTE UNPUBLISHED WORK OF STEVEN EHRLICH ARCHITECTS AND SHALL REMAIN PROPERTY OF STEVEN EHRLICH ARCHITECTS IN PERPETUITY. NO PART THEREOF SHALL BE REPRODUCED, COPIED, DISCLOSED, DISTRIBUTED, SOLD, PUBLISHED OR OTHERWISE USED IN ANYWAY WITHOUT THE ADVANCED EXPRESS WRITTEN CONSENT OF STEVEN EHRLICH ARCHITECTS. VISUAL CONTACT WITH THE ABOVE DRAWINGS, OR ANY PART THEREOF, SHALL CONSTITUE CONCLUSIVE EVIDENCE OF ACCEPTANCE OF THESE RESTRICTIONS.

SHEET TITLE

Window, Exterior Door, and Skylight Schedules

DRAWN: Author

SCALE: 1/4" = 1'-0"

STATUS: Back Check

DATE: 04-28-10

FILE: S:\Nmarble\Hoffman\Hoffman Central Print.rvt

JOB: 491

SHEET NUMBER:

A7.01

INTERIOR DOOR SCHEDULE

		SIZE		DOOR					FRAME		DETAILS					
Mark	Door Type	Width	Height	Thickness	Core	Face	Finish	Glass	Frame Type	Frame Material	Head	Sill	Strike	Hinge	Hardware	Comments
101	A	3' - 6"	8' - 0"	0' - 2"	1 3/8" MIN. SOLID											20 MIN. RATED - Self-closing and self-latching
102	B	2' - 6"	8' - 0"	0' - 2"												20 MIN. RATED
103	A	3' - 6"	8' - 0"	0' - 2"												20 MIN. RATED
104	E	3' - 0"	8' - 0"	0' - 2"												
105	H	2' - 10"	8' - 0"	0' - 1 1/2"												
108	E	3' - 0"	8' - 0"	0' - 2"												
110		2' - 0"	9' - 0"	0' - 2"												
201	E	3' - 0"	8' - 0"	0' - 2"												
202	E	3' - 0"	8' - 0"	0' - 2"												
203	G	2' - 8"	8' - 0"	0' - 2"												
204	G	2' - 8"	8' - 0"	0' - 2"												
205	H	4' - 0"	8' - 0"	0' - 2"				1/2" TEMP.								Pocket, mirrored on surface facing closet
206		4' - 9 3/4"	9' - 0"	0' - 2"												Pocket
207	E	3' - 0"	8' - 0"	0' - 2"												
208	H	4' - 0"	8' - 0"	0' - 2"				1/2" TEMP.								Pocket, mirrored on surface facing closet
209		4' - 0"	9' - 0"	0' - 2"												Pocket
210	C	8' - 0"	8' - 0"	0' - 2"												
211		5' - 7 1/2"	9' - 0"	0' - 2"												
212		5' - 7 1/2"	9' - 0"	0' - 2"												
213		5' - 7 1/2"	9' - 0"	0' - 2"												
214		5' - 7 1/2"	9' - 0"	0' - 2"												
215		10' - 0"	9' - 0"	0' - 1 1/2"												
219		8' - 0"	8' - 0"	0' - 2"												

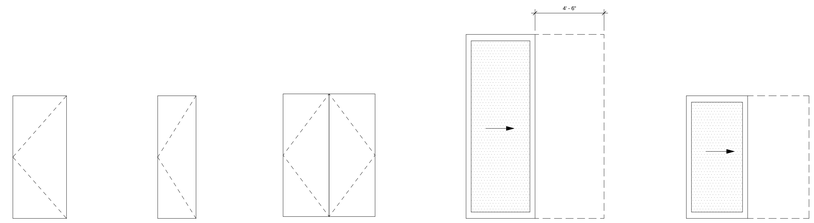

A B, E, G C F H, I

GENERAL DOOR NOTES

1. PROVIDE AN ALARM FOR DOORS TO THE DWELLING THAT FORM A PART OF THE POOL ENCLOSURE. THE ALARM SHALL SOUND CONTINUOUSLY FOR A MIN. OF 30 SECONDS WHEN THE DOOR IS OPENED. IT SHALL AUTOMATICALLY RESET AND BE EQUIPPED WITH A MANUAL MEAN TO DEACTIVATE (FOR 15 SECONDS MAX.) FOR A SINGLE OPENING. THE DEACTIVATION SWITCH SHALL BE AT LEAST 54" ABOVE THE FLOOR.

2. AT LEAST ONE EXIT DOORWAY SHALL NOT BE LESS THAN 3'-0" WIDE AND 6'-8" HIGHT AND SHALL BE SO MOUNTED THAT THE CLEAR WIDTH OF 32" IS MAINTAINED.

3. THE EXTERIOR DOORS MUST OPEN OVER A LANDING NOT MORE THAN 1" BELOW THE THRESHOLD. EXCEPTION: PROVIDING THE DOOR DOES NOT SWING OVER THE LANDING, THE LANDING SHALL BE NOT MORE THAN 8" BELOW THE THRESHOLD.
4. WOOD FLUSH-TYPE DOORS SHALL BE 1 3/8" THICK MIN. WITH SOLID CORE CONSTRUCTION.

5. DOOR STOPS OF IN-SWINGING DOORS SHALL BE OF ONE-PIECE CONSTRUCTION WITH THE JAMB OR JOINED BY RABBET TO THE JAMB.

6. ALL PIN-TYPE DOOR HINGES ACCESSIBLE FROM OUTSIDE SHALL HAVE NON-REMOVABLE HINGE PINS. HINGES SHALL HAVE MIN. 1/4" DIA. STEEL JAMB STUD WITH 1/4" MIN. PROTECTION. THE STRIKE PLATE FOR LATCHES AND HOLDING DEVICE FOR PROJECTING DEAD BOLTS IN WOOD CONSTRUCTION SHALL BE SECURED TO THE JAMB AND THE WALL FRAMING WITH SCREWS NO LESS THAN 2-1/2" LONG.

7. PROVIDE DEADBOLTS WITH HARDENED INSERTS; DEADLOCKING LATCH WITH KEY-OPERATED LOCKS ON EXTERIOR. LOCKS MUST BE OPENABLE FROM INSIDE WITHOUT KEY, SPECIAL KNOWLEDGE OR SPECIAL EFFORT.

8. STRAIGHT DEADBOLTS SHALL HAVE A MIN. THROW OF 1" AND AN EMBEDMENT OF NOT LESS THAN 5/8", AND A HOOK-SHAPED OR AN EXPANDING-LUG DEADBOLT SHALL HAVE A MIN. THROW OF 3/4"

9. THE USE OF A LOCKING SYSTEM WHICH CONSISTS OF A DEADLOCKING LATCH OPERATED BY A DOORKNOB AND A DEADBOLT OPERATED BY A NON-REMOVABLE THUMB TURN WHICH IS INDEPENDENT OF THE DEADLOCKING LATCH AND WHICH MUST BE SEPARATELY OPERATED, SHALL NOT BE CONSIDERED AS A SYSTEM WHICH REQUIRES SPECIAL KNOWLEDGE OR EFFORT WHEN USED IN DWELLING UNITS. THE DOOR KNOB AND THE THUMB TURN WHICH OPERATES THE DEADBOLT SHALL NOT BE SEPARATED BY MORE THAN 8 INCHES.

10. WOOD PANEL TYPE DOORS MUST HAVE PANELS AT LEAST 9/16" THICK WITH SHAPED PORTIONS NOT LESS THAN 1/4" THICK AND INDIVIDUAL PANELS MUST BE NO MORE THAN 300 SQ. IN. IN AREA. MULLIONS SHALL BE CONSIDERED A PART OF ADJACENT PANELS EXCEPT MULLIONS NOT OVER 18" LONG MAY HAVE AN OVERALL WIDTH OF NOT LESS THAN 2". STILES AND RAILS SHALL BE OF SOLID LUMBER IN THICKNESS WITH OVERALL DIMENSIONS OF NOT LESS THAN 1 3/8" AND 3" IN WIDTH.

11. SLIDING DOORS SHALL BE PROVIDED WITH A DEVICE IN THE UPPER CHANNEL OF THE MOVING PANEL TO PROHIBIT RAISING AND REMOVING OF THE MOVING PANEL IN THE CLOSED OR PARTIALLY OPEN POSITION.

12. SLIDING GLASS DOORS SHALL BE EQUIPPED WITH LOCKING DEVICES AND SHALL BE SO CONSTRUCTED AND INSTALLED THAT THEY REMAIN INTACT AND ENGAGED WHEN SUBJECTED TO THE TESTS SPECIFIED IN CODE SECTION 91.6717.1

13. FIRE RESISTIVE ASSEMBLIES FOR PROTECTION OF OPENINGS TO COMPLY WITH TITLE 24, SECTIONS 302 AND 713.

14. GLAZED OPENINGS WITHIN 40" OF THE DOOR LOCK WHEN THE DOOR IS IN THE CLOSED POSITION SHALL BE FULLY TEMPERED GLASS OR APPROVED BURGLARY RESISTANT MATERIAL, OR SHALL BE PROTECTED BY METAL BARS, SCREENS OR GRILLS HAVING A MAX. OPENING OF 2". THE PROVISIONS OF THIS SECTION SHALL NOT APPLY TO VIEW PORTS OR WINDOWS THAT DO NOT EXCEED 2" IN THEIR GREATEST DIMENSION.

STEVEN EHRLICH Architects

10865 WASHINGTON BLVD.
CULVER CITY, 90232.3600
TEL 310.838.9700
FAX 310.838.9737
WWW.S-EHRLICH.COM

PROJECT

Hoffman Castleman Residence

1445 El Bosque Ct, Pacific Palisades, CA

CONSULTANTS

NO.	DATE	REVISION

THIS DRAWING AND THE DESIGNS, ARRANGEMENTS, DEPICTIONS, IDEAS AND OTHER INFORMATION CONTAINED HEREIN CONSTITUTE UNPUBLISHED WORK OF STEVEN EHRLICH ARCHITECTS AND SHALL REMAIN PROPERTY OF STEVEN EHRLICH ARCHITECTS IN PERPETUITY. NO PART THEREOF SHALL BE REPRODUCED, COPIED, DISCLOSED, DISTRIBUTED, SOLD, PUBLISHED OR OTHERWISE USED IN ANYWAY WITHOUT THE ADVANCED EXPRESS WRITTEN CONSENT OF STEVEN EHRLICH ARCHITECTS. VISUAL CONTACT WITH THE ABOVE DRAWINGS, OR ANY PART THEREOF, SHALL CONSTITUE CONCLUSIVE EVIDENCE OF ACCEPTANCE OF THESE RESTRICTIONS.

SHEET TITLE

Interior Door and Finish Schedules

DRAWN: Author

SCALE: 1/4" = 1'-0"

STATUS: Back Check

DATE: 04-28-10

FILE: S:\Nmarble\Hoffman\Hoffman Central Print.rvt

JOB: 491

SHEET NUMBER:

A7.02

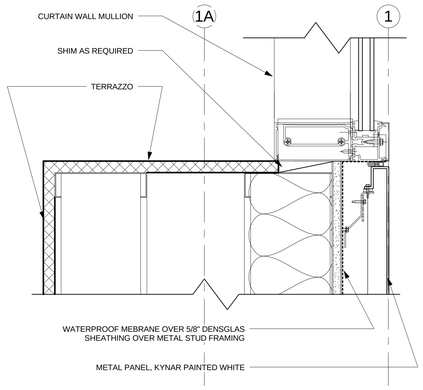

CURTAIN WALL SILL @ STAIR 13

SCALE: 3" = 1'-0" | REF. SHEET: A6.04 | REF. DETAIL: 1

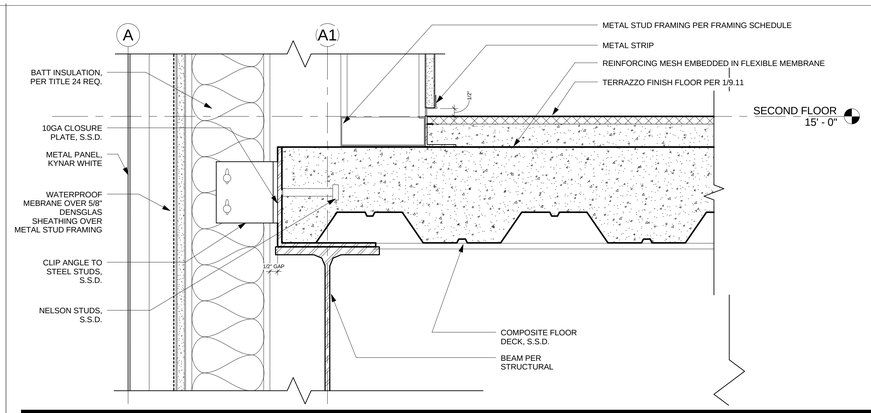

METAL PANEL AT 2ND FLOOR LEVEL 5

SCALE: 3" = 1'-0" | REF. SHEET: A6.04 | REF. DETAIL: 2

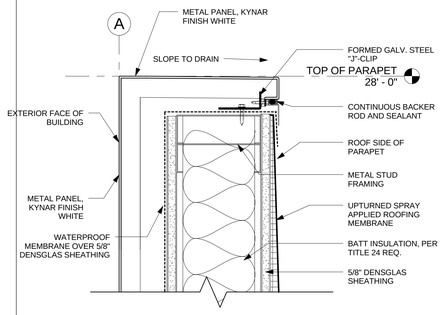

METAL PANEL PARAPET CAP 1

SCALE: 3" = 1'-0" | REF. SHEET: A6.01 | REF. DETAIL: 1

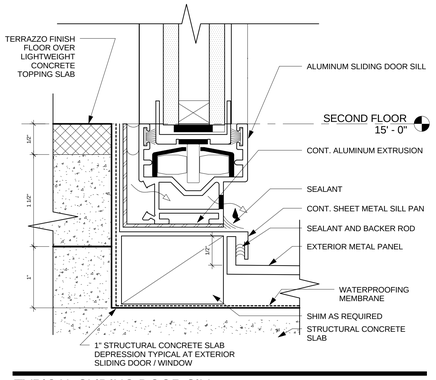

TYPICAL SLIDING DOOR SILL 18

SCALE: 12" = 1'-0" | REF. SHEET: A9.01 | REF. DETAIL: 4

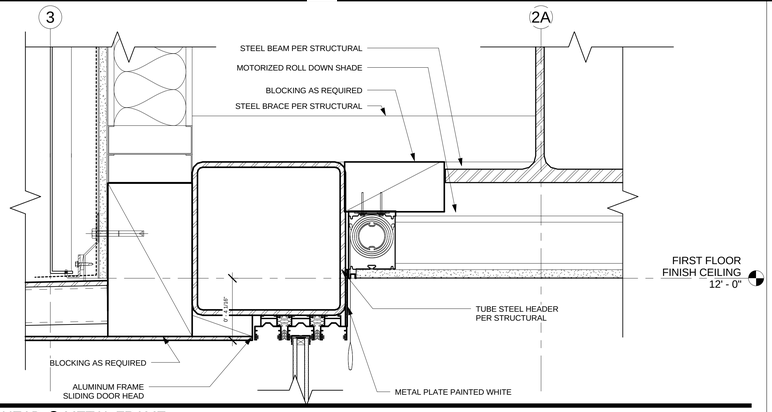

SLIDING DOOR HEAD @ METAL FRAME 10

SCALE: 3" = 1'-0" | REF. SHEET: A6.02 | REF. DETAIL: 3

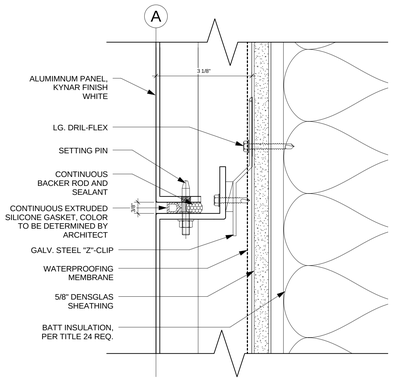

METAL PANEL HORIZONTAL JOINT (TYP.) 6

SCALE: 6" = 1'-0" | REF. SHEET: A6.03 | REF. DETAIL: 2

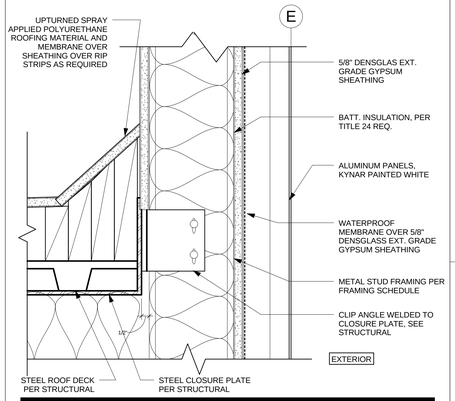

WALL FRAMING AT ROOF 2

SCALE: 3" = 1'-0" | REF. SHEET: A6.01 | REF. DETAIL: 1

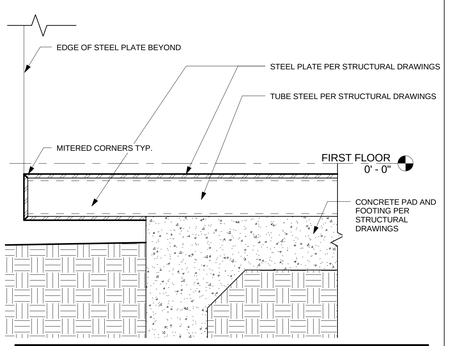

METAL FRAME EDGE 19

SCALE: 3" = 1'-0" | REF. SHEET: A6.02 | REF. DETAIL: 2

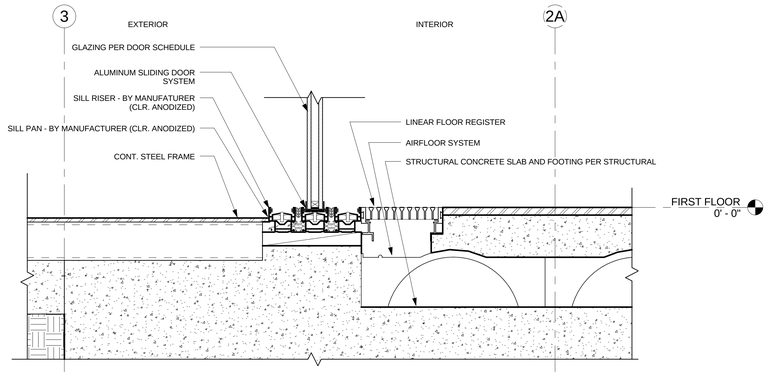

SLIDING DOOR SILL @ METAL FRAME 11

SCALE: 3" = 1'-0" | REF. SHEET: A2.01 | REF. DETAIL: 1

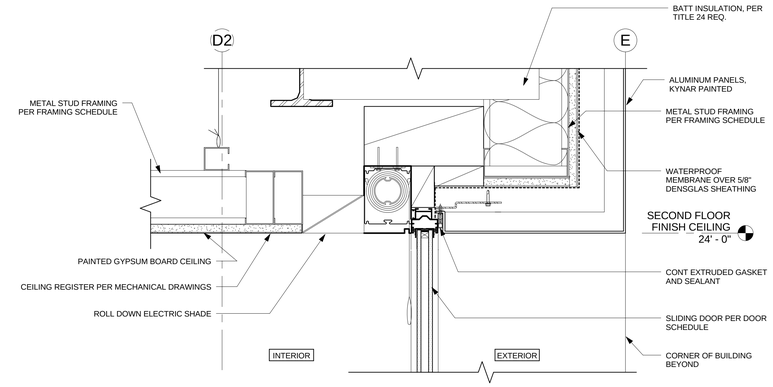

SLIDING DOOR HEAD AT CEILING 3

SCALE: 3" = 1'-0" | REF. SHEET: A6.01 | REF. DETAIL: 2

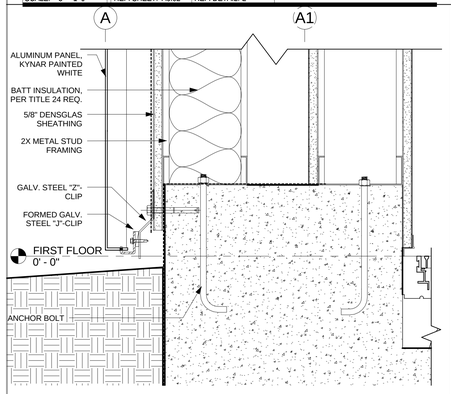

METAL PANEL AT GRADE (TYP.) 20

SCALE: 3" = 1'-0" | REF. SHEET: A6.04 | REF. DETAIL: 2

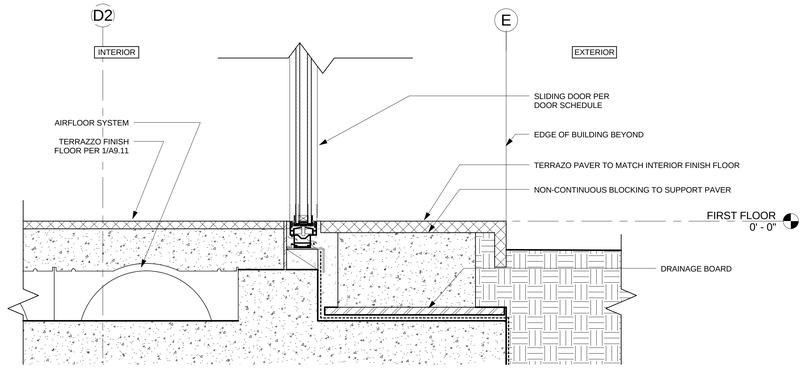

SLIDING DOOR SILL @ GROUND FLOOR 12

SCALE: 3" = 1'-0" | REF. SHEET: A6.01 | REF. DETAIL: 2

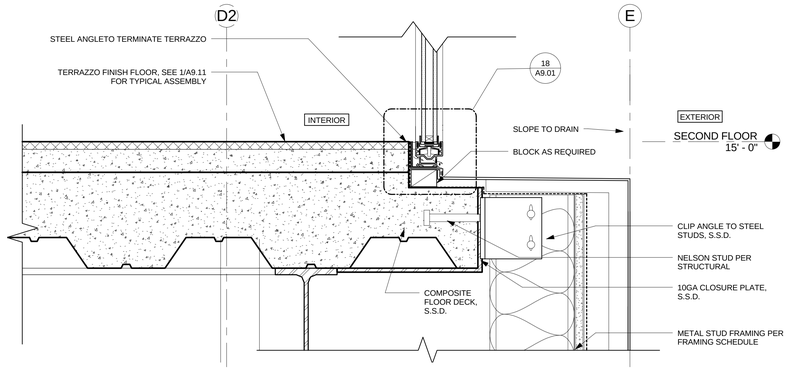

SLIDING DOOR SILL AT 2ND FLOOR DECK 4

SCALE: 3" = 1'-0" | REF. SHEET: A6.01 | REF. DETAIL: 2

STEVEN EHRLICH Architects

10865 WASHINGTON BLVD.
CULVER CITY, 90232.3600
TEL 310.838.9700
FAX 310.838.9737
WWW.S-EHRLICH.COM

PROJECT

Hoffman Castleman Residence

1445 El Bosque Ct, Pacific Palisades, CA

CONSULTANTS

NO.	DATE	REVISION

THIS DRAWING AND THE DESIGNS, ARRANGEMENTS, DEPICTIONS, IDEAS AND OTHER INFORMATION CONTAINED HEREIN CONSTITUTE UNPUBLISHED WORK OF STEVEN EHRLICH ARCHITECTS AND SHALL REMAIN PROPERTY OF STEVEN EHRLICH ARCHITECTS IN PERPETUITY. NO PART THEREOF SHALL BE REPRODUCED, COPIED, DISCLOSED, DISTRIBUTED, SOLD, PUBLISHED OR OTHERWISE USED IN ANYWAY WITHOUT THE ADVANCED EXPRESS WRITTEN CONSENT OF STEVEN EHRLICH ARCHITECTS. VISUAL CONTACT WITH THE ABOVE DRAWINGS, OR ANY PART THEREOF, SHALL CONSTITUE CONCLUSIVE EVIDENCE OF ACCEPTANCE OF THESE RESTRICTIONS.

SHEET TITLE

Exterior Details

DRAWN:	Author
SCALE:	As indicated
STATUS:	Back Check
DATE:	04-28-10
FILE:	S:\Nmarble\Hoffman\Hoffman Central Print.rvt
JOB:	491

SHEET NUMBER:

A9.01

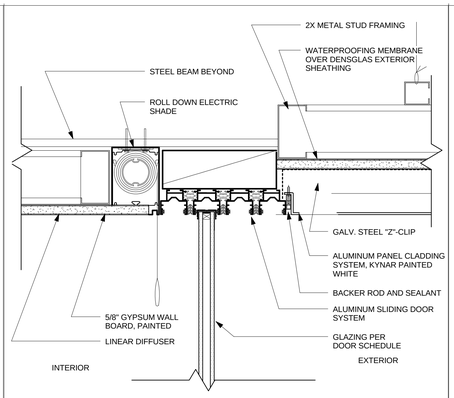

MASTER BEDROOM SLIDING DOOR HEAD 13

SCALE: 3" = 1'-0" | REF. SHEET: A6.02 | REF. DETAIL: 1

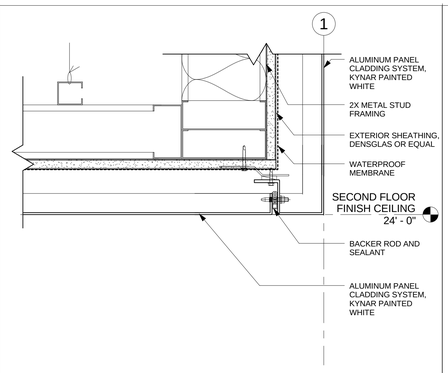

TYPICAL METAL PANEL SOFFIT 9

SCALE: 3" = 1'-0" | REF. SHEET: A6.02 | REF. DETAIL: 1

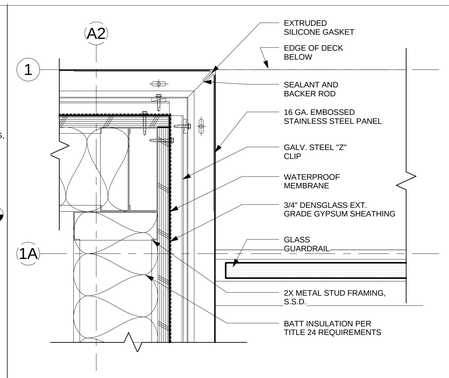

METAL PANEL CORNER @ 2ND FLOOR DECK 5

SCALE: 3" = 1'-0" | REF. SHEET: A2.02 | REF. DETAIL: 1

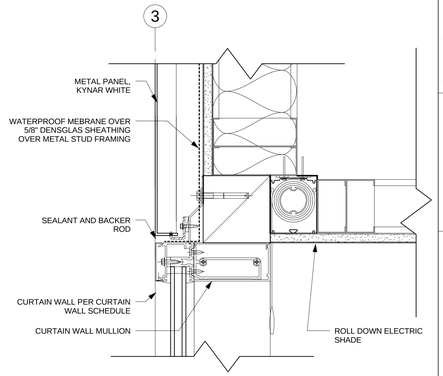

TYPICAL CURTAIN WALL HEAD 1

SCALE: 3" = 1'-0" | REF. SHEET: A6.04 | REF. DETAIL: 3

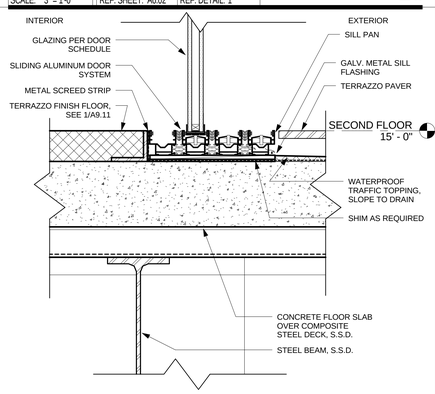

MASTER BEDROOM SLIDING DOOR SILL 14

SCALE: 3" = 1'-0" | REF. SHEET: A6.02 | REF. DETAIL: 1

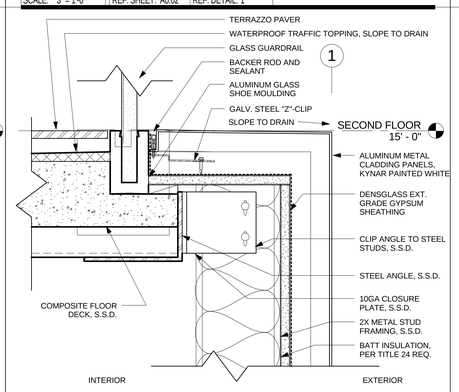

METAL PANEL AT SECOND FLOOR DECK 10

SCALE: 3" = 1'-0" | REF. SHEET: A6.02 | REF. DETAIL: 1

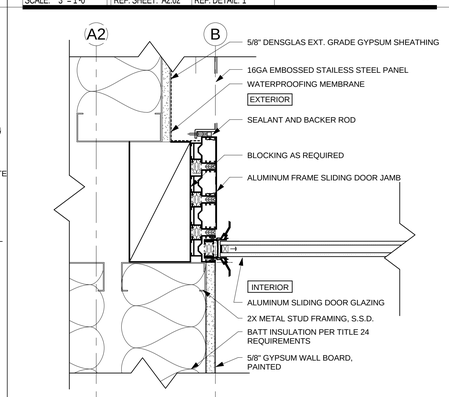

DOOR EX6 JAMB 6

SCALE: 3" = 1'-0" | REF. SHEET: A2.02 | REF. DETAIL: 1

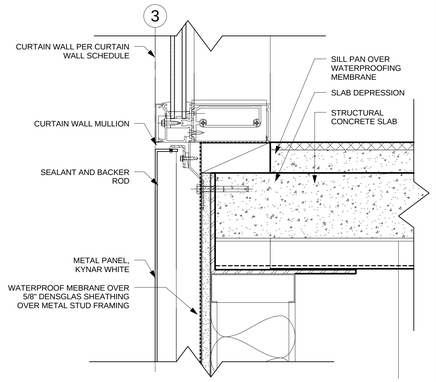

TYPICAL CURTAIN WALL SILL 2

SCALE: 3" = 1'-0" | REF. SHEET: A6.04 | REF. DETAIL: 3

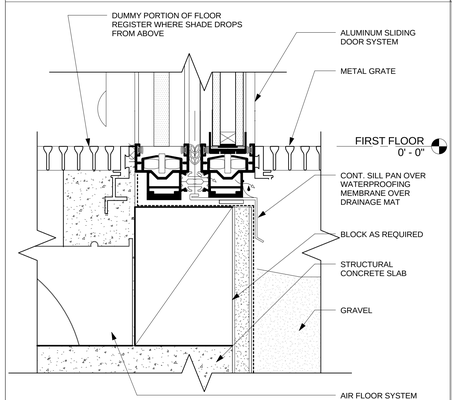

SLIDING DOOR SILL AT OUTDOOR PATIO 11

SCALE: 6" = 1'-0" | REF. SHEET: A9.02 | REF. DETAIL: 8

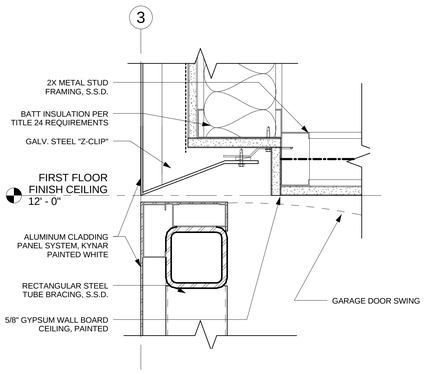

GARAGE DOOR HEAD 15

SCALE: 3" = 1'-0" | REF. SHEET: A6.03 | REF. DETAIL: 3

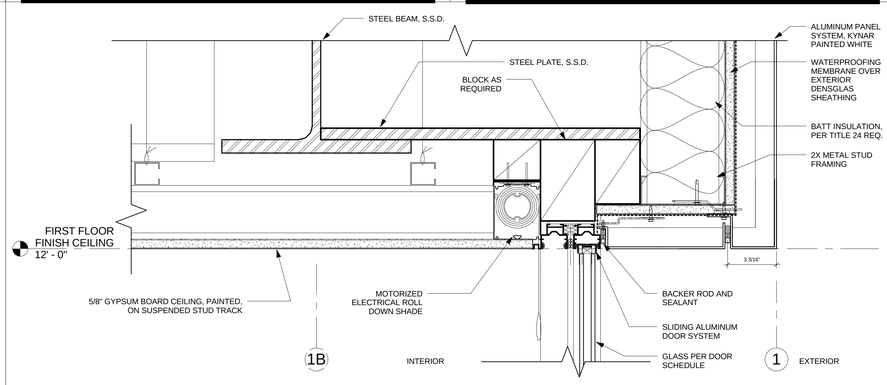

LIVING ROOM SLIDING DOOR HEAD 7

SCALE: 3" = 1'-0" | REF. SHEET: A6.02 | REF. DETAIL: 1

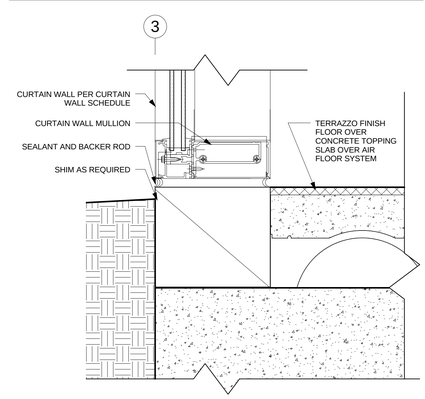

TYPICAL CURTAIN WALL SILL AT GRADE 3

SCALE: 3" = 1'-0" | REF. SHEET: A6.04 | REF. DETAIL: 3

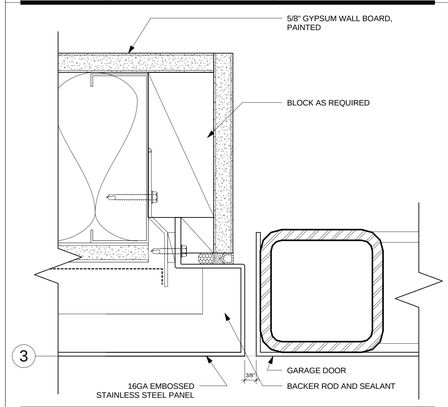

GARAGE DOOR JAMB 20

SCALE: 6" = 1'-0" | REF. SHEET: A2.01 | REF. DETAIL: 1

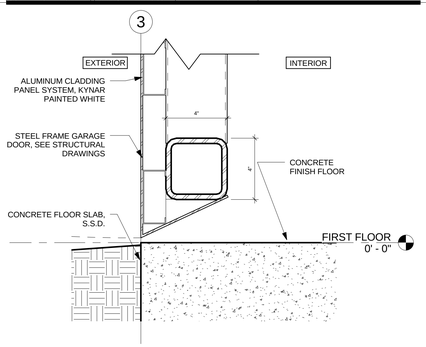

GARAGE DOOR SILL 16

SCALE: 3" = 1'-0" | REF. SHEET: A6.03 | REF. DETAIL: 3

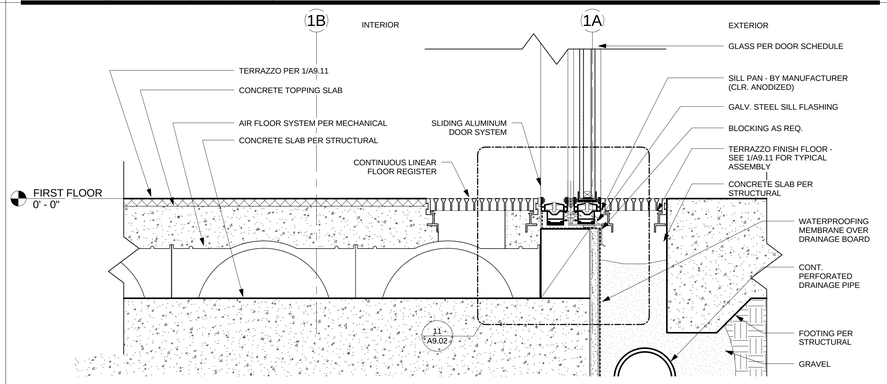

LIVING ROOM SLIDING DOOR SILL 8

SCALE: 3" = 1'-0" | REF. SHEET: A2.01 | REF. DETAIL: 1

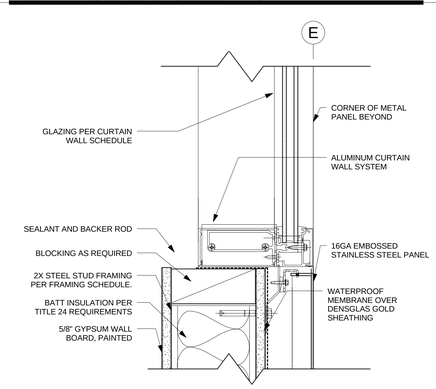

WINDOW CW2 SILL 4

SCALE: 3" = 1'-0" | REF. SHEET: A6.03 | REF. DETAIL: 2

STEVEN EHRLICH Architects

10865 WASHINGTON BLVD.
CULVER CITY, 90232.3600
TEL 310.838.9700
FAX 310.838.9737
WWW.S-EHRLICH.COM

PROJECT

Hoffman Castleman Residence

1445 El Bosque Ct, Pacific Palisades, CA

CONSULTANTS

NO.	DATE	REVISION

THIS DRAWING AND THE DESIGNS, ARRANGEMENTS, DEPICTIONS, IDEAS AND OTHER INFORMATION CONTAINED HEREIN CONSTITUTE UNPUBLISHED WORK OF STEVEN EHRLICH ARCHITECTS AND SHALL REMAIN PROPERTY OF STEVEN EHRLICH ARCHITECTS IN PERPETUITY. NO PART THEREOF SHALL BE REPRODUCED, COPIED, DISCLOSED, DISTRIBUTED, SOLD, PUBLISHED OR OTHERWISE USED IN ANYWAY WITHOUT THE ADVANCED EXPRESS WRITTEN CONSENT OF STEVEN EHRLICH ARCHITECTS. VISUAL CONTACT WITH THE ABOVE DRAWINGS, OR ANY PART THEREOF, SHALL CONSTITUE CONCLUSIVE EVIDENCE OF ACCEPTANCE OF THESE RESTRICTIONS.

SHEET TITLE

Exterior Details

DRAWN:	Author
SCALE:	As indicated
STATUS:	Back Check
DATE:	04-28-10
FILE:	S:\Nmarble\Hoffman\Hoffman Central Print.rvt
JOB:	491

SHEET NUMBER:

A9.02

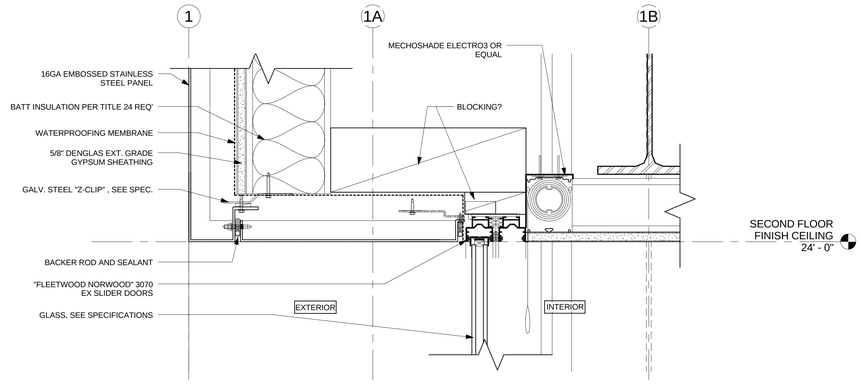

TYPICAL SECOND FLOOR SLIDING DOOR HEAD 13

SCALE: 3" = 1'-0" | REF. SHEET: A6.03 | REF. DETAIL: 1

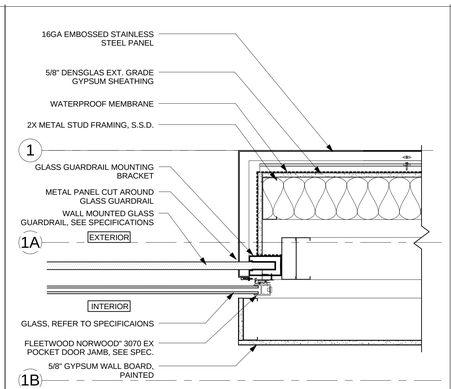

DOOR EX9 JAMB + POCKET 9

SCALE: 1 1/2" = 1'-0" | REF. SHEET: A2.02 | REF. DETAIL: 1

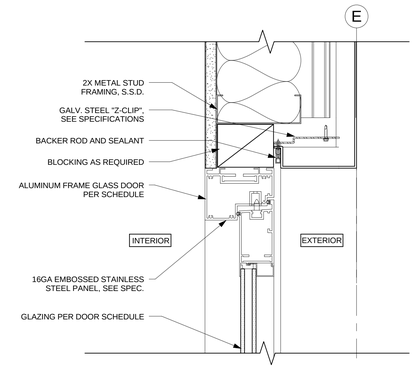

DOOR EX3 HEAD 5

SCALE: 3" = 1'-0" | REF. SHEET: A4.02 | REF. DETAIL: 2

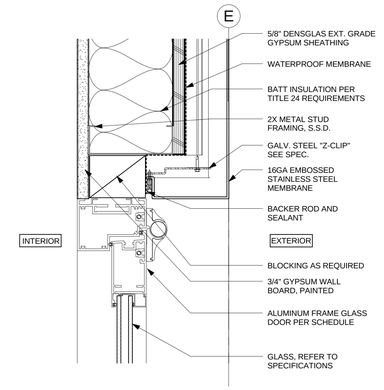

DOOR EX3 JAMB @ KITCHEN 1

SCALE: 3" = 1'-0" | REF. SHEET: A2.01 | REF. DETAIL: 1

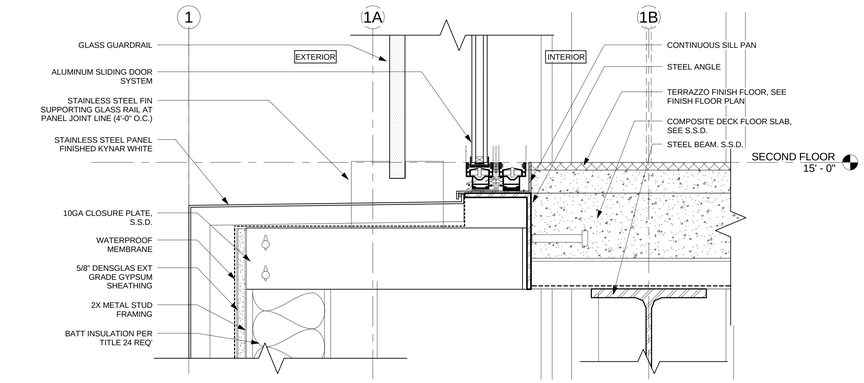

TYPICAL SECOND FLOOR SLIDING DOOR SILL 14

SCALE: 3" = 1'-0" | REF. SHEET: A6.03 | REF. DETAIL: 1

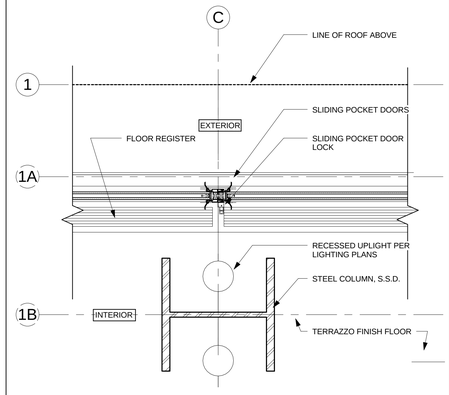

POCKET SLIDER STRIKE AT COLUMN 10

SCALE: 1 1/2" = 1'-0" | REF. SHEET: A2.01 | REF. DETAIL: 1

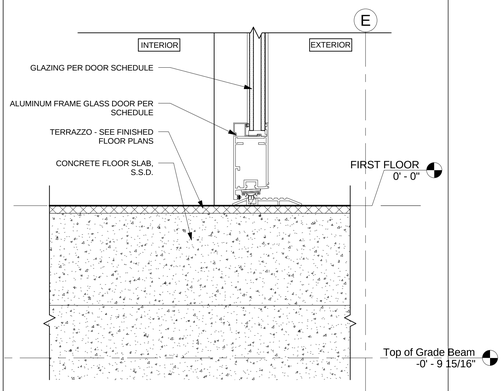

DOOR EX3 SILL 6

SCALE: 3" = 1'-0" | REF. SHEET: A4.02 | REF. DETAIL: 2

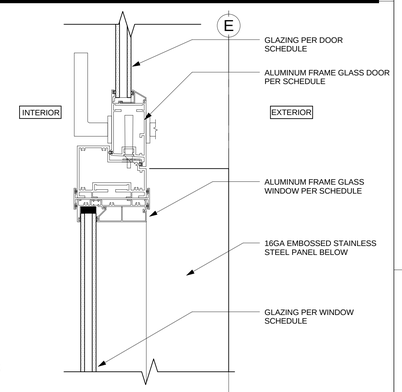

DOOR EX3 AND WINDOW CW3 JAMB @ KITCHEN 2

SCALE: 3" = 1'-0" | REF. SHEET: A2.01 | REF. DETAIL: 1

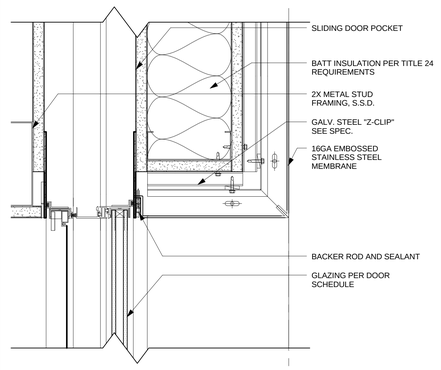

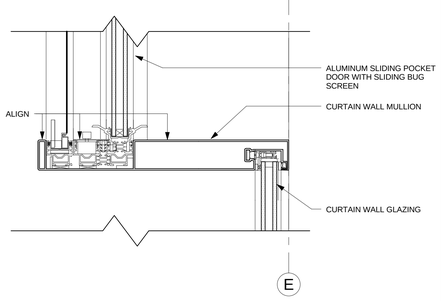

DOOR EX 25 JAMB 20

SCALE: 3" = 1'-0" | REF. SHEET: A2.02 | REF. DETAIL: 1

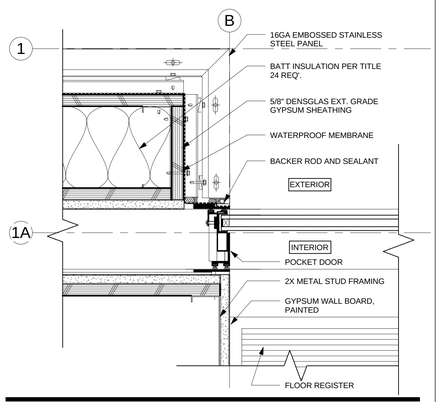

POCKET SLIDER DOOR JAMB @ METAL PANEL 15

SCALE: 3" = 1'-0" | REF. SHEET: A2.01 | REF. DETAIL: 1

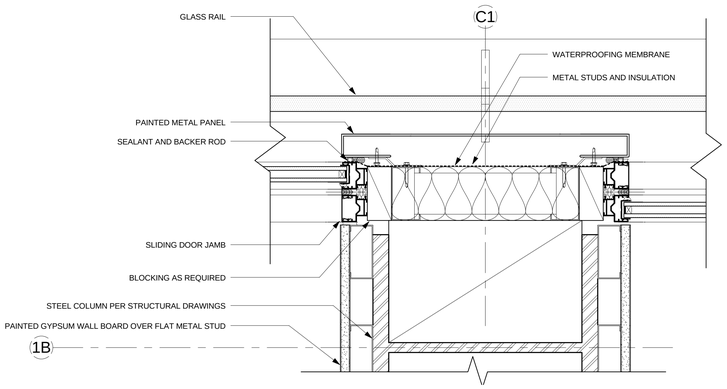

METAL PANEL AT SECOND FLOOR COLUMN 7

SCALE: 3" = 1'-0" | REF. SHEET: A5.11 | REF. DETAIL: 1

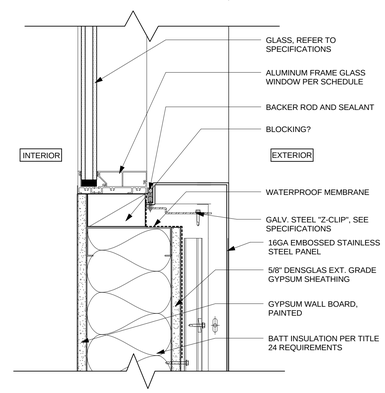

WINDOW CW3 JAMB @ KITCHEN 3

SCALE: 3" = 1'-0" | REF. SHEET: A2.01 | REF. DETAIL: 1

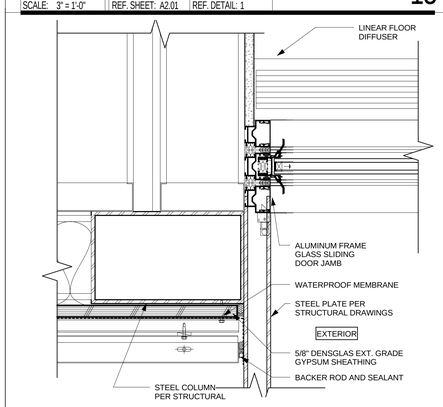

DOOR EX4 JAMB 16

SCALE: 3" = 1'-0" | REF. SHEET: A2.01 | REF. DETAIL: 1

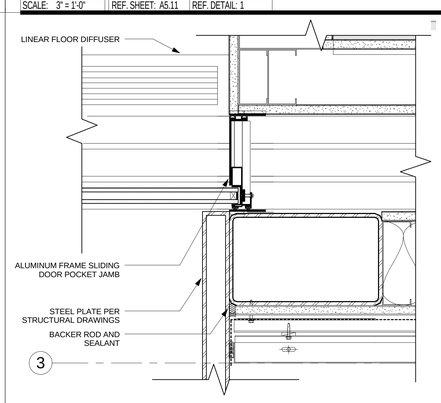

DOOR EX4 JAMB POCKET 12

SCALE: 3" = 1'-0" | REF. SHEET: A4.03 | REF. DETAIL: 2

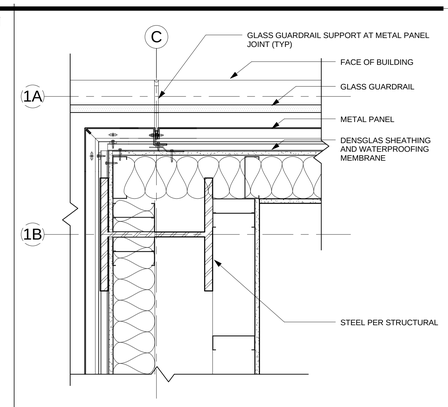

EXTERIOR METAL PANEL CORNER @ M. BATH 8

SCALE: 1 1/2" = 1'-0" | REF. SHEET: A5.11 | REF. DETAIL: 1

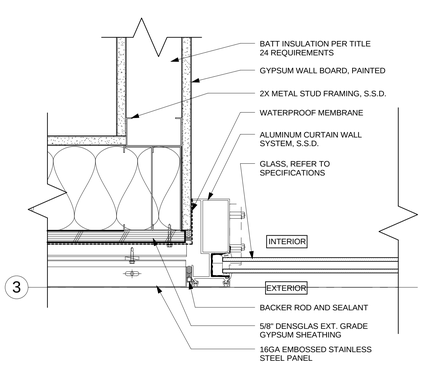

1ST FLOOR WALL @ CURTAIN WALL 4

SCALE: 3" = 1'-0" | REF. SHEET: A2.01 | REF. DETAIL: 1

STEVEN EHRLICH Architects

10865 WASHINGTON BLVD.
CULVER CITY, 90232.3600
TEL 310.838.9700
FAX 310.838.9737
WWW.S-EHRLICH.COM

PROJECT

Hoffman Castleman Residence

1445 El Bosque Ct, Pacific Palisades, CA

CONSULTANTS

NO.	DATE	REVISION

THIS DRAWING AND THE DESIGNS, ARRANGEMENTS, DEPICTIONS, IDEAS AND OTHER INFORMATION CONTAINED HEREIN CONSTITUTE UNPUBLISHED WORK OF STEVEN EHRLICH ARCHITECTS AND SHALL REMAIN PROPERTY OF STEVEN EHRLICH ARCHITECTS IN PERPETUITY. NO PART THEREOF SHALL BE REPRODUCED, COPIED, DISCLOSED, DISTRIBUTED, SOLD, PUBLISHED OR OTHERWISE USED IN ANYWAY WITHOUT THE ADVANCED EXPRESS WRITTEN CONSENT OF STEVEN EHRLICH ARCHITECTS. VISUAL CONTACT WITH THE ABOVE DRAWINGS, OR ANY PART THEREOF, SHALL CONSTITUE CONCLUSIVE EVIDENCE OF ACCEPTANCE OF THESE RESTRICTIONS.

SHEET TITLE

Exterior Details

DRAWN:	Author
SCALE:	As indicated
STATUS:	Back Check
DATE:	04-28-10
FILE:	S:\Nmarble\Hoffman\Hoffman Central Print.rvt
JOB:	491

SHEET NUMBER:

A9.03

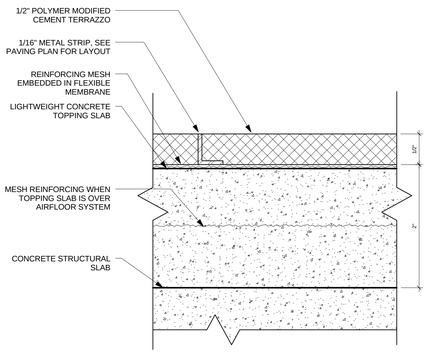

TYPICAL TERRAZZO SECTION (INT. OR EXT.) 17

SCALE: 1 : 1 | REF. SHEET: | REF. DETAIL:

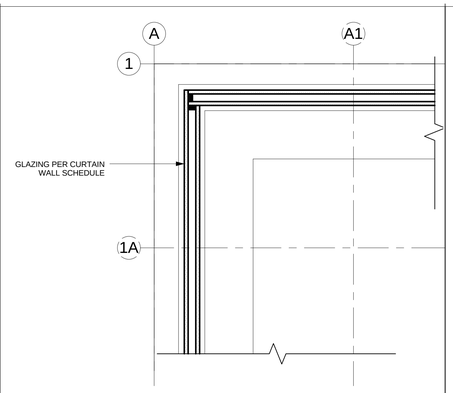

TYPICAL STOREFRONT GLASS CORNER 13

SCALE: 3" = 1'-0" | REF. SHEET: A2.01 | REF. DETAIL: 1

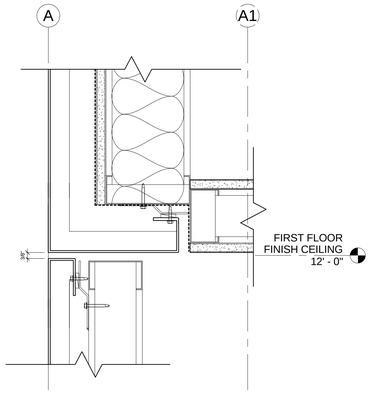

DOOR EX7 HEAD (JAMB SIMILAR) 9

SCALE: 3" = 1'-0" | REF. SHEET: A6.01 | REF. DETAIL: 1

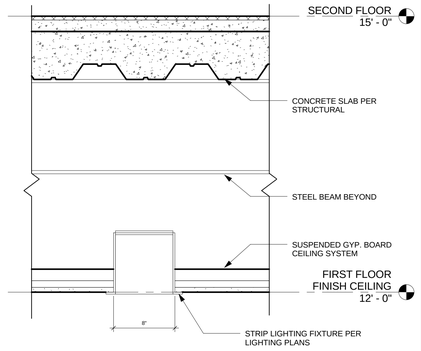

STRIP LIGHT AT FIRST FLOOR CEILING 18

SCALE: 1 1/2" = 1'-0" | REF. SHEET: A4.01 | REF. DETAIL: 2

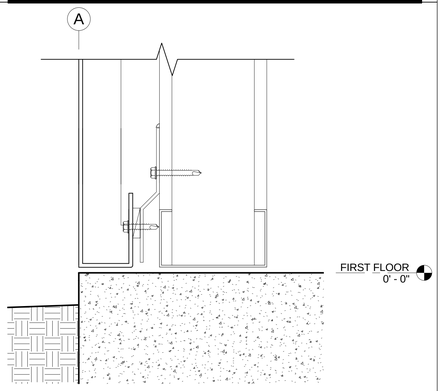

DOOR EX7 SILL 10

SCALE: 6" = 1'-0" | REF. SHEET: A6.01 | REF. DETAIL: 1

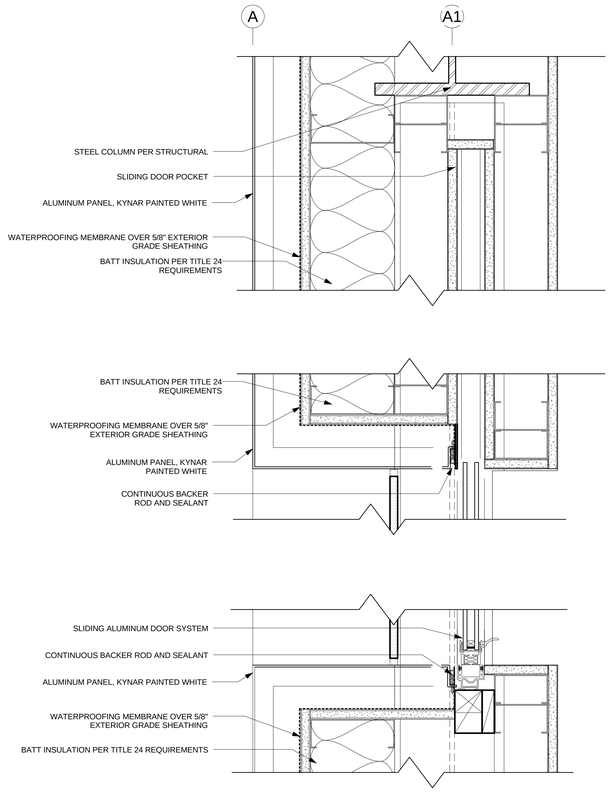

TYPICAL SLIDING WINDOW PLAN 2

SCALE: 3" = 1'-0" | REF. SHEET: A2.02 | REF. DETAIL: 1

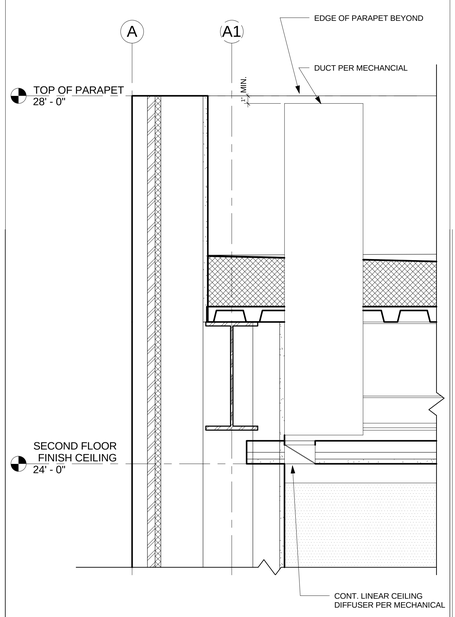

ROOF ASSEMBLY AT PARAPET 20

SCALE: 1 1/2" = 1'-0" | REF. SHEET: A6.05 | REF. DETAIL: 4

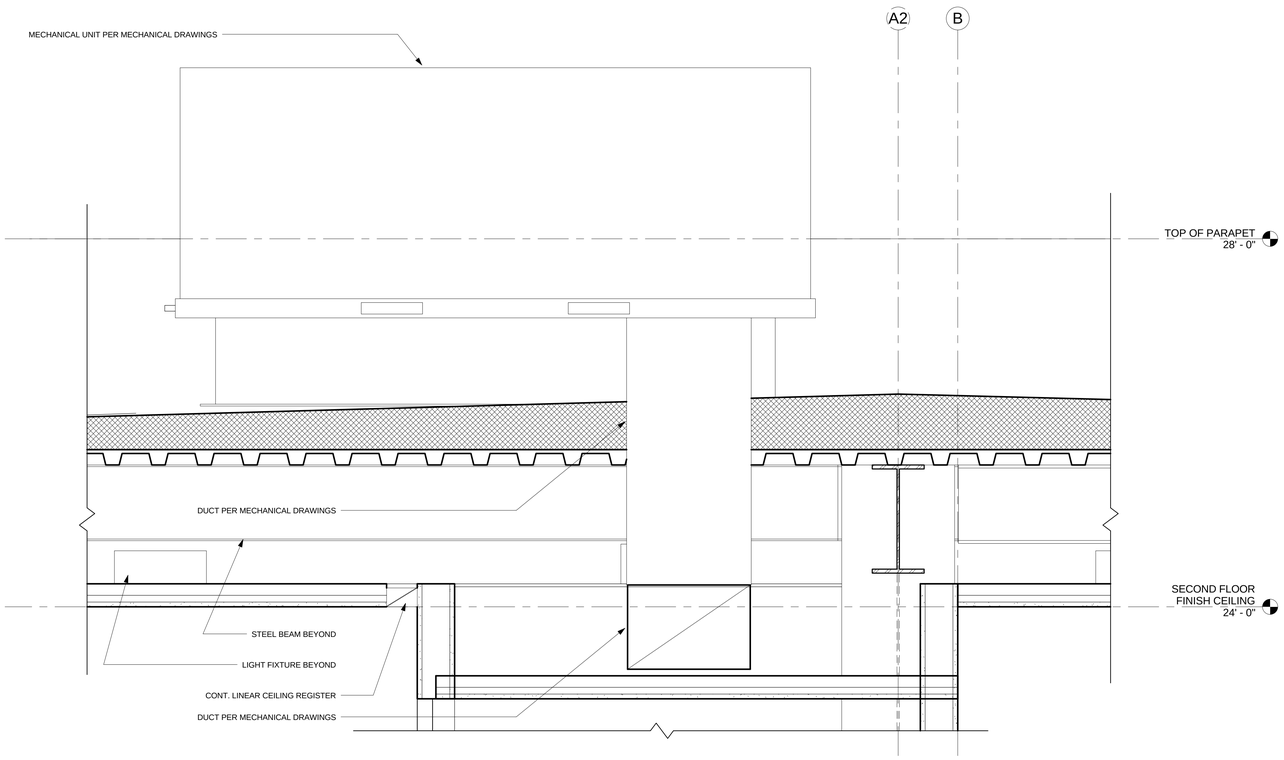

ROOF ASSEMBLY AT MECHANICAL UNIT 8

SCALE: 1 1/2" = 1'-0" | REF. SHEET: A4.01 | REF. DETAIL: 2

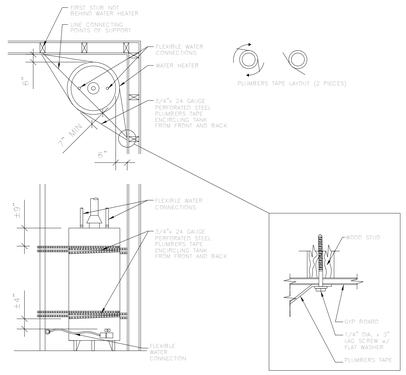

WATER HEATER STRAPPING DETAIL 3

SCALE: 1/4" = 1'-0" | REF. SHEET: | REF. DETAIL:

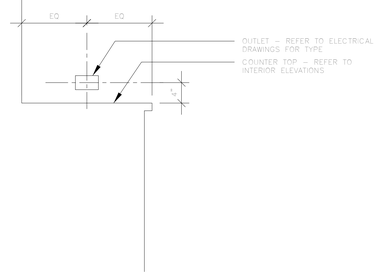

OUTLET AT COUNTER TOP 4

SCALE: 1" = 1'-0" | REF. SHEET: | REF. DETAIL:

STEVEN EHRLICH Architects

10865 WASHINGTON BLVD.
CULVER CITY, 90232.3600
TEL 310.838.9700
FAX 310.838.9737
WWW.S-EHRLICH.COM

PROJECT

Hoffman Castleman Residence

1445 El Bosque Ct, Pacific Palisades, CA

CONSULTANTS

NO.	DATE	REVISION

THIS DRAWING AND THE DESIGNS, ARRANGEMENTS, DEPICTIONS, IDEAS AND OTHER INFORMATION CONTAINED HEREIN CONSTITUTE UNPUBLISHED WORK OF STEVEN EHRLICH ARCHITECTS AND SHALL REMAIN PROPERTY OF STEVEN EHRLICH ARCHITECTS IN PERPETUITY. NO PART THEREOF SHALL BE REPRODUCED, COPIED, DISCLOSED, DISTRIBUTED, SOLD, PUBLISHED OR OTHERWISE USED IN ANYWAY WITHOUT THE ADVANCED EXPRESS WRITTEN CONSENT OF STEVEN EHRLICH ARCHITECTS. VISUAL CONTACT WITH THE ABOVE DRAWINGS, OR ANY PART THEREOF, SHALL CONSTITUE CONCLUSIVE EVIDENCE OF ACCEPTANCE OF THESE RESTRICTIONS.

SHEET TITLE

Exterior Details

DRAWN:	Author
SCALE:	As indicated
STATUS:	Back Check
DATE:	04-28-10
FILE:	S:\Nmarble\Hoffman\Hoffman Central Print.rvt
JOB:	491

SHEET NUMBER:

A9.04

THE ABOVE DRAWINGS, SPECIFICATIONS, AND DESIGNS ARE THE SOLE PROPERTY OF C. W. HOWE PARTNERS INC. NO PART THEREOF SHALL BE COPIED OR USED WITH ANY OTHER WORK OTHER THAN THE SPECIFIC PROJECT FOR WHICH THEY HAVE BEEN DEVELOPED, NOR SHALL THEY BE ASSIGNED TO ANY THIRD PARTY WITHOUT THE CONSENT OF C. W. HOWE PARTNERS INC.

LIGHT GAUGE STEEL STUDS (CONTINUED)

6) ALL JOISTS AND STUDS SHALL BE BRACED TO THE FLOOR ABOVE AT 48" O.C. (MAXIMUM) AS PER THE MANUFACTURER'S SPECIFICATIONS AND REQUIREMENTS. SEE TYPICAL BRACING DETAILS.

7) CEILING, ROOF, AND SOFFIT JOISTS SHALL HAVE A MINIMUM OF 10" OF UN-PUNCHED STEEL AT AL END SUPPORTS

D. SCREW CONNECTIONS

1) SCREWS SHALL HAVE A TENSILE YIELD STRENGTH (Fy) OF 33 KSI AND AN ULTIMATE STRENGTH (Fu) OF 45 KSI.

2) THE FOLLOWING SCREW DIAMETERS CORRESPOND TO SCREW DESIGNATIONS
NO. 12 = 0.216"
NO. 10 = 0.190"
NO. 8 = 0.164"
NO 6 = 0.138"

3) PENETRATION OF SCREWS THROUGH JOINED MATERAILS SHALL NOT BE LESS THEN 3 EXPOSED THREADS.

4) SCREWS SHALL BE INSTALLED AND TIGHTENED PER MANUFACTURER'S RECOMMENDATIONS.

STEEL STUDS

1. THE STUDS AND WELDING EQUIPMENT OF EACH MANUFACTURER SHALL BE APPROVED BY THE DEPARTMENT. INTERCHANGING OF STUDS AND EQUIPMENT OF DIFFERENT MANUFACTURERS IS NOT PERMITTED EXCEPT WHERE SPECIFICALLY APPROVED FOR EACH JOB.

2. INSTALLATION, INSPECTION AND QUALIFICATION OF WELD BASE SHALL COMPLY WITH APPLICABLE SECTIONS OF THE AWS CODE OF WELDING IN BUILDING CONSTRUCTION, EXCEPT AS OTHERWISE SPECIFIED HEREIN.

3. THE WELDING OF STUDS SHALL BE DONE IN THE SHOP OF A FABRICATOR APPROVED BY THE DEPARTMENT, OR SHALL BE DONE UNDER CONTINUOUS INSPECTION BY A REGISTERED DEPUTY BUILDING INSPECTOR CERTIFIED FOR STRUCTURAL STEEL.

4. THE FIRST TWO STUDS, AT THE START OF EACH PRODUCTION PERIOD (THE INTERVAL BETWEEN START-UP AND ANY SHUTDOWN OF EQUIPMENT) AND AT THE START OF EACH NEW WELDING PROCEDURE, SHALL BE TESTED BY STRIKING THE STUD WITH A HAMMER AND BENDING IT TO AN ANGLE TO 45 DEGREES, IF FAILURE OCCURS IN THE WELD, THE PROCEDURE SHALL BE CORRECTED AND THE NEXT TWO STUDS SHALL BE WELDED AND TESTED PRIOR TO THE WELDING OF ANY ADDITIONAL STUDS. THE BENT STUDS NEED NOT BE REMOVED BUT AN ADDITIONAL VERTICAL STUD SHALL BE SUBSTITUTED FOR EACH OF THE 45 DEGREE BENT STUDS. THE CITY INSPECTOR SHALL BE IMMEDIATELY INFORMED OF ANY CHANGES IN THE WELDING PROCEDURE AT THE TIME DURING CONSTRUCTION AND HE/SHE SHALL BE HAVE THE AUTHORITY TO SELECT ADDITIONAL STUDS OF BE TESTED.

5. IN ADDITION TO THE TESTS REQUIRED IN PARAGRAPH 4 ABOVE, AT LEAST ONE STUD ON EACH MEMBER, AFTER BEING ALLOWED TO COOL, SHALL BE TESTED BY STRIKING THE STUD WITH HAMMER AND BENDING IT TO AN ANGLE OF 15 DEGREES. IF FAILURE OCCURS, THE PROCEDURE IN PARAGRAPH 4 ABOVE SHALL BE FOLLOWED.

6. STUDS MAY BE WELDED DIRECTLY THROUGH FORMED METAL DECK WHETHER UNCOATED, PAINTED OR GALVANIZED, PROVIDED THAT:

   A. THE STUDS AND EQUIPMENT ARE APPROVED BY THE DEPARTMENT FOR WELDING THROUGH DECKS; AND

   B. TEST DATA FROM A TESTING AGENCY APPROVED BY THE DEPARTMENT OF FROM THE MILL SHALL BE SUBMITTED FOR EACH JOB SPECIFYING THE THICKNESS OF GALVANIZING, IF ANY, ON THE DECK. THE GALVANIZING SHALL NOT EXCEED THAT APPROVED FOR THE SPECIFIC TYPE OF STUD INSTALLATION; AND

   C. IN PLACE OF THE TESTS REQUIRED IN PARAGRAPH 5 ABOVE, EACH WELDED STUD SHALL BE TESTED BY STRIKING THE STUD ONCE WITH A SIX POUND HAMMER. THE FORCE OF THE HAMMER SHALL BE SUFFICIENT TO INDICATE WHETHER OR NOT QUALITY WELDING HAS BEEN OBTAINED.

7. BENT STUDS THAT DO NOT SHOW ANY SIGN OF FAILURE SHALL BE ACCEPTED AS SHEAR CONNECTORS, PROVIDED THE CONNECTOR WILL HAVE AT LEAST ONE INCH OF LATERAL CONCRETE COVER EXCEPT FOR THAT PORTION OF THE CONNECTOR LOCATED WITHIN THE RIBS FO THE STEEL DECK, AND PROVIDED FURTHER THE BEND IS NO GREATER THAN 15 DEGREES. IN ADDITION, BENT SHEAR CONNECTORS USED WITH METAL DECKING SHALL EXTEND ONE AND ONE-HALF INCHES MINIMUM, MEASURED AT THE CENTERLINE OF THE STUD, ABOVE THE TOP OF THE RIBS TO BE ACCEPTABLE AS A CONNECTOR IN THE BENT POSITION.

8. WELDED WIRE MESH OF 6x6 - W1.4xW1.4 OR EQUIVALENT SHALL BE PROVIDED AS MINIMUM TRANSVERSE REINFORCEMENT OVER COMPOSITE BEAMS. THE REINFORCEMENT SHALL BE PLACED WITHIN ONE INCH OFTHE TOP OF THE CONCRETE SLAB. IF ANY UNUSUALLY LARGE SLAB FORCE IS ANTICIPATED, ATTENTION SHOULD BE GIVEN TO THE TRANSVERSE REINFORCEMENT SO THAT LONGITUTIONAL SHEAR IN THE SLAB IS NOT CRITICAL. (TEMPERATURE REINFORCEMENT REQUIREMENT MAY GOVERN.)

COMPOSITE STEEL DECKING (CONTINUED)

10) MINIMUN WELDS AT BEAM SUPPORTS ARE TO BE 1/2" DIAMETER PUDDLE WELDS AT 12" ON CENTER. MINIMUM WELDS AT SEAMS TO BE BUTTON PUNCH AT 12" ON CENTER OR TOP SEAM WELD AT 36" ON CENTER AS PER MANUFACTURER DETAILS.

11) WELDING OF STEEL DECKING SHALL BE IN ACCORDANCE WITH THE LATEST 'AWS' SPECIFICATIONS FOR WELDING SHEET STEEL IN STRUCTURES AND AS SHOWN ON THE STRUCTURAL AND SHOP DRAWINGS.

12) WELD METAL SHALL PENETRATE ALL LAYERS OF DECK MATERIAL AT EACH END AND SIDE JOINTS AND HAVE GOOD FUSION TO THE SUPPORTING MEMBERS.

SECTION C: PLACING DECK

13) FLOOR DECK SHALL BE CUT TO FIT AROUND COLUMNS AND BRACING SHOWN ON THE STRUCTURAL DRAWINGS. PROVIDE NEAT, SQUARE AND TRIM CUTS.

14) SUPPLY AND FASTEN IN PLACE ALL CLOSURES AT PERIMETER ENDS OF CELLS OR WHERE CELLS CHANGE DIRECTION AS SHOWN ON THE DECK ERECTION DRAWINGS.

15) THE FLOOR DECK SUPPLIER WILL SUPPLY THOSE FRAMED FLOOR OPENINGS WHICH ARE SHOWN ON THE STRUCTURAL DRAWINGS. SMALLER OPENINGS SHALL BE FIELD CUT BY THE TRADE REQUIRING THE OPENING. THE STRUCTURAL ENGINEER SHALL BE CONSULTED BEFORE ANY HOLE IS CUT.

16) REINFORCEMENT, IF REQUIRED, AT ALL OPENINGS SHALL BE SUPPLIED BY THE GENERAL CONTRACTOR AND PLACED WHERE INDICATED ON THE PLANS.

17) STEEL DECKING SHEETS SHALL BE CONTINUOUS OVER A MINIMUM OF THREE (3) SUPPORTS (2 SPANS).

18) STEEL DECKING SHALL BE PLACED ON THE SUPPORTING FRAMEWORK WITH A MINIMUM END LAP OF TWO INCHES (2"), CENTERED OVER THE SUPPORTS.

19) THE STEEL DECK SHALL BE ERECTED AND FASTENED IN ACCORDANCE WITH THE MANUFACTURER'S SPECIFICATIONS AND ERECTION LAYOUT, IN ADDITION TO ALL REQUIREMENTS SET FORTH IN THE STRUCTURAL WORKING DRAWINGS AND SHOP DRAWINGS.

SECTION D: CONCRETE AND REINFORCEMENT

20) THE TOPPING CONCRETE USED IN THE COMPOSITE FLOOR DECKS SHALL BE LIGHTWEIGHT CONCRETE HAVING AN ULTIMATE STRENGTH OF 3500 PSI AT 28 DAYS AND A MAXIMUM WET DENSITY OF 110 PCF. THE TOPPING SHALL BE PLACED TO A TOTAL SLAB DEPTH PER PLANS.

21) THE TOPPING IN THE FLOOR AND ROOF DECKS SHALL BE REINFORCED IN ACCORDANCE WITH THE STEEL DECK RECOMMENDATIONS AND THE STRUCTURAL PLANS AND DETAILS. THE FLOOR DECKS SHALL HAVE MINIMUM OF 6X6/10-10 WELDED WIRE FABRIC AT 1" BELOW TOP OF SLAB TO PREVENT TEMPERATURE CRACKING.

22) CONTINUOUS INSPECTION BY CITY OF LOS ANGELES REGISTERED DEPUTY BUILDING INSPECTORS FOR CONCRETE SHALL BE PROVIDED DURING THE MIXING AND PLACING OF THE CONCRETE FOR THE SLAB.

23) ADMIXTURES CONTAINING CALCIUM CHLORIDE OR OTHER CORROSIVE MATERIALS SHALL NOT BE USED IN THE CONCRETE FOR THE SLAB.

24) PRIOR TO PLACEMENT OF THE CONCRETE FOR THE SLAB, THE STEEL DECK UNITS SHALL BE CLEANED OF OIL, GREASE AND OTHER MATERIALS WHICH MAY ADVERSELY AFFECT THE BONDING OF THE CONCRETE TO THE DECK.

SECTION E: COMPOSITE STEEL DECKING NOTES

1) DECKING IS VERCO W3 FORMLOCK.
2) THICKNESS IS 19 GUAGE.
3) TOTAL SLAB DEPTH IS 6-1/2" FOR FLOOR, 5-1/2" FOR DECK
4) LIGHTWEIGHT CONCRETE (110 PCF).
5) DECK SPAN NOT TO EXCEED 8'-0".

LIGHT GAUGE STEEL STUDS (LARR# 25529)

A. MATERIALS:

1) SCREW ON DRYWALL STUDS: IN ACCORDANCE WITH ASTM A645. PRESSED STEEL NON-LOAD BEARING TYPE, PUNCHED, MINIMUM GAGE, BY ANGELES METAL, INRYCO, USG, CEMCO, WESTERN METAL LATH, OR EQUAL, WITH FLOOR AND CEILING TRACKS ONE GAGE HEAVIERTHAN THE STUDS, AND SHOES. STUDS AND TRACKS SHALL HAVE MANUFACTURER'S STANDARD RUST-INHIBITIVE PAINT FINISH EXCEPT FURNISH HOT-DIP GALVANIZED STUDS WITH MATCHING TRACKS WHERE INDICATED OR SPECIFIED. IN ADDITION TO THE FOLLOWING REQUIREMENTS:

2) STANDARD DRYWALL STUDS: OF 20 GAGE INTERIOR, AND 16 GUAGE EXTERIOR ELECTROGALVANIZED STEEL HAVING PUNCHED UTILITY OPENINGS AND KNURLED FLANGES AT LEAST 1-5/8" WIDE, WITH .563" FLANGE RETURNS.

3) STUD HEIGHT: GAGES SPECIFIED ABOVE ARE MINIMUM WHEN 10'-6" FLOOR TO FLOOR HEIGHT IS SPECIFIED. WHERE REQUIRED STUD HEIGHT EXCEEDS CODE APPROVALS, PROVIDE HEAVIER GAGE STUDS AND/OR DECREASE STUD SPACING AS NECESSARY TO CONFORM TO CODE APPROVALS, AT NO EXTRA COST TO OWNER. ALL STUDS MUST CONFORM TO U.B.C. REQUIREMENTS FOR LATERAL LOAD RESISTANCE AND DEFLECTION CRITERIA. SEE TYPICAL STUD SCHEDULE FOR SIZES AND SPACINGS BASED ON HEIGHTS.

4) STUD ACCESSORIES: PROVIDE ALL STANDARD RELATED ACCESSORIES INCLUDING FLOOR AND CEILING TRACKS, LATERAL BRACING, CLIPS, FASTENERS, AND THE LIKE, OF THE SAME MANUFACTURER AS EACH TYPE OF STUD SPECIFIED, AS REQUIRED FOR COMPLETE INSTALLATIONS.

5) SCREW-ON DRYWALL FURRING CHANNELS: ASTM A645, MINIMUM 0.022" THICK ZINC COATED STEEL, MINIMUM 1-3/4" FACE, 2-3/4" BASE SPAN, AND 7/8" FURRING DEPTH.

6) WIRES: SOFT-ANNEALED GALVANIZED STEEL WIRE, 8 GAGE FOR HANGER WIRES AND 16 GAGE FOR FRAMING UNLESS OTHERWISE SPECIFIED.

7) SOUND INSULATING TAPE SEALS: " BEAR TAPE " BY NORTON INDUSTRIES, OR EQUAL.

8) ACOUSTICAL SEALANT: BY USG, GOLD BOND, OR EQUAL, PERMANENTLY RESILIENT TYPE.

B. EXECUTION

1) INSTALLATION OF STUD TRACKS: BOLT OR SCREW TO METAL AND ANCHOR AT LEAST 1-1/4" INTO CONCRETE OR WOOD FLOOR BELOW, WITH BOLTS AND EXPANSION SHIELDS, SLEEVED "DRYVINS" CINCH ANCHORS, SCREWS AND LEAD PLUGS, DRILLED AND BOLTED STEEL SHELLS, POWDER-DRIVEN FASTENERS, OR OTHER APPROVED DEVICES WHERE WALLS RUNNERS ARE LESS THAN 16" FROM THE EDGE OF THE DECK. SECURE ALL TRACKS WITHIN 6" OF ENDS AND AT MAXIMUM 24" CENTERS BETWEEN UNLESS OTHERWISE INDICATED. SEE TYPICAL DETAILS.

2) ANY WELDING SHALL COMPLY WITH CURRENT 'AWS' PRACTICE. ALL WELDS SHALL BE TOUCHED-UP WITH ZINC "RICH" PAINT.

3) ALL FRAMING COMPONENTS SHALL BE CUT SQUARELY FOR ATTACHMENT TO PERPENDICULAR MEMBERS, OR AS REQUIRED FOR AN ANGULAR FIT AGAINST ABUTTING MEMBERS.

4) ALL COMPONENTS SHALL BE SECURELY FASTENED TOGETHER.

   A. FASTENING SHALL BE WITH SELF-DRILLING SCREWS AND WELDS.
   B. SCREW AND WELD SIZE, TYPE, LOCATION, AND SPACING SHALL BE AS PER THE MANUFACTURER'S SPECIFICATIONS AND REQUIREMENTS EXCEPT WHERE SPECIFICALLY NOTED OTHERWISE.
   C. WIRE TYPING OF COMPONENTS SHALL NOT BE PERMITTED.

5) STUDS SHALL BE PLUMBED, ALIGNED, AND SECURELY ATTACHED TO THE FLANGES OF BOTH UPPER AND LOWER RUNNERS.

6) SPLICES IN STUDS SHALL NOT BE PERMITTED.

7) ALL COMPONENTS SHALL BE HELD FIRMLY IN POSITION UNTIL PROPERLY FASTENED.

C. WALL FRAMING AND FURRING FOR GYPSUM DRYWALL

1) SCREW-ON DRYWALL STUDS: PROVIDE GAGE STUDS AS INDICATED ABOVE AT MAXIMUM 16" CENTERS EXCEPT AS OTHERWISE SHOWN. CUT STUDS 1/2" SHORT AND SECURE TO TOP TRACK IN A MANNER THAT ALLOWS FOR DEFLECTION OF STRUCTURE ABOVE. PROVIDE FULL HEIGHT DOUBLED STUDS AT JAMBS OF SCREWED OR BOLTED TO JAMB STUDS, UNLESS OTHERWISE SHOWN. INSTALL 16 GAGE STUDS AT WALL HUNG LAVATORIES, URINALS, GRAB BARS, WALL-HUNG EQUIPMENT, AND ELSEWHERE SHOWN.

2) DRYWALL FASTENING: DRYWALL SHALL BE SCREWED TO STUDS WITH STANDARD DRYWALL SCREWS OF 1" MINIMUM LENGTH. THE SPACING OF FASTENERS SHALL BE 7" O.C. AT ALL PANEL EDGES AND INTERMEDIATE FRAMING MEMBERS.

3) WALL BRIDGING: PROVIDE 3/4" CHANNEL BRIDGING OR THE STUD MANUFACTURE'S STANDARD BRIDGING AT MAXIMUM 60" VERTICAL INTERVALS IN WALLS. AT HEADS OF ALL DOORS, AND HEADS AND SILLS OF WALL OPENINGS, PROVIDE 1-1/2" CHANNEL BRIDGING EXTENDING TO THE SECOND STUD BEYOND EACH SIDE OF JAMBS.

4) JOISTS SHALL BE LOCATED DIRECTLY OVER BEARING STUDS.

5) PROVIDE JOIST BRIDGING AS PER THE MANUFACTURER'S SPECIFICATIONS AND REQUIREMENTS.

CONCRETE (CONTINUED)

24) FOR WALLS, STRUCTURAL DECKS AND COLUMNS CONCRETE STRENGTH SHALL BE VERIFIED BY STANDARD CYLINDER TESTS (IN ACCORDANCE WITH 2007 C.B.C. 1905.6 MADE BY AN APPROVED TESTING LABORATORY. THE CONTRACTOR SHALL MAINTAIN COPIES OF THE TEST REPORTS AT THE JOB SITE AND AVAILABLE FOR REVIEW AND INSPECTION BY THE BUILDING OFFICIALS. MAKE 3 TEST CYLINDERS FOR EACH DAY'S POUR. TEST EACH BATCH OF CYLINDERS AS FOLLOWS: 1 AT 7 DAYS, AND 2 AT 28 DAYS.

25) SEE ARCHITECTURAL PLANS FOR LOCATIONS OF ALL DIMENSIONS, SLAB DEPRESSIONS, SLOPES, CURBS, AND CONTROL JOINTS.

26) ALL "DRYPACK" CALLED FOR UNDER BASEPLATES SHALL BE PRE-MIX SPEC CONCRETE -5000 PSI GROUT (LARR# 24968). THIS IS A DRY FACTORY-BLENDED CONCRETE MIX CONSISTING OF TYPE II PORTLAND CEMENT, SAND AND 3/8" AGGREGATE. THIS DRYPACK SHALL BE PLACED UNDER CONTINUOUS DEPUTY INSPECTION.

REINFORCING STEEL

1) ALL REINFORCING STEEL SHALL BE DEFORMED INTERMEDIATE GRADE BARS CONFORMING TO A.S.T.M. A-615, GRADE 40 FOR #4 AND SMALLER BARS, GRADE 60 FOR LARGER BARS.

2) REINFORCING STEEL SHALL NOT BE WELDED, UNLESS SPECIFICALLY NOTED OTHERWISE. WELDING OF REINFORCING STEEL (WHERE SPECIFICALLY NOTED OR DETAILED) SHALL CONFORM TO ACI 318-05.

3) TO HOLD REINFORCING BARS IN THEIR TRUE POSITION AND PREVENT DISPLACEMENT, STANDARD TIE AND ANCHORAGE DEVICES MUST BE PROVIDED.

4) SHOP DRAWINGS FOR FABRICATION OF ANY REINFORCING STEEL SHALL BE APPROVED BY THE CONTRACTOR AND SUBMITTED TO THE ARCHITECT AND THE ENGINEER, FOR THEIR REVIEW, PRIOR TO FABRICATION.

5) STAGGER SPLICES IN REINFORCING STEEL UNLESS SPECIFICALLY NOTED OTHERWISE.

6) ALL REINFORCING BAR BENDS SHALL BE MADE COLD.

7) FABRICATION, ERECTION, AND PLACEMENT OF REINFORCING STEEL SHALL CONFORM TO CONCRETE REINFORCING STEEL INSTITUTE (C.R.S.I.) MANUAL OF STANDARD PRACTICE.

8) MINIMUM LAP SPLICE FOR ALL REINFORCING BARS AT SPLICES SHALL BE 40 BAR DIAMETERS. ALL SPLICES ARE TO BE STAGGERED. PERPENDICULAR FOOTINGS SHALL HAVE TWO SPLICE BARS AT THE TOP AND BOTTOM (24" MIN. SPLICE).

9) THE MINIMUM RADIUS OF BEND FOR REINFORCING STEEL, MEASURED ON THE INSIDE OF THE REBAR, SHALL BE AS FOLLOWS:
#3 := 1-1/5" #4 := 2" #5 = 2.5" #6 = 4.5"

10) AT THE TIME CONRETE IS PLACED, REINFORCING SHALL BE FREE OF MUD, OIL OR OTHER NONMETALLIC COATING THAT DECREASES BOND. EPOXY COATING OF STEEL REINFORCEMENT WHEN NEEDED SHALL BE IN ACCORDANCE WITH THE STANDARDS OF ACI 318-05 SECTIONS 3.5.3.7 AND 3.5.3.8.

11) MINIMUM REINFORCING IN ALL SLABS ON GRADE SHALL BE #4 BARS AT 16" O.C. EACH WAY AT MID-DEPTH, UNLESS NOTED OTHERWISE.

GENERAL STEEL AND WELDING

1) ALL STRUCTURAL STEEL SHALL BE IDENTIFIED IN ACCORDANCE WITH 2006 IBC AND 2007 CBC SECTION 2205A AND AISC 360. WIDE FLANGE SECTIONS TO BE A-572 50 KSI STEEL.

2) STEEL SHAPES, PLATES AND BARS SHALL BE ASTM A-36 UNLESS NOTED OTHERWISE.

3) PIPE STEEL SHALL BE WELDED SEAMLESS PIPE CONFORMING TO ASTM A-53 GRADE "B"; TUBE STEEL TO BE ASTM A500.

4) ALL BOLTS SHALL BE ASTM A-307 UNLESS NOTED OTHERWISE. HIGH-STRENGTH BOLTS SHALL CONFORM TO AISC 360 - A325. HIGH STRENGTH THREADED ROD SHALL BE A449.

5) ALL STRUCTURAL STEEL AND CONNECTIONS SHALL BE FABRICATED AND ERECTED IN ACCORDANCE WITH A.I.S.C. SPECIFICATIONS AND CODE OF STANDARD PRACTICE AS AMENDED TO DATE.

6) WELDING TO BE ELECTRIC-ARC PROCESS BY QUALIFIED AND CERTIFIED WELDERS BY THE CITY OF LOS ANGELES USING APPROVED AND PROPER ELECTRODES. ALL COMPLETE JOINT PENETRATION GROOVE WELDS SHALL HAVE A FILLER METAL WITH A NOTCH TOUGHNESS OF 20 FOOT-POUNDS AVERAGE AT ZERO DEGREES FAHRENHEIT FABRICATOR TO BE LICENSED BY THE CITY OF LOS ANGELES.

7) ALL STRUCTURAL STEEL SHALL BE PAINTED ONE SHOP COAT AND FIELD TOUCH-UP WITH RED LEAD (OR APPROVED ZINC CHROMATE PRIMER) AS NECESSARY. (FIELD PAINTING: TOUCH-UP ALL DAMAGED PAINT, BOLTS AND WELDS.)

8) SHOP DRAWINGS AND DETAILS FOR THE FABRICATION OF ANY STRUCTURAL STEEL SHALL BE APPROVED BY THE CONTRACTOR AND SUBMITTED TO THE ARCHITECT AND STRUCTURAL ENGINEER FOR THEIR REVIEW PRIOR TO FABRICATION. THE STEEL ERECTOR SHALL PROVIDE ALL ERECTION BRACING REQUIRED TO MAINTAIN STRUCTURE PLUMB AND PROPERLY BRACED DURING CONSTRUCTION.

9) SPECIAL INSPECTION SHALL BE PROVIDED FOR ALL STRUCTURAL FIELD WELDING IN ACCORDANCE WITH IBC SECTION 1704, AS INDICATED ON THE PLANS. ALL FIELD WELDING BY L.A. CITY LICENSED WELDERS

10) ONLY THAT FIELD WELDING INDICATED ON PLANS WILL BE PERMITTED.

11) NO HOLES OTHER THAN THOSE SPECIFICALLY DETAILED SHALL BE ALLOWED THROUGH STRUCTURAL STEEL MEMBERS. BURNING OF HOLES IS NOT PERMITTED.

12) ALL WELDING SHALL CONFORM TO 'AWS' SPECIFICATION FOR WELDING. SEE WELDING SPECS BELOW.

13) ALL HEADED STUDS (FOR CONCRETE ANCHORAGE) SHALL BE MANUFACTURED BY 'NELSON' OR APPROVED EQUAL.

14) WHERE FILLET WELD SIZE IS NOT INDICATED, USE 'AWS' MINIMUM SIZE BASED ON THE THICKNESS OF THE THICKER PART BEING WELDED, AS SPECIFIED IN AISC 360 SECTION J2.2.

15) ALL BUTT WELDS TO BE FULL PENETRATION, UNLESS SPECIFICALLY NOTED OTHERWISE.

16) ALL STEEL BEAMS SHALL HAVE 1/4" PLATE WEB STIFFENERS AT 1/3 POINTS OF THEIR SPANS - TWO PLACES MINIMUM PER BEAM.

17) PROVIDE HOT DIP GALVANIZING OR 3" MINIMUM CONCRETE COVER AROUND ALL STRUCTURAL STEEL BELOW GRADE.

COMPOSITE STEEL DECKING

SECTION A: FLOOR DECKING

1) FLOOR DECKING IS VERCO W3 FORMLOK 19 GA ; 3" DECKING THICKNESS ; 5-1/2" AND 6-1/2" TOTAL SLAB DEPTH USING LIGHT WEIGHT CONCRETE AND WITH 6X6 -10/10 WWF AT 1" BELOW TOP OF SLAB. VERCO DECKING COMPLIES WITH ICBO #2078, LOS ANGELES CITY RESEARCH REPORT # 23243 FOR DIAPHRAGM DESIGN VALUES AND RESEARCH REPORT # 23789 FOR ALLOWABLE VERTICAL LOADS.

2) NO SUBSTITUTION WILL BE CONSIDERED UNLESS A WRITTEN REQUEST FOR APPROVAL HAS BEEN SUBMITTED AND RECEIVED BY THE ARCHITECT AT LEAST TEN (10) DAYS PRIOR TO THE BID DATE.

3) STEEL MATERIAL FOR THE DECK UNITS SHALL HAVE A MINIMUM YIELD POINT OF 38,000 PSI AND SHALL CONFORM TO ASTM A446, GRADE A, MODIFIED, OR TO ASTM A611, GRADE C, MODIFIED. TENSILE STRENGTH OF THE MATERIALS SHALL BE 50,000 PSI MINIMUM.

4) ALL STEEL FLOOR UNITS SHALL BE ROLL-FORMED TO ASSURE DIMENSIONAL UNIFORMITY AND STRENGTH. SUFFICIENT EMBOSSMENTS SHALL BE PROVIDED TO TRANSFER TWICE THE HORIZONTAL AND VERTICAL SHEARING FORCES IN THE COMPOSITE SLAB. THE MINIMUM DEPTH OF EMBOSSMENTS OR INDENTS SHALL BE .050".

5) WHERE EXPOSED TO THE WEATHER, THE DECK UNITS SHALL BE GALVANIZED.

6) CONTINUOUS INSPECTION BY DEPUTY BUILDING INSPECTION SHALL BE PROVIDED FOR DECK WELDING FOR DIAPHRAGM CONSTRUCTION AND FOR THE MIXING AND PLACING OF CONCRETE FOR THE SLAB.

7) STEEL DECKING MANUAFACTURER SHALL SUBMIT TO THE ARCHITECT AND THE STRUCTURAL ENGINEER SHOP DRAWINGS FOR THEIR REVIEW PRIOR TO FABRICATION.

8) ALL DECKING SIDE LOCKS SHALL BE COMPATIBLE. ALL STEEL DECKING SHALL HAVE A PRIME PAINTED FINISH.

SECTION B: DECK WELDING

9) DECK WELDING SHALL BE PERFORMED BY LOS ANGELES CITY CERTIFIED LIGHT GAGE WELDERS. PRIOR TO PROCEEDING WITH THE WELDING, THE WELDERS SHALL DEMONSTRATE TO THE DEPUTY INSPECTOR THEIR ABILITY TO PRODUCE THE PRESCRIBED WELD SATISFACTORILY. A SAMPLE SPECIMEN SHALL BE TWISTED AND IF THE DECK MATERIAL TEARS, OR IF THE WELD IN TORISON INDICATES THE PROPER FUSION AREA, THE WELD WILL BE CONSIDERED SATISFACTORY.

GENERAL (CONTINUED)

25) STRUCTURE TO BE BUILT PER PERMITTED PLANS. IF ANY DISCREPANCIES FOUND BETWEEN EXISTING CONDITIONS IN THE FIELD AND EXISTING CONDITIONS ON THESE PLANS, THE CONTRACTOR SHALL CONTACT THE ENGINEER AND ARCHITECT IN WRITTEN FORM EXPLAINING THE DISCREPANCY. ALL STRUCTURAL CONTRUCTION QUESTIONS ARE TO BE IN WRITTEN FORM AND SENT TO THE ENGINEER OF RECORD AT C.W.HOWE ASSOCIATES (FAX : (310) 838-5380) AND ALSO SENT TO THE ARCHITECT OF RECORD BY THE GENERAL CONTRACTOR AND/OR SUBCONTRACTORS.

26) STRUCTURE TO BE BUILT PER PERMITTED PLANS. IF ANY DISCREPANCIES FOUND BETWEEN EXISTING CONDITIONS IN THE FIELD AND EXISTING CONDITIONS ON THESE PLANS, THE CONTRACTOR SHALL CONTACT THE ENGINEER AND ARCHITECT IN WRITTEN FORM EXPLAINING THE DISCREPANCY. ALL STRUCTURAL CONTRUCTION QUESTIONS ARE TO BE IN WRITTEN FORM AND SENT TO THE ENGINEER OF RECORD AT C.W.HOWE ASSOCIATES (FAX : (310) 838-5380) AND ALSO SENT TO THE ARCHITECT OF RECORD BY THE GENERAL CONTRACTOR AND/OR SUBCONTRACTORS.

27) STRUCTURAL OBSERVATION: WHEN THE ENGINEER OF RECORD IS REQUIRED TO PERFORM STRUCTURAL OBSERVATIONS IN THE FIELD DURING CONSTRUCTION. (SEE STRUCTURAL OBSERVATION NOTES) THE FIELD SHALL NOTIFY THE ENGINEER OF RECORD AT LEAST 48 HOURS IN ADVANCE OF THE REQUIRED STRUCTURAL OBSERVATION. CITY INSPECTION SHALL BE SCHEDULED ONE DAY AFTER ENGINEER'S STRUCTURAL OBSERVATION.

FOUNDATIONS

1) SEE SOIL REPORT BY GSC GEOSOILS CONSULTANTS INC. DATED AUGUST 31, 2005, WHICH IS CONSIDERED A PART OF THESE PLANS. ALLOWABLE BEARING PRESSURE = 1,500 PSF. RECOMMENDATIONS THERIN SUPERCEDES STRUCTURAL DRAWINGS..

2) UNEXPECTED SOIL CONDITIONS: ALLOWABLE VALUES AND FOUNDATION DESIGN ARE BASED UPON SOIL CONDITIONS WHICH ARE SHOWN BY TEST BORINGS. ACTUAL SOIL CONDITIONS WHICH DEVIATE APPRECIABLY FROM THAT SHOWN IN THE TEST BORINGS SHALL BE REPORTED TO THE ARCHITECT AND ENGINEER IMMEDIATELY.

3) ALL COMPACTION, FILL, BACKFILLING, AND SITE PREPARATION REQUIREMENTS AND PROCEDURES SHALL COMPLY WITH 2007 CBC.

4) EXCAVATE TO REQUIRED DEPTHS AND DIMENSIONS (AS INDICATED IN THE DRAWINGS), CUT SQUARE AND SMOOTH WITH FIRM LEVEL BOTTOMS. CARE SHALL BE TAKEN NOT TO OVER-EXCAVATE FOUNDATION AT LOWER ELEVATION AND PREVENT DISTURBING OF SOILS AROUND HIGH ELEVATION.

5) FOOTINGS SHALL BE POURED IN NEAT EXCAVATIONS, WITHOUT SIDE FORMS WHENEVER POSSIBLE.

6) CARRY ALL FOUNDATIONS TO REQUIRED DEPTHS INTO UNDISTURBED NATURAL SOIL OR BEDROCK (AS PER STRUCTURAL DRAWINGS) AND AS VERIFIED BY THE APPROPRIATE BUILDING OFFICIAL / SOIL ENGINEER.

7) ALL FOUNDATION EXCAVATIONS SHALL BE INSPECTED AND APPROVED BY THE APPROPRIATE BUILDING OFFICIAL AND/OR A REPRESENTATIVE OF THE SOILS ENGINEER, PRIOR TO FORMING AND PLACEMENT OF REINFORCING OR CONCRETE.

8) FOUNDATIONS SHALL NOT BE POURED UNTIL ALL REQUIRED REINFORCING STEEL, FRAMING HARDWARE, SLEEVES, INSERTS, CONDUITS, PIPES, ETC. AND FORMWORK IS PROPERLY PLACED AND INSPECTED BY THE APPROPRIATE BUILDING OFFICIAL/INSPECTOR(S). IT IS THE RESPONSIBILITY OF THE CONTRACTOR IN CHARGE OF FRAMING HARDWARE TO PROPERLY POSITION "HD" HOLDOWN BOLTS, "CB" COLUMN BASES AND ALL OTHER CAST-IN-PLACE HARDWARE. REFER TO TYPICAL DETAILS. ALL HARDWARE TO BE SECURED PRIOR TO FOUNDATION INSPECTIONS.

9) THE SIDES AND BOTTOMS OF DRY EXCAVATIONS MUST BE MOISTENED JUST PRIOR TO PLACING CONCRETE. COVERSELY, DE-WATER OVER-WET FOOTINGS AS REQUIRED TO PRECLUDE STANDING WATER.

CONCRETE

1) ALL APPLICABLE SECTIONS OF ACI 318 - 05 SHALL BE CONSIDERED AS A PART OF THESE SPECIFICATIONS. ALL CONCRETE WORK SHALL COMPLY WITH 2007 CALIFORNIA BUILDING CODE (C.B.C.) CHAPTER 19.

2) ALL CONCRETE SHALL HAVE A MINIMUM ULTIMATE COMPRESSIVE STRENGTH (F'C) OF 2500 P.S.I. AT TWENTY-EIGHT (28) DAYS. CONCRETE WITH ULTIMATE COMPRESSIVE STRENGTH GREATER THAN 2500PSI SHALL HAVE CONTINUOUS DEPUTIY INSPECTION. ALL CONCRETE SHALL BE REGULAR WEIGHT (UNLESS SPECIFICALLY NOTED OTHERWISE). CONCRETE IN GRADE BEAMS SHALL BE 3000 PSI AND WITH CONTINUOUS SPECIAL DEPUTY INSPECTION.

3) SPECIAL INSPECTION (AS REQUIRED OR SPECIFIED) SHALL CONFORM TO 2007 CBC SECTION 1704. SPECIAL INSPECTION SERVICES SHALL BE PROVIDED BY AN I.C.B.O. CERTIFIED DEPUTY INSPECTOR OR BUILDING DEPARTMENT APPROVED ENGINEER.

4) CEMENT SHALL CONFORM TO C.B.C. SECTION 1903 AND ACI 318-05 SECTION 3.2.1 STANDARD SPECIFICATION FOR PORTLAND CEMENT (ASTM C 150).

5) AGGREGATES SHALL CONFORM TO 2007 C.B.C. 1903 AND ACI 318-05 SECTION 3.3.2. MAXIMUM AGGREGATE SIZE SHALL BE 1-1/4". AGGREGATE SIZE FOR EXPOSED CONCRETE, SUCH AS IN SLABS, SHALL NOT EXCEED 1". GRADATION OF AGGREGATE SIZE SHALL BE PER ASTM C33, C117 AND C136.

6) WHERE NOT SPECIFICALLY DETAILED, THE MINIMUM CONCRETE COVER ON REINFORCING STEEL SHALL BE PER ACI 318-05 SECTION 4.4:

A) CONCRETE CAST AGAINST AND PERMANENTLY EXPOSED TO EARTH OR WEATHER: 3"
B) CONCRETE PLACED AGAINST FORMS, BUT EXPOSED TO EARTH OR WEATHER: 2".
C) SLABS, WALLS, AND JOISTS NOT EXPOSED TO EARTH OR WEATHER: 3/4"

8) MAXIMUM CONCRETE SLUMP SHALL BE 3 INCHES, 4 INCHES FOR CONCRETE STRUCTURAL DECKS.

9) ALL SLABS ON GRADE SHALL BE 6" THICK WITH #4 BARS AT 12" O.C., EACH WAY, AT MID DEPTH, UNLESS NOTED OTHERWISE ON PLANS. PROVIDE 10 MIL VISQUEEN VAPOR BARRIER PROTECTED BY SAND UNDER ALL SLABS AT LIVING AREAS.

10) ALL ANCHOR BOLTS USED IN CONCRETE CONSTRUCTION SHALL HAVE A MINIMUM TOTAL EMBEDMENT AS FOLLOWS, UNLESS NOTED OTHERWISE:

5/8" DIAMETER OR SMALLER: 9"
3/4" DIAMETER: 12"

11) LOCATION OF ALL CONSTRUCTION JOINTS, OTHER THAN SPECIFIED, SHALL BE APPROVED BY THE ARCHITECT AND THE ENGINEER PRIOR TO POURING. CONSTRUCTION JOINTS SHALL BE THOROUGHLY AIR AND WATER CLEANED AND HEAVILY ROUGHENED SO AS TO EXPOSE COARSE AGGREGATES. ALL SURFACES TO RECEIVE CONCRETE SHALL BE MAINTAINED CONTINUOUSLY WET AT LEAST THREE HOURS IN ADVANCE OF PLACING CONCRETE.

12) ALL REINFORCING STEEL, ANCHOR BOLTS, DOWELS, INSERTS, AND ANY OTHER HARDWARE TO BE SET INTO CONCRETE SHALL BE WELL SECURED IN POSITION PRIOR TO PLACING OF CONCRETE.

13) THE ARCHITECT, ENGINEER, AND INSPECTOR SHALL BE NOTIFIED, IN A TIMELY MANNER, FOR REINFORCING INSPECTION PRIOR TO THE POURING OF ANY CONCRETE.

14) THE CONTRACTOR SHALL OBTAIN APPROVAL FROM THE ARCHITECT AND THE ENGINEER PRIOR TO PLACING SLEEVES, PIPES, DUCTS, CHASES, CORING, AND OPENING ON OR THROUGH STRUCTURAL CONCRETE BEAMS, WALLS, FLOORS AND ROOF SLABS, UNLESS SPECIFICALLY NOTED OR DETAILED. ALL PIPES OR CONDUITS PASSING THROUGH CONCRETE MEMBERS SHALL BE SLEEVED WITH ANY MATERIAL NOT HARMFUL TO CONCRETE WITHIN LIMITATIONS OF THE ACI 318-05 SECTION 6.3.

15) FORMWORK DESIGN AND REMOVAL IS THE RESPONSIBILITY OF THE CONTRACTOR AND SHALL CONFORM TO 2007 C.B.C SECTION 1906.1 AND 1906.2 AND ACI 318-05 SECTION 6.1 AND 6.2.

16) FORM REMOVAL: REMOVE FORMS IN ACCORDANCE WITH THE FOLLOWING SCHEDULE:

SIDE FORMS AT FOOTINGS: MINIMUM 2 DAYS.
EDGE FORMS OF SLAB ON GRADE STRIP 1: MINIMUM 1 DAY.

17) VIBRATE ALL CONCRETE AS IT IS PLACED WITH A MECHANICAL VIBRATOR OPERATED BY EXPERIENCED PERSONNEL. THE VIBRATOR SHALL BE USED TO CONSOLIDATE THE CONCRETE, NOT TRANSPORT IT. REINFORCING STEEL AND FORMS SHALL NOT BE VIBRATED.

18) ALL CONCRETE WORK SHALL BE DONE IN ACCORDANCE WITH THE LATEST EDITION OF THE AMERICAN CONCRETE INSTITUTE (A.C.I.) BUILDING CODE (A.C.I. 318-05) AND THE LATEST EDITIONS OF THE A.C.I. MANUALS OF CONCRETE PRACTICE AND SPECIFICATIONS.

19) CONCRETE SHALL BE MAINTAINED IN A MOIST CONDITION FOR A MINIMUM OF FIVE DAYS AFTER PLACEMENT.

20) THE CONTRACTOR SHALL SUBMIT REQUESTS FOR THE USE OF ADMIXTURES TO THE ARCHITECT AND ENGINEER FOR THEIR REVIEW AND APPROVAL.

21) MIX DESIGNS SHALL BE PREPARED BY AN APPROVED TESTING LABORATORY AND SHALL BE SUBMITTED TO THE ARCHITECT AND STRUCTURAL ENGINEER FOR APPROVAL.

22) ONLY ONE GRADE OF CONCRETE SHALL BE ALLOWED ON THE PROJECT SITE AT ANY ONE TIME.

23) UNLESS SPECIFICALLY DETAILED OR NOTED OTHERWISE, CONSTRUCTION AND CONTROL JOINTS SHALL BE PROVIDED IN ALL CONCRETE SLABS, AND SHALL BE LOCATED SUCH THAT THE AREA WITHIN THE JOINTS DOES NOT EXCEED 400 SQUARE FEET (20' X 20' AREA).

GENERAL

1) ALL WORKMANSHIP AND MATERIALS SHALL CONFORM TO THE MINIMUM STANDARDS OF THE 2006 EDITION OF THE IBC, AND THE 2007 CALIFORNIA BUILDING CODE - AND ALL OTHER REGULATING AGENCIES EXERCISING AUTHORITY OVER ANY PORTION OF THE WORK.

2) THE CONTRACTOR SHALL EXAMINE THE DRAWINGS AND SPECIFICATIONS (CONTRACT DOCUMENTS) AND VERIFY ALL DIMENSIONS AND CONDITIONS AND REPORT ANY DISCREPANCIES (BETWEEN ARCHITECTURAL AND STRUCTURAL OR BETWEEN STRUCTURAL AND MEP OR BETWEEN STRUCTURAL AND THE CONDITIONS IN THE FIELD) TO THE ENGINEER AND ARCHITECT BEFORE PROCEEDING WITH CONSTRUCTION OR FINAL BIDDING. THE ARCHITECTURAL PLANS SHALL BE USED FOR ALL DIMENSIONS AND WALL LAYOUTS.

3) ALL INFORMATION ON EXISTING CONDITIONS SHOWN ON THE DRAWINGS ARE BASED ON BEST PRESENT KNOWLEDGE AVAILABLE, BUT WITHOUT GUARANTEE OF ACCURACY. THE CONTRACTOR SHALL VERIFY AND BE RESPONSIBLE FOR VERIFYING ALL DIMENSIONS AND CONDITIONS AT THE SITE. BEFORE FINAL BIDDING AND/OR DURING CONSTRUCTION THE CONTRACTOR SHALL NOTIFY THE ENGINEER OF ANY DISCREPENCIES BETWEEN THE PLANS AND THE CONDITIONS AT THE SITE, OR BETWEEN THE STRUCTURAL AND ARCHITECTURAL DRAWINGS. SHOULD ANY CONDITION ARISE WHERE THE INTENT OF THE DRAWINGS IS IN DOUBT, OR WHERE THERE APPEARS TO BE A DISCREPANCY BETWEEN THE DRAWINGS (ARCHITECTURAL AND/OR STRUCTURAL) AND THE CONDITION IN THE FIELD, THE ARCHITECT AND ENGINEER SHALL BE NOTIFIED PRIOR TO CONTINUING WITH WORK / FINAL PRICING.

4) THERE SHALL BE NO DEVIATION FROM THE PLANS, DETAILS, NOTES, AND SPECIFICATIONS WITHOUT THE WRITTEN APPROVAL OF THE ENGINEER.

5) DO NOT SCALE STRUCTURAL PLANS OR DETAILS. ONLY WRITTEN DIMENSIONS SHALL BE USED.

6) THE FOLLOWING NOTES, TYPICAL DETAILS AND SCHEDULES SHALL APPLY TO ALL PHASES OF THIS PROJECT UNLESS NOTED OR SHOWN OTHERWISE ON PLANS. TYPICAL DETAILS MAY NOT BE REFERENCED AND WILL APPLY TO SIMILAR CONDITIONS.

7) SPECIFIC NOTES AND DETAILS SHALL TAKE PRECEDENCE OVER GENERAL NOTES AND TYPICAL DETAILS.

8) THE CONTRACTOR SHALL IMMEDIATELY NOTIFY THE ENGINEER OF ANY CONDITION WHICH, IN HIS OPINION,MIGHT ENDANGER THE STABILITY OF THE STRUCTURE OR CAUSE DISTRESS OF THE STRUCTURE.

9) ALL WORK SHALL CONFORM TO THE BEST PRACTICE PREVAILING IN THE VARIOUS TRADES COMPRISING THE WORK. THE CONTRACTOR SHALL BE RESPONSIBLE FOR COORDINATING THE WORK OF ALL TRADES.

10) THESE NOTES, DETAILS, DRAWINGS AND SPECIFICATIONS (CONTRACT DOCUMENTS) REPRESENT THE FINISHED STRUCTURE, AND DO NOT INDICATE THE METHOD OF CONSTRUCTION. THE CONTRACTOR SHALL SUPERVISE AND DIRECT THE WORK AND SHALL BE SOLELY RESPONSIBLE FOR CONSTRUCTION MEANS, METHODS, TECHNIQUES, SEQUENCES AND PROCEDURES, INCLUDING TEMPORARY SHORING AND SAFETY.

11) THE CONTRACTOR SHALL REFER TO THE SPECIFICATIONS FOR INFORMATION NOT COVERED BY THE DRAWINGS.

12) THE CONTRACTOR SHALL PROVIDE THE DESIGN, MATERIALS, AND FABRICATION OF ALL TEMPORARY BRACING AND SHORING FOR ALL STRUCTURAL MEMBERS AS REQUIRED FOR STRUCTURAL STABILITY OF THE STRUCTURE DURING ALL PHASES OF THE CONSTRUCTION.

13) THE CONTRACTOR SHALL TAKE ALL STEPS NECESSARY TO ENSURE PROPER ALIGNMENT OF THE STRUCTURE AFTER THE INSTALLATION OF ALL STRUCTURAL AND FINISH MATERIALS. THIS SHALL INCLUDE ANY NECESSARY PRE-LOADING OF THE STRUCTURE TO DETERMINE FINAL POSITION OF THE COMPLETED WORK.

14) OBSERVATION VISITS TO THE PROJECT SITE BY FIELD REPRESENTATIVES OF THE ENGINEER (SUPPORT SERVICES) SHALL NOT INCLUDE INSPECTIONS OF SAFETY OR PROTECTIVE MEASURES, NOR CONSTRUCTION PROCEDURES, TECHNIQUES OR METHODS. ANY SUPPORT SERVICES PERFORMED BY THE ENGINEER DURING ANY PHASE OF THE CONSTRUCTION, SHALL BE DISTINGUISHED FROM CONTINUOUS AND DETAILED INSPECTION SERVICES (AS REQUIRED BY ANY REGULATING GOVERNMENTAL AGENCY, I.E. LOCAL BUILDING DEPARTMENT) PROVIDED BY OTHERS. THESES SUPPORT SERVICES, WHETHER MATERIAL OR WORK, ARE PERFORMED SOLELY FOR THE PURPOSE OF ASSISTING IN QUALITY CONTROL AND IN ACHIEVING CONFORMANCE TO THE CONSTRUCTION DOCUMENTS, BUT DO NOT GUARANTEE THE CONTRACTOR'S PERFORMANCE AND SHALL NOT BE CONSTRUED AS SUPERVISION OF CONSTRUCTION.

15) COORDINATION WITH ARCHITECTURAL PLANS; THE ARCHITECT SHALL COORDINATE STRUCTURAL PLANS WITH ALL OTHER PROFESSIONAL DISCIPLINES INCLUDING ARCHITECTURAL PLANS, ANY CONFLICTS BETWEEN THE STRUCTURAL PLANS AND OTHER CONSULTANTS SHALL BE BROUGHT TO THE ATTENTION OF THE ENGINEER IN THE DESIGN PHASE.

16) PROVIDE OPENINGS AND SUPPORTS AS REQUIRED PER TYPICAL DETAILS AND NOTES FOR MECHANICAL AND ELECTRICAL EQUIPMENT, VENTS, DUCTS, PIPING, ETC. ALL MECHANICAL AND ELECTRICAL EQUIPMENT SHALL BE PROPERLY "SWAY" BRACED AGAINST ALL LATERAL (WIND, SEISMIC, VIBRATION, ETC.) FORCES.

17) PRIOR TO COMMENCING WITH THE CONSTRUCTION, THE CONTRACTOR SHALL REFER TO ARCHITECTURAL DRAWINGS TO COORDINATE WITH STRUCTURAL DRAWINGS, AND ANY DISCREPANCY BETWEEN THESE DRAWINGS SHALL BE REFERRED TO THE ENGINEER FOR CLARIFICATION BEFORE START OF CONSTRUCTION.

18) IN THE EVENT THAT CERTAIN FEATURES OF THE CONSTRUCTION ARE NOT FULLY SHOWN ON THE DRAWINGS OR CALLED FOR IN THE GENERAL NOTES OR SPECIFICATIONS, THEN THEIR CONSTRUCTION SHALL BE OF THE SAME CHARACTER AS FOR SIMILAR (SIM.) CONDITIONS THAT ARE SHOWN OR CALLED FOR.

19) THE CONTRACTOR SHALL HAVE A COPY OF THE PROJECT SOILS / GEOTECHNICAL / FOUNDATION INVESTIGATIONS ON THE JOB SITE AT ALL TIMES. THESE REPORTS SHALL BE CONSIDERED AS A PART OF THESE PLANS AND THE CONTRACTOR SHALL INCORPORATE ALL RECOMMENDATIONS/REQUIREMENTS OF SAID REPORTS INTO THE CONSTRUCTION OF THIS PROJECT.

20) ASTM DESIGNATIONS AND STANDARDS, ICBO REPORTS, AND CITY OF LOS ANGELES (COLA) RESEARCH REPORTS (RR) REFER TO THE LATEST AMENDMENTS.

21) ONLY "BUILDING DEPARTMENT APPROVED" STRUCTURAL WORKING DRAWINGS (AND ALL OTHER CONSTRUCTION DOCUMENTS) ARE PERMITTED TO BE USED FOR CONSTRUCTION ON THIS PROJECT. ALL OTHER DRAWINGS ARE OBSOLETE AND ARE NOT PERMITTED ON THE JOB SITE, NOR SHALL THEY BE USED FOR ANY CONSTRUCTION PURPOSES (INCLUDING THE CALCULATION OF ALL FINAL ESTIMATES AND BIDS AND CONTRACTS). ANY CONTRACTOR USING UNAPPROVED DRAWINGS WILL BE HELD SOLELY RESPONSIBLE FOR ALL WORK NOT PERFORMED IN ACCORDANCE WITH THE "APPROVED" DRAWINGS.

22) THESE PLANS REPRESENT THE STRUCTURAL DESIGN ONLY. NO INFORMATION NOR WARRANTY IS PROVIDED FOR ARCHITECTURAL INFORMATION, INCLUDING BUT NOT LIMITED TO, WATERPROOFING DETAILS, DRAINAGE, VENTILATION OF FRAMING, AND ARCHITECTURAL DIMENSIONS.

23) ALL REPORTS BY THE SPECIAL DEPUTY INSPECTOR SHALL BE SUBMITTED TO THE ENGINEER AND ARCHITECT.

24) NO WARRANTY: IN PERFORMANCE OF PROFESSIONAL SERVICES, THE ENGINEER SHALL USE THAT DEGREE OF CARE AND SKILL ORDINARILY EXERCISED UNDER SIMILAR CIRCUMSTANCES BY OTHER MEMBERS OF THE PROFESSION IN THIS LOCALE AT THE TIME THE SERVICES ARE RENDERED. NO OTHER WARRANTY, EITHER EXPRESSED OR IMPLIED, IS MADE IN CONNECTION WITH RENDERING OF PROFESSIONAL SERVICES.

SHEET INDEX

GENERAL NOTES AND SPECIFICATIONS S-1
QUALITY ASSURANCE SPECIFICATIONS FOR STEEL MOMENT FRAMES S-1.1
QUALITY ASSURANCE SPECIFICATIONS FOR STEEL MOMENT FRAMES S-1.2
QUALITY ASSURANCE SPECIFICATIONS FOR STEEL MOMENT FRAMES S-1.3
FOUNDATION PLAN S-2
SECOND FLOOR FRAMING PLAN S-3
ROOF FRAMING PLAN S-4
STRUCTURAL DETAILS S-5
STRUCTURAL DETAILS S-6
STRUCTURAL DETAILS S-7
STRUCTURAL SECTIONS S-8
FRAME ELEVATIONS S-9

REVISIONS DATE

C. W. Howe Partners Inc.
Structural Engineering Consultants
3347 Motor Avenue, Suite 200 Los Angeles, CA 90034
(310) 838-0383 tel (310) 838-5380 fax www.cwhowe.com

NOT FOR CONSTRUCTION UNTIL SIGNED BY ENGINEER

CARL W. HOWE
PROFESSIONAL ENGINEER
CIVIL
No. 44773
EXP. 3/31/10
STATE OF CALIFORNIA

HOFFMAN/CASTLEMAN RESIDENCE
1445 EL BASQUE COURT
PACIFIC PALISADES, CA90272

GENERAL NOTES AND SPECIFICATIONS

PROJECT NUMBER : 07E04
PROJ. ENG'R. / CHK'D / DRAWN: NSP / / JMH
DATE : 2008
SCALE : NONE
SHEET NUMBER : S-1

PRINTED: OCTOBER 6, 2008

STEEL MOMENT FRAME SPECIFICATIONS AND QUALITY ASSURANCE

A. GENERAL REQUIREMENTS

1. CODES:
THE DESIGN AND CONSTRUCTION OF STEEL MOMENT FRAMES SHALL BE IN COMPLIANCE WITH THE FOLLOWING CODES:
A. 2002 CITY OF LOS ANGELES BUILDING CODE, 2001 CBC & 1997 UBC.
B. AISC SEISMIC PROVISIONS FOR STRUCTURAL STEEL BUILDINGS, PART I (LRFD) AND PART III (ASD), DATED MAY 21, 2002, AND
C. AWS D1.1/D1.1M:2002 STRUCTURAL WELDING CODE - STEEL.

2. MATERIAL SPECIFICATIONS
A. STRUCTURAL STEEL SHALL COMPLY WITH UBC STANDARD 22-1 AND THE FOLLOWING ASTM STANDARD SPECIFICATIONS:
I. WIDE FLANGE SHAPES.....................ASTM A572 (50), A992 (50) IN MOMENT FRAMES
II. CONTINUITY, DOUBLER AND COLUMN BASE PLATES, SHEAR TABS....ASTM A36
III. ANCHOR BOLTS AT COLUMN BASE PLATES...............................A325
IV. FABRICATE AND ERECT STRUCTURAL STEEL IN COMPLIANCE WITH EITHER THE 2001 EDITION OF AISC "LOAD AND RESISTANCE FACTOR SPECIFICATION FOR STRUCTURAL STEEL BUILDINGS"
B. HIGH STRENGTH BOLTS SHALL COMPLY WITH THE FOLLOWING REQUIREMENTS AND ASTM STANDARD SPECIFICATIONS:
I. HIGH STRENGTH BOLTS, THREADED RODS, NUTS, AND WASHERS................ASTM A325, A490
II. SHALL BE INSTALLED IN ACCORDANCE WITH THE "SPECIFICATIONS FOR STRUCTURAL JOINTS USING ASTM A325 OR A490 BOLTS."
III. SHALL BE TIGHTEN TO A SNUG TIGHT CONDITION THAT IS AT LEAST THE MINIMUM PROPER TENSION AND VERIFIED USING A CALIBRATED TENSION MEASURING DEVICE.
IV. SHALL BE SLIP CRITICAL HIGH STRENGTH BOLTS.
V. ALL FAYING SURFACES OF CONNECTIONS WITH HIGH STRENGTH FASTENERS SHALL BE PREPARED AS REQUIRED FOR CLASS A PER THE 2002 AISC SEISMIC PROVISION, SECTION 7.2.
C. FILLER METAL PROPERTIES AND SPECIFICATIONS SHALL BE AS FOLLOWS:
I. ELECTRODES SHALL BE OF A LOW-HYDROGEN TYPE CONFORMING TO AWS SPECIFICATIONS AS REFERENCED IN TABLE 7 ON SHEET 1.2.
II. FILLER METALS SHALL BE CLASSIFIED FOR NOMINAL 70 KSI TENSILE STRENGTH.
III. THE MAXIMUM PERMITTED ELECTRODE DIAMETER SHALL BE PER TABLE 5 ON SHEET 1.2.
IV. FILLER METALS SHALL HAVE A MINIMUM CHARPY V-NOTCH (CVN) TOUGHNESS OF 20 FT-LBF AT -20°F USING AWS A5 CLASSIFICATION TEST METHODS.
V. THE USE OF INTERMIXED WELDS SHALL NOT OCCUR UNLESS IT CAN BE DEMONSTRATED BY TESTING IN ACCORDANCE WITH AWS D1.1/D1.1M:2002 SECTION 4.
VI. THE PARAMETERS ESTABLISHED BY THE ELECTRODE MANUFACTURER SHALL BE REFLECTED IN THE WPS.
D. OTHER MATERIALS NOT LISTED IN UBC STANDARD 22-1 OR LABC CHAPTER 35 ARE NOT PERMITTED WITHOUT SPECIFIC APPROVAL FROM THE DEPARTMENT. STEEL HAVING DUAL ASTM DESIGNATION SHALL BE CLEARLY IDENTIFIED ON EACH SPECIFIC PLAN DETAIL.
E. ALL STRUCTURAL STEEL SHALL BE ONE SHOP COAT & FIELD TOUCH-UP WITH RED LEAD (OR APPROVED ZINC CHROMATE PRIMER) AS NECESSARY. (FIELD PAINTING: TOUCH -UP ALL DAMAGED PAINT, BOLTS & WELDS). PROVIDE HOT DIP GALVANIZING OR 3" MINIMUM CONCRETE COVER AROUND ALL STRUCTURAL STEEL BELOW GRADE.
F. BASEPLATE GROUT SHALL HAVE A CURRENT LARR NUMBER. USE EMBECO 885 OR EQUIVALENT.
G. ALL STEEL BEAMS SHALL HAVE 1/4" PLATE WEB STIFFENERS AT 1/3 POINTS OF THEIR SPANS. TWO PLACES MINIMUM PER BEAM.
H. COLUMNS & BEAMS SHALL HAVE 1/2" DIA. STUDS WELDED AT 24" O.C. FOR WOOD NAILER ATTACHMENTS-TYPICAL.
I. NO HOLES OTHER THAN THOSE SPECIFICALLY DETAILED SHALL BE PERMITTED. BURNING OF HOLES IS NOT PERMITTED.
J. ALL HEADED STUDS (FOR CONCRETE ANCHORAGE) SHALL BE MANUFACTURED BY "NELSON" OR APPROVED EQUAL.

3. WELDING PROCESSES
STRUCTURAL WELDING SHALL BE LIMITED TO THE SHIELDED METAL ARC WELDING OR FLUX CORED ARC WELDING PROCESSES. ALL WELDING TO BE DONE BY QUALIFIED & LA CITY CERTIFIED WELDERS.

4. BASE METAL REPAIRS OR RESTORATIONS
ANY REPAIR OR RESTORATION OF BASE METAL SHALL COMPLY WITH ALL OF THE FOLLOWING:
A. AWS D1.1/D1.1M:2002, SECTION 5.26, AND ASTM A6/A6M-02, SECTION 9.2, 9.3, 9.4 AND 9.5,
B. ENGINEER OF RECORD SHALL REVIEW AND APPROVE THE WPS FOR REPAIR PROCEDURES PRIOR TO WELDING,
C. ALL WELDING SHALL BE PERFORMED USING LOW-HYDROGEN PROCESS OR WITH SMAW USING LOW-HYDROGEN ELECTRODES,
D. PROVIDE CONTINUOUS VISUAL INSPECTION BY THE DEPUTY INSPECTOR, AND
E. PROVIDE NON-DESTRUCTIVE TESTING.

5. DEVIATIONS FROM THE STANDARD QUALITY ASSURANCE PLAN
WHEN DEVIATIONS FROM THE STANDARD QA PLAN ARE MADE, COMPLY WITH ALL OF THE FOLLOWING:
A. DEVIATIONS FROM THIS STANDARD QA PLAN SHALL BE APPROVED BY THE DEPUTY INSPECTOR AND CITY BUILDING INSPECTOR PRIOR TO COMMENCEMENT OF WORK.
B. ALTERNATE PROCEDURES, SPECIFICATIONS, OR DETAILS SHALL BE REVIEWED AND APPROVED BY THE ENGINEER OF RECORD.
C. SUPPLEMENTAL TESTING AND ADDITIONAL SPECIFICATIONS MAY BE REQUIRED TO APPROVE ALTERNATE PROCEDURES, SPECIFICATIONS, OR DETAILS.
D. CONFORMANCE WITH ALL APPLICABLE PROVISIONS OF THE 2002 LABC AND AWS D1.1/D1.1M:2002 IS REQUIRED.

STEEL MOMENT FRAME SPECIFICATIONS AND QUALITY ASSURANCE (CONT.)

B. QUALITY ASSURANCE

1. CERTIFICATION
A. INSPECTORS SHALL BE LADBS CERTIFIED DEPUTY INSPECTORS PER LABC SECTION 1701.2 AND INFORMATION BULLETIN P/BC 2002-035 "REGULATIONS REGARDING REGISTRATION FOR DEPUTY AND CONTROLLED ACTIVITIES INSPECTION. EMPLOYMENT SHALL BE IN ACCORDANCE WITH INFORMATION BULLETIN P/BC 2002-034 "EMPLOYMENT AND DUTIES OF A REGISTERED DEPUTY INSPECTOR."
B. WELDERS SHALL BE LADBS CERTIFIED WELDERS FOR THE STRUCTURAL STEEL CLASSIFICATION PER LABC SECTION 1701.18.1, 2205.10, AND INFORMATION BULLETIN P/BC 2002-045 "WELDER CERTIFICATION RULES AND REGULATIONS."
C. SHOP WELDS SHALL BE PERFORMED IN AN LADBS CERTIFIED FABRICATOR'S SHOP PER LAMC SECTION 96.204(G) AND INFORMATION BULLETIN P/BC 2002-042 "APPLICATION FOR APPROVAL AS FABRICATOR."
D. TECHNICIANS PERFORMING NDT SHALL BE CERTIFIED FOR LEVEL II IN ACCORDANCE WITH ASNT SNT-TC-1A 2001 EDITION BY A TESTING AGENCY APPROVED PER LAMC SECTION 98.0503 AND INFORMATION BULLETIN P/BC 2002-058 "GUIDELINES FOR RECOGNITION OF TESTING AGENCIES."

2. PRE-CONSTRUCTION MEETING
A. THE OWNER (OR OWNER'S REPRESENTATIVE) SHALL ARRANGE A PRE-CONSTRUCTION MEETING(S) WITH THE ENGINEER OF RECORD, THE CONTRACTOR (OR AFFECTED SUB-CONTRACTOR), AND THE DEPUTY INSPECTOR TO DISCUSS AND REVIEW WELDING PROCEDURES, BOLTING PROCEDURES, AND INSPECTION REQUIREMENTS.

3. STRUCTURAL OBSERVATION
STRUCTURAL OBSERVATION SHALL BE PERFORMED IN ACCORDANCE WITH INFORMATION BULLETIN P/BC 2002-024. THE STRUCTURAL OBSERVER SHALL:
A. PERFORM STRUCTURAL OBSERVATION LISTED IN TABLE 6B, PLUS REVIEW & APPROVE STEEL SHOP DRAWINGS GIVEN BY CONTRACTOR TO ENGINEER OF RECORD.
B. PERFORM STRUCTURAL OBSERVATION OF STEEL & COMPLETED WELDING PRIOR TO PLACEMENT OF DECKING, COVERING BY FIREPROOFING, ENCASEMENT IN CONCRETE OR PLACEMENT OF OTHER FINISHES.
C. SUBMIT OBSERVATION REPORT(S) TO THE CITY BUILDING INSPECTOR (THROUGH CONTRACTOR) AT EACH STAGE OBSERVED AND UPON COMPLETION OF THE STRUCTURAL SYSTEM.
D. STATE IN THE REPORT THAT THE STEEL MOMENT FRAME SYSTEM VISUALLY CONFORMS WITH THE APPROVED STRUCTURAL PLANS AND SPECIFICATIONS.

4. DEPUTY INSPECTION
THE FOLLOWING ARE THE BASIC QUALITY ASSURANCE RESPONSIBILITIES OF THE DEPUTY INSPECTORS:
A. ARRIVE ON THE JOB IN SUFFICIENT TIME TO VERIFY THE PERMIT INFORMATION, CHECK FOR PRIOR INSPECTIONS AND/OR APPROVALS BY THE CITY BUILDING INSPECTOR OR PREVIOUS DEPUTY INSPECTORS, CHECK THE QUALITY OF ALL MATERIALS AND BECOME FAMILIAR WITH THE APPROVED STRUCTURAL PLANS AND SPECIFICATIONS.
B. VERIFY THAT STRUCTURAL STEEL DELIVERED IS FROM A FABRICATOR CURRENTLY LICENSED BY THE DEPARTMENT.
C. IDENTIFY MATERIAL FROM AN OFFSITE FABRICATOR IN ACCORDANCE WITH LABC SECTION 2203 AND COMPARE TO THE APPROVED PLANS AND SPECIFICATIONS.
D. VERIFY THAT EACH STEEL PIECE IS LABELED WITH THE APPROVED FABRICATOR'S SHOP NAME AND LICENSE NUMBER.
E. VISUAL CHECK SHOP WELDS, JOINT PREPARATION, FAYING SURFACES, INDENT STAMPS AND COLOR CODES OF HIGH STRENGTH STEEL, EXCESSIVE MILL SCALE OR LAMINATION, AND DIMENSIONAL CONFORMITY WITH THE APPROVED PLANS.
F. ENSURE THAT WELDING COMPLIES WITH AWS D1.1/D1.1M:2002.
G. INSPECT, BEFORE ANY WELDING BEGINS, JOINT PREPARATION, FIT-UP, CONDITION OF SURFACES TO BE WELDED, STORAGE AND USE OF ELECTRODES, CURRENT LICENSE OF ALL WELDERS, AND VOLTAGE/AMPERAGE OF WELDING MACHINES.
H. MEASURE VOLTAGE/AMPERAGES NEAR THE ARC WITH A HAND HELD CALIBRATED AVERAGING TYPE METER. THE METER SHALL BE CALIBRATED NOT LESS THAN ONCE A YEAR. THIS EQUIPMENT SHALL BE USED BY THE FABRICATOR, ERECTOR, AND DEPUTY INSPECTOR.
I. DURING WELDING OPERATION, PROVIDE CONTINUOUS INSPECTION PARTICULARLY ON MULTIPLE PASS WELDS TO ASSURE THAT EACH PASS HAS BEEN PREPARED CORRECTLY, PREHEAT AND INTERPASS TEMPERATURES ARE MAINTAINED AND THAT FINISHED WELDS SHALL BE THE CORRECT SIZE AND WITHOUT REJECTABLE DISCONTINUITIES.
J. VERIFY TYPE AND SIZE OF BOLTS AND WASHERS, CHECK MILL CERTIFICATES, AND VERIFY FAYING SURFACES ARE FREE OF BURRS, SCALE, RUST, GREASE OR ANYTHING THAT MAY INHIBIT FULL CONTACT.
K. VERIFY CONNECTIONS INVOLVING HIGH STRENGTH BOLTS AND WELDS ARE FABRICATED AND ERECTED IN A SEQUENCE SPECIFIED BY THE ENGINEER OF RECORD.
L. VERIFY HIGH STRENGTH BOLTS ARE NOT WELDED OR DAMAGED BY PREHEATING.
M. VERIFY WASHERS ARE ALWAYS INSTALLED WITH ALL BOLTS, EXCEPT A-490 BOLTS WHICH REQUIRE WASHERS UNDER BOTH ELEMENTS.
N. PERFORM DEPUTY INSPECTOR OBSERVATION LISTED IN TABLE 6A.
O. VERIFY THE ENGINEER OF RECORD HAS APPROVED THE WRITTEN WELDING PROCEDURE SPECIFICATION (WPS) PREPARED BY THE FABRICATOR OR ERECTOR. IF VARIES FROM THESE SPECIFICAIONS THE WPS SHALL INCLUDE THE FOLLOWING:
I. ALL APPLICABLE CODE REQUIREMENTS, THIS STANDARD PLAN, AND ANY OTHER INFORMATION NECESSARY TO PRODUCE THE WELDS.
II. LIST THE APPLICABLE BASE METAL TYPES AND THICKNESSES.
III. LIST THE WELDING JOINT DETAILS, INCLUDING JOINT TYPE, WELD TYPE, JOINT GEOMETRY, AND APPLICABLE DIMENSIONS. INDIVIDUAL WELD PASSES SHALL BE IDENTIFIED IN SKETCHES AND NUMBERED TO IDENTIFY THE SEQUENCE OF THEIR DEPOSITION. THE SKETCHES SHALL IDENTIFY THE MAXIMUM LAYER THICKNESSES AND BEAD WIDTHS. IN NO CASE SHALL LAYER THICKNESSES EXCEED 1/4 INCH NOR SHALL THE MAXIMUM BEAD WIDTH EXCEED 5/8 INCH.
IV. LIST THE WELDING PROCESSES.
V. SPECIFY THE REQUIRED WELDING POSITIONS.
VI. LIST THE FILLER METAL PER AWS D1.1 FOR ELECTRODE SPECIFICATION AND CLASSIFICATION (SEE TABLE 7), AS WELL AS INFORMATION REGARDING SHIELDING MATERIAL TO BE USED.
VII. INDICATE THE MINIMUM PREHEAT AND INTERPASS TEMPERATURES (SEE TABLE 4) AND POST WELD HEAT TREATMENT.
VIII. LIST ALL APPLICABLE ELECTRICAL CHARACTERISTICS FOR THE WELDING PROCESS EMPLOYED. WPS SHALL CLEARLY INDICATE THE SPECIFIC VALUES REQUIRED FOR EACH WELDING PASS. THESE ELECTRICAL CHARACTERISTICS SHALL INCLUDE AT MINIMUM THE FOLLOWING:
(1) ELECTRODE DIAMETER (SEE TABLE 5),
(2) TYPE OF CURRENT, AND ACCEPTABLE RANGES OF CURRENT MEASURED IN AMPERAGE,
(3) VOLTAGE,
(4) TRAVEL SPEED (RANGE), AND
(5) AMPERAGE, VOLTAGE AND ELECTRODE EXTENSION (AS APPLICABLE) SHALL BE WITHIN THE FILLER METAL MANUFACTURER'S RECOMMENDATIONS.
IX. A COPY OF THE ELECTRODE MANUFACTURER'S TECHNICAL INFORMATION WITH ID # LISTED SHALL BE ATTACHED TO THE WPS .
P. WELD JOINTS NOT CONFORMING TO CHAPTER 3 OF AWS D1.1/D1.1M:2002 MUST BE TESTED BY AN APPROVED TESTING AGENCY AND ACCEPTED BY BOTH THE ENGINEER OF RECORD AND THE DEPARTMENT'S MATERIAL CONTROL SECTION BEFORE THE WELD IS PERFORMED. MATERIAL CONTROL SECTION CAN BE CONTACTED AT:

LADBS MATERIAL CONTROL SECTION
221 N. FIGUEROA ST., SUITE 1540
LOS ANGELES, CA 90012
(213) 482-0380 OR 1-888-LA-4BUILD

Q. NOTIFY THE CONTRACTOR, ENGINEER OF RECORD, AND CITY BUILDING INSPECTOR OF ANY DEVIATIONS OR NON-COMPLIANCE WITH THE APPROVED WPS, PLANS OR SPECIFICATIONS.
R. "DEPUTY INSPECTION REPORT FORM B-94" SHALL BE SUBMITTED ON A WEEKLY BASIS TO THE CITY BUILDING INSPECTOR, UNLESS DETERMINED OTHERWISE BY THE CITY BUILDING INSPECTOR.
S. DURING THE EXECUTION OF THE WORK, THE DEPUTY INSPECTOR SHALL NOT UNDERTAKE OR ENGAGE IN ANY OTHER TASK OR OCCUPATION WHICH WILL INTERFERE WITH THE PROPER PERFORMANCE OF THE DUTIES OF SUCH INSPECTION.

5. ELECTRODE STORAGE AND ATMOSPHERIC EXPOSURE
A. ELECTRODES ARE CONSIDERED TO BE EXPOSED TO THE ATMOSHPERE IF:
I. THE MANUFACTURER'S SEALED ELECTRODE CONTAINERS OR PACKAGINGS ARE OPENED OR DAMAGED, OR
II. OUTSIDE OF BAKING OR STORAGE OVENS.
B. MODIFICATION OR LUBRICATION OF ELECTRODES ARE NOT PERMITTED.
C. DRYING OF ELECTRODES IN BAKING OR STORAGE OVENS ARE PERMITTED AS RECOMMENDED BY THE MANUFACTURER.
D. ELECTRODES SHALL BE IDENTIFIED TO FACILITATE MONITORING OF TOTAL ATMOSPHERIC EXPOSURE TIME.
E. STORAGE AND ATMOSPHERIC EXPOSURE OF AWS A5.1-91/A5.5-96 LOW-HYDROGEN SMAW ELECTRODES SHALL BE IN ACCORDANCE WITH AWS D1.1/D1.1M:2002 SECTION 5.3.2.
F. FCAW ELECTRODES NOT CONSUMED WITHIN 24 HRS OF ACCUMULATED ATMOSPHERIC EXPOSURE TIME SHALL NOT BE USED. MANUFACTURER'S RECOMMENDATIONS THAT SHOW THAT DRYING EFFECTIVELY REMOVES MOISTURE AND RESTORES ELECTRODES TO THEIR DESIGNATED DIFFUSIBLE HYDROGEN LEVELS ARE PERMITTED.
G. FCAW ELECTRODE WELDING SUSPENDED MORE THAN 8 HRS SHALL BE REMOVED FROM THE MACHINES AND STORED IN AN ELECTRODE WIRE BAKING OR STORAGE OVEN MAINTAINED AT A TEMPERATURE BETWEEN 250 DEGREES AND 550 DEGREE FAHRENHEIT, OR AS RECOMMENDED BY THE ELECTRODE MANUFACTURER.

STEEL MOMENT FRAME SPECIFICATIONS AND QUALITY ASSURANCE (CONT.)

6. PLASTIC HINGING ZONE PROTECTION
A. THE PLASTIC HINGING ZONE SHALL BE IDENTIFIED DIAGRAMMATICALLY, IN DETAILS ON THE STRUCTURAL PLANS BY THE ENGINEER OF RECORD.
B. THE ENGINEER OF RECORD AND CONTRACTOR SHALL BE RESPONSIBLE FOR REVIEWING STEEL SHOP DRAWINGS TO ENSURE COMPLIANCE. THIS SHALL BE DISCUSSED AND DOCUMENTED IN PRE-CONSTRUCTION MEETINGS.
C. THE CONTRACTOR SHALL BE RESPONSIBLE FOR DEVELOPING A PROGRAM TO ENSURE THAT ALL WORKERS ON THE PROJECT, INCLUDING THEIR SUBCONTRACTORS, ARE AWARE OF AND UNDERSTAND THIS REQUIREMENT. FAILURE TO COMPLY WITH THESE REQUIREMENTS MAY CAUSE THE REPLACEMENT OF STEEL.
D. PLASTIC HINGING ZONES SHALL BE DEFINED BY PERMANENT MARKINGS SUCH AS PAINT OR INK, PER STRUCTURAL DETAILS.
E. A NOTE, AS ILLUSTRATED IN STRUCTURAL DETAILS, SHALL BE PROMINENTLY PLACED ON THE STRUCTURAL PLANS AND THE CONSTRUCTION DOCUMENTS OF ALL TRADES.
F. WELDED, BOLTED, SCREWED, OR SHOT-IN (POWDER DRIVEN) ATTACHMENTS FOR PERIMETER EDGE ANGLES, SHEAR STUDS, EXTERIOR FACADES, PARTITIONS, DUCT WORK, PIPING, OR OTHER CONNECTIONS SHALL NOT BE PERMITTED WITHIN THE PLASTIC HINGING ZONES.
G. ANY PENETRATIONS OR DAMAGE FROM TEMPORARY WELDED ATTACHMENTS WITHIN THE PLASTIC HINGING ZONES SHALL BE REPAIRED AS REQUIRED BY THE ENGINEER OF RECORD.
H. INITIALLY, THE PLASTIC HINGING ZONE "WARNING SIGN", AS ILLUSTRATED IN STRUCTURAL DETAILS, MAY BE TEMPORARY. HOWEVER, THE TEMPORARY "WARNING SIGN" SHALL BE REPLACED BY A PERMANENT "WARNING SIGN" BEFORE PROJECTCOMPLETION. THIS SIGN AND IDENTIFICATION OF THE PLASTIC HINGING ZONE SHALL BE MAINTAINED DURING CONSTRUCTION; AND MAY REQUIRE REPAIR AFTER OPERATIONS SUCH AS FIREPROOFING.
I. SIGNS SHALL BE AFFIXED TO THE BEAM AND LOCATED WITHIN THE PLASTIC HINGING ZONE. THE CITY BUILDING INSPECTOR MAY ACCEPT ALTERNATE METHODS OF ATTACHING THE "WARNING SIGN" TO THE PLASTIC HINGING ZONE.

7. ADDITIONAL CHARPY V-NOTCH TOUGHNESS (NOT REQUIRED FOR OMF)
WELDS AT THE LOCATIONS INDICATED BELOW SHALL BE MADE WITH FILLER METAL HAVING A CVN TOUGHNESS OF 20 FT-LBF AT -20 DEGREES FAHRENHEIT AND 40 FT-LBF AT 70 DEGREES FAHRENHEIT AS DETERMINED BY TEST PROCEDURE PRESCRIBED IN THE AISC SEISMIC PROVISIONS, APPENDIX X " WELD METAL / WELDING PROCEDURE SPECIFICATION TOUGHNESS VERIFICATION TEST."
A. BEAM FLANGES TO COLUMNS,
B. SINGLE PLATE SHEAR CONNECTIONS TO COLUMNS,
C. BEAM WEBS TO COLUMNS, AND
D. COLUMN SPLICES.

8. NON-DESTRUCTIVE TESTING (NDT) REQUIREMENTS
A. THE MINIMUM NON-DESTRUCTIVE TESTING AT EACH WELD JOINTS OR PARTS SHALL BE CONDUCTED AT THE LOCATIONS AND FREQUENCIES AS SPECIFIED IN TABLE 2 AND TABLE 3 RESPECTIVELY.
B. A COPY OF EACH NDT REPORT SHALL BE PROVIDED TO THE CONTRACTOR, ENGINEER OF RECORD, DEPUTY INSPECTOR, AND CITY BUILDING INSPECTOR WITH THE FOLLOWING INFORMATION:
I. DOCUMENT THE ACCEPTED AND REJECTED WELDS, PARTS, OR JOINTS.
II. IDENTIFY THE TESTED WELD BY PIECE MARK AND LOCATION IN THE PIECE.
III. IDENTIFY THE TESTED WELD LOCATION IN THE STRUCTURE.
C. NDT TECHNICIAN SHALL PERFORM THE FOLLOWING TASKS:
I. COORDINATE THE NDT SCOPE AND SCHEDULE WITH THE DEPUTY INSPECTOR.
II. PERFORM NDT IN A TIMELY MANNER, SO AS NOT TO HINDER CONSTRUCTION WORK, AND TO DETECT WELDING PROBLEMS SOON AFTER OCCURRENCE SO THAT CORRECTIVE MEASURES WILL BE TAKEN BY THE CONTRACTOR.
III. MARK THE INSPECTED AND ACCEPTED WELDS, PARTS, AND JOINTS WITH A DISTINGQUISHING MARK O DIE STAMP.

9. DOCUMENTATIONS
THE REPORTS LISTED IN TABLE 1 SHALL BE SUBMITTED TO THE CITY BUILDING INSPECTOR.

STEEL MOMENT FRAME SPECIFICATIONS AND QUALITY ASSURANCE (CONT.)

C. WELDING PROCEDURES

1. BOTTOM BEAM FLANGE MOMENT CONNECTION WELDING
WELDING THE BOTTOM FLANGE TO THE COLUMN FLANGE SHALL BE COMPLETED IN THE FLAT WELDING POSITION WITH THE FOLLOWING SEQUENCE:
A. START WELDING FROM SIDE A (ONE SIDE OF THE BEAM) WITH A MAXIMUM 1/4 INCH THICK ROOT PASS BEYOND THE CENTER OF THE JOINT ON SIDE B (OTHER SIDE OF THE BEAM), REACHING PAST THE BEAM WEB THROUGH THE WELD ACCESS HOLE.
B. AFTER THE ARC IS INITIATED, ELECTRODE TRAVEL SHALL PROGRESS TOWARD THE EDGE OF THE SIDE A BEAM FLANGE, TERMINATING ON THE SIDE A WELD TAB.
C. THE SIDE A ROOT PASS, AND THE ROOT PASS DEPOSIT ON SIDE B, SHALL BE THOROUGHLY CLEANED TO ALLOW THE DEPUTY INSPECTOR TO VERIFY THAT THE RESULTING BEAD PROFILE IS SUITABLE FOR OBTAINING GOOD FUSION BY THE SUBSEQUENT ROOT PASS TO BE INITIATED FROM SIDE B. IF THE PROFILE IS NOT CONDUCIVE TO GOOD FUSION, THE START OF THE FIRST ROOT PASS SHALL BE GROUNDED, GOUGED, CHIPPED, OR OTHERWISE PREPARED TO ENSURE ADEQUATE PROFILE TO ACHIEVE FUSION.
D. COMPLETE THE ROOT PASS ON SIDE B BEFORE ANY OTHER WELD PASSES ARE PERFORMED.
E. THE ARC SHALL BE INITIATED AT THE START OF THE FIRST SIDE A ROOT PASS, AND ELECTRODE TRAVEL SHALL PROGRESS TOWARD THE EDGE OF THE SIDE B BEAM FLANGE, TERMINATING ON THE SIDE B WELD TAB.
F. THE ABOVE SEQUENCE SHALL BE REPEATED FOR SUBSEQUENT WELD LAYERS, AND EACH WELD LAYER SHALL BE COMPLETED ON BOTH SIDES OF THE JOINT BEFORE A NEW LAYER IS DEPOSITED. THE ORDER OF OPERATIONS (SIDE A, THEN SIDE B, OR VICE VERSA) IS NOT RESTRICTED AND MAY VARY FOR EACH WELD LAYER. WELD PASSES SHALL BE PLACED IN HORIZONTAL LAYERS. EACH PASS SHALL BE THOROUGHLY CLEANED OF SLAG AND WIRE BRUSHED. EACH PASS SHALL BE VISUALLY INSPECTED BY THE DEPUTY INSPECTOR, AS DESCRIBED ABOVE IN STEP (C).

2. SEQUENCE FOR WELDING AT MULTIPLE LOCATIONS
WHEN WELDING OCCUR AT MULTIPLE LOCATIONS OF WELDED STEEL MOMENT FRAME CONNECTIONS, THE FOLLOWING SEQUENCE SHALL BE FOLLOWED:
A. WELD BOTH TOP AND BOTTOM BEAM FLANGES PRIOR TO ANY SUPPLEMENTAL WELDING TO THE BEAM WEB OR SHEAR TAB.
B. ONLY FIELD WELDING INDICATED ON PLANS SHALL BE PERMITTED.
C. FIELD WELDING OF WEB SHEAR PLATES WITH BOLTS SHALL OCCUR AFTER FIELD WELDING OF BEAM FLANGES TO COLUMN FLANGE.
D. HIGH STRENGTH BOLTS SHALL BE IN THE SNUG TIGHT CONDITION PRIOR TO WELDING.
E. HIGH STRENGTH BOLTS SHALL BE FULLY TENSIONED UPON COMPLETION OF ALL WELDING ACTIVITIES.

3. WELDING TECHNIQUE
A. STRINGER BEADS SHALL BE USED DURING ALL WELDING OPERATIONS. MAXIMUM BEAD WIDTH, BEAD THICKNESS, AND LAYER THICKNESS SHALL BE CONSIDERED. WEAVING IS NOT PERMITTED, EXCEPT WHEN THE WPS APPROVED BY THE ENGINEER OF RECORD LIMITS ELECTRODE OSCILLATION TRANSVERSE TO THE WELD AXIS TO A MAXIMUM OF:
I. 3D FOR 1G/1F, 2G/2F, AND 4G/4F WELD POSITIONS, OR
II. 5D FOR THE 3G/3F POSITION, WHERE D = ELECTRODE DIAMETER.
B. WELDING LAYERS SHOULD PROGRESS FROM THE FACE OF THE COLUMN FLANGE OUTWARD TOWARD THE GROOVE FACE OF THE BEAM FLANGE AS ILLUSTRATED IN STRUCTURAL DETAILS.

4. PREHEAT AND INTERPASS TEMPERATURE
A. THE MINIMUM PREHEAT AND INTERPASS TEMPERATURE REQUIREMENTS IN TABLE 4 OF SHEET 2 SHALL BE OBSERVED. SPECIAL ATTENTION SHALL BE GIVEN TO AWS D1.1/D1.1M:2002 SECTION 3.5.1 AND SECTION 5.6 FOR THE THICKNESS OF THE BASE METAL TO BE WELDED.
B. PREHEAT AND ALL SUBSEQUENT INTERPASS TEMPERATURES SHALL BE MAINTAINED DURING THE WELDING OPERATION FOR A DISTANCE AT LEAST EQUAL TO THE THICKNESS OF THE THICKER WELDED PART, BUT NOT LESS THAN 3", IN ALL DIRECTIONS FROM THE POINT OF WELDING.
C. WHERE PLATES ARE OF DIFFERENT THICKNESS, THE HIGHER MINIMUM PREHEAT AND INTERPASS TEMPERATURE REQUIREMENTS OF THE THICKER PLATE SHALL GOVERN.
D. MAXIMUM PREHEAT AND INTERPASS TEMPERATURE SHALL NOT EXCEED THE LESSER OF:
I. 550 DEGREES FAHRENHEIT, OR
II. THE MAXIMUM TEMPERATURE RECOMMENDED BY THE MANUFACTURER.

5. POST WELD HEAT TREATMENT
POST WELD HEAT TREATMENT MAY REDUCE CRACKING TENDENCIES DUE TO POSSIBLE HYDROGEN EMBRITTLEMENT. POST WELD HEAT TREATMENT SHALL BE PROVIDED AS FOLLOWS:
A. APPLY HEAT IN THE 400°F TO 600°F RANGE AFTER COMPLETION OF WELDING.
B. COMPLYING WITH THE CONDITIONS OF AWS D1.1/D1.1M:2002 SECTION 3.14 AND SECTION 5.8.
C. ALTERNATIVELY, THE USE OF INSULATING BLANKETS AFTER THE COMPLETION OF WELDING IS PERMITTED TO CONTROL THE COOLING OF THE CONNECTION TO AMBIENT TEMPERATURE.

STEEL MOMENT FRAME SPECIFICATIONS AND QUALITY ASSURANCE (CONT.)

D. WELDING AND FABRICATION DETAILS

1. BASE METAL JOINT PREPARATION
A. BASE METAL PREPARATION SHALL BE IN COMPLY WITH AWS D1.1/D1.1M:2002 SECTION 5.15.
B. ALL BEAM FLANGE TO COLUMN FLANGE WELDS ARE TO BE MADE WITH AN AWS PREQUALIFIED CJP GROOVE WELDED JOINT DETAIL.
C. BEVEL, FIT-UP AND DETAIL TOLERANCES SHALL BE AS REQUIRED BY THE SELECTED PREQUALIFIED WELDED JOINT DETAIL.
D. WHENEVER POSSIBLE, USE THE AWS PREQUALIFIED CJP GROOVE WELDED JOINT PER STRUCTURAL DETAIL AND THE FOLLOWING:
I. USE SINGLE BEVEL CJP GROOVE WELDS MADE WITH A 30 DEGREES GROOVE ANGLE OR DOUBLE BEVEL CJP GROOVE WELDS WHEN FLANGE THICKNESS EXCEED 1-1/2 INCH.
II. "AS FIT-UP" AND "AS DETAILED" SHALL BE THE MAXIMUM TOLERANCES.
III. MEET ALL PREQUALIFIED WPS VARIABLES IN TABLE 5.

2. WELD ACCESS HOLE
A. WHERE WELD ACCESS HOLES ARE PROVIDED, THEY SHALL BE DETAILED AS ILLUSTRATED IN STRUCTURAL DETAILS.
B. NOTCHES AND GOUGES SHALL BE REPAIRED FOLLOWING A WPS APPROVED BY THE ENGINEER OF RECORD.
C. WELD ACCESS HOLES SHALL BE PREPARED BY GRINDING TO A SUITABLE FINISH IN ACCORDANCE WITH AISC LRFD SPECIFICATION SECTION J1.6 AND PROVIDED WITH A MINIMUM RADIUS OF 3/8 INCH AS ILLUSTRATED IN STRUCTURAL DETAILS.

3. BACKING BAR
A. BACKING BAR USED IN CONNECTIONS WITH A CJP GROOVE WELD OF BEAM FLANGE TO COLUMN FLANGE SHALL BE REMOVED EXCEPT THAT TOP FLANGE BACKING BAR ATTACHED TO THE COLUMN BY A CONTINUOUS FILLET WELD ON THE EDGE BELOW THEE CJP GROOVE WELD NEED NOT BE REMOVED.
B. FOLLOWING REMOVAL OF BACKING BAR, THE ROOT PASS SHALL BE BACKGOUGED TO SOUND WELD METAL, AND BACK WELDED. A REINFORCING FILLET WELD WITH A MINIMUM LEG SIZE OF 5/16 INCH OR THE ROOT OPENING PLUS 1/16 INCH, WHICHEVER IS LARGER, SHALL BE PROVIDED. THE REINFORCING FILLET WELD NEED NOT BE GROUNDED.
C. WHEN BACKING BAR IS OTHER THAN AWS D1.1/D1.1M:2002 TABLE 3.1 AND SECTION 5.2.2 APPROVED BASE METAL IS USED, THE FOLLOWING SHALL APPLY:
I. CERAMIC, FLUX OR GLASS TAPE MAY BE USED PROVIDED THE MANUFACTURE'S RECOMMENDATIONS ARE FOLLOWED.
II. WHEN A NON-METALLIC BACKING BAR IS USED, THE WPS AND THE WELDER SHALL BE QUALIFED USING THE TYPE OF BACKING BAR INTENDED FOR WELDING.
III. NONFERROUS METALLIC (E.G. COPPER) BACKING MATERIALS ARE NOT PERMITTED.

4. WELD TAB
A. WELD TABS SHALL BE ALIGNED PARALLEL TO THE JOINT PREPARATION.
B. NO WELD DAMS ARE ALLOWED.
C. WELD TABS SHALL EXTEND BEYOND THE EDGE OF THE JOINT A MINIMUM DISTANCE EQUAL TO THE PART THICKNESS, BUT NOT LESS THAN ONE INCH.
D. WELD TAB SHALL BE REMOVED UPON COMPLETION OF THE WELDED JOINT AS FOLLOWS:
I. NO MORE THAN 1/8 INCH BEYOND THE EDGE OF THE JOINT SHALL REMAIN, EXCEPT AT CONTINUITY PLATE WHERE UP TO 1/4 INCH IS ACCEPTABLE.
II. EDGES OF THE WELD TAB SHALL BE FINISHED TO A SURFACE ROUGHNESS VALUE OF 500 MICRO INCH OR BETTER. GRINDING TO A FLUSH CONDITION IS NOT REQUIRED.
E. GOUGES AND NOTCHES ARE NOT PERMITTED. THE TRANSITIONAL SLOPE OF ANY AREA WHERE GOUGES AND NOTCHES HAVE BEEN REMOVED SHALL NOT EXCEED 1:5.
F. MATERIAL REMOVED BY GRINDING THAT EXTENDS MORE THAN 1/16 INCH BELOW THE SURFACE OF THE BASE METAL SHALL BE FILLED WITH WELD METAL. THE CONTOUR OF THE WELD AT THE ENDS SHALL PROVIDE A SMOOTH TRANSITION, FREE OF NOTCHES AND SHARP CORNERS.

5. CONTINUITY PLATE
A. CONTINUITY PLATES SHALL BE DETAILED AS ILLUSTRATED IN STRUCTURAL DETAILS.
B. THE WELD ATTACHING THE CONTINUITY PLATE TO THE COLUMN FLANGE SHALL BE AS FOLLOWS:
I. USE A CJP GROOVE WELD FOR THE FULL LENGTH OF THE GROOVE PREPARATION.
II. WHEN BACKING BARS ARE OMITTED, THE ROOT SHALL BE BACKGOUGED AND BACK WELDED.
III. WHEN BACKING BARS ARE USED AND REMAIN IN PLACE, BACKING BARS SHALL BE ATTACHED TO THE COLUMN FLANGES WITH A REINFORCING FILLET WELD.
IV. FILLET WELD SHALL NOT BE USED TO CONNECT BACKING BARS TO CONTINUITY PLATES.
V. THE FILLET WELD SIZE NEED NOT EXCEED THE MINIMUM SIZE REQUIREMENTS OF AWS D1.1/D1.1M:2002 TABLE 5.8.
C. WELD TERMINATIONS NEAR THE END OF THE COLUMN FLANGE TIPS MAY BE COMPLETED USING WELD TABS AS FOLLOWS:
I. WELD TABS MAY BE STEEL OR NONFUSIBLE MATERIAL.
II. WELD TERMINATIONS NEAR THE RADIUS OF THE COLUMN NEED NOT BE MADE USING WELD TABS. THE USE OF SMALL NONFUSIBLE WELD TABS TO ASSIST IN WELD TERMINATIONS IS PERMITTED.
III. WELD TABS SHALL BE REMOVED FOLLOWING COMPLETION OF WELDING.
D. CONTINUITY PLATES MAY BE WELDED TO THE COLUMN WEB WITH GROOVE WELDS, FILLET WELDS, OR A COMBINATION OF THE TWO. FILLET WELDS SHALL TERMINATE A MINIMUM DISTANCE OF 1/4 INCH FROM EACH END OF THE JOINT.

E. EXEMPTIONS

1. REDUCTION FROM CERTAIN QUALITY ASSURANCE COMPONENTS OF THIS STANDARD QUALITY ASSURANCE PLAN, AS LISTED IN ITEM 2, ARE PERMITTED FOR THE FOLLOWING BUILDINGS OR STRUCTURES:
A. ONE OR TWO FAMILY DWELLINGS NOT MORE THAN 1 STORY IN HEIGHT AND FLOOR AREA,
B. BUILDINGS OR STRUCTURES ACCESSORY TO RESIDENTIAL USES (SUCH AS CARPORT, STORAGE, GARAGE), AND
C. MISCELLANEOUS STRUCTURES (SUCH AS WALKWAY, CANOPY, PATIO COVER, GAZEBO,STORAGE RACK).
2. BUILDINGS OR STRUCTURES, AS LISTED IN ITEM 1, ARE EXEMPT FROM PROVIDING THE FOLLOWING QUALITY ASSURANCE COMPONENTS:
A. ELECTRODE STORAGE AND ATMOSPHERIC EXPOSURE, ITEM 5(F) AND 5(G) OF QUALITY ASSURANCE SPECIFICATIONS.
B. PLASTIC HINGING ZONE PROTECTION, ITEM 6 OF QUALITY ASSURANCE.
C. ADDITIONAL CVN NOTCH TOUGHNESS TESTING, ITEM 7 OF QUALITY ASSURANCE.
D. NON-DESTRUCTIVE TESTING, ITEM 8 OF QUALITY ASSURANCE.
E. PREHEAT AND INTERPASS TEMPERATURE, ITEM 4 OF WELDING PROCEDURES.
F. POST WELD HEAT TREATMENT, ITEM 5 OF WELDING PROCEDURES.

PRINTED: OCTOBER 6, 2008

THE ABOVE DRAWINGS, SPECIFICATIONS, AND DESIGNS ARE THE SOLE PROPERTY OF C. W. HOWE PARTNERS INC. NO PART THEREOF SHALL BE COPIED OR USED WITH ANY OTHER WORK OTHER THAN THE SPECIFIC PROJECT FOR WHICH THEY HAVE BEEN DEVELOPED, NOR SHALL THEY BE ASSIGNED TO ANY THIRD PARTY WITHOUT THE CONSENT OF C. W. HOWE PARTNERS INC.

REVISIONS DATE

C. W. Howe Partners Inc.
Structural Engineering Consultants
3347 Motor Avenue, Suite 200 Los Angeles, CA 90034
(310) 838-0383 tel (310) 838-5380 fax www.cwhowe.com

NOT FOR CONSTRUCTION UNTIL SIGNED BY ENGINEER

CARL W. HOWE
PROFESSIONAL ENGINEER
CIVIL
No. 44773
EXP. 3/31/10
STATE OF CALIFORNIA

HOFFMAN/CASTLEMAN RESIDENCE
1445 EL BASQUE COURT
PACIFIC PALISADES, CA90272

QUALITY ASSURANCE SPECIFICATIONS FOR STEEL MOMENT FRAMES

PROJECT NUMBER : 07E04
PROJ. ENG'R/CHK. BY/DRAWN BY: NSP / / JMH
DATE : 2008
SCALE : NONE
SHEET NUMBER : S-1.1

TABLE 6B. STRUCTURAL OBSERVATION CHECKLIST

DEPUTY INSPECTOR OBSERVATION PROGRAM (STEEL MOMENT FRAME FOR SEISMIC APPLICATION)
1. REMOVAL OF BACKING BARS, AS REQUIRED ON THE PLANS & DETAILS
2. PRESENCE OF CONTINUITY PLATES, AS REQUIRED ON THE PLANS & DETAILS
3. PRESENCE OF DOUBLER PLATES, AS REQUIRED ON THE PLANS & DETAILS
4. VERIFY THAT NO WELDED ATTACHMENTS OCCUR IN THE PLASTIC HINGING REGION.
5. REVIEW NDT REPORTS FOR GENERAL COMPLIANCE.

TABLE 7. PREQUALIFIED BASE METAL - FILLER METAL COMBINATIONS FOR MATCHING STRENGTH (1, 2, 3, 4)

BASE METAL		FILLER METAL		
GROUP	STEEL SPECIFICATION	WELDING PROCESS	AWS ELECTRODE SPECIFICATION	ELECTRODE CLASSIFICATION
I	ASTM A36 < 3/4 IN.	SMAW	A5.1	E7OXX
			A5.5 (6)	E7OXX-X
		FCAW	A5.20(5)	E7OXT-X, E7XT-XM
			A5.29 (6)	E7OXTX-X, E7XTX-XM
II	ASTM A36 & 3/4 IN. ASTM A572 GRADE 50 ASTM A913 GRADE 50 ASTM A992	SMAW	A5.1	E7015, E7016, E7018, E7028
			A5.5 (6)	E7OXX-X
		FCAW	A5.20(5)	E7OXT-X, E7XT-XM
			A5.29 (6)	E7OXTX-X, E7XTX-XM
RELATIONSHIP	BASE METAL (5)	FILLER METAL STRENGTH RELATIONSHIP REQUIRED		
MATCHING	ANY STEEL TO ITSELF OR ANY STEEL TO ANOTHER IN THE SAME GROUP	ANY FILLER METAL LISTED IN THE SAME GROUP		
	ANY STEEL IN ONE GROUP TO ANY STEEL IN ANOTHER	ANY FILLER METAL LISTED FOR A LOWER STRENGTH GROUP [SMAW ELECTRODES SHALL BE THE LOW-HYDROGEN CLASSIFICATION]		
UNDER-MATCHING	ANY STEEL TO ANY STEEL TO ANY GROUP			

NOTES:

1. THE BASE METAL/FILLER METAL STRENGTH RELATIONSHIPS ABOVE SHALL BE USED TO DETERMINE WHETHER MATCHING OR UNDER-MATCHING FILLER METALS ARE REQUIRED. REFER TO AWS D1.1/D1.1M:2002, SECTION 3.3.
2. PREHEATING OF JOINTS INVOLVING BASE METALS OF DIFFERENT GROUPS SHALL BE IN CONFORMANCE WITH THE REQUIREMENTS APPLICABLE TO THE HIGHER STRENGTH GROUP.
3. WHEN WELDS ARE TO BE STRESS-RELIEVED, THE DEPOSITED WELD METAL SHALL NOT EXCEED 0.05 PERCENT VANADIUM.
4. ADAPTED WITH PERMISSION FROM THE AWS D1.1 COMMITTEE ON STRUCTURAL WELDING, STRUCTURAL WELDING CODE - STEEL, AWS D1.1/D1.1M: 2002, MIAMI: AMERICAN WELDING SOCIETY, TABLE 3.1.
5. FCAW ELECTRODES WITH THE -2, -2M, -3, -4, -7, -10, -11, -13, -14, G, -GS SUFFIX SHALL BE EXCLUDED AND ELECTRODES WITH THE -11 SUFFIX SHALL BE EXCLUDED FOR THICKNESSES GREATER THAN 1/2 IN.
6. FILLER METALS OF ALLOY GROUP B3, B3L, B4, B4L, B5, B5L, B6, B6L, B7, B7L, B8, B8L, B9, OR ANY BXH GRADE IN AWS A5.5 OR A5.29 ARE NOT PREQUALIFIED FOR USE IN THE AS-WELD CONDITION.

TABLE 5. PREQUALIFIED WPS REQUIREMENTS (1, 2, 3)

VARIABLE	POSITION OF WELD	WELD TYPE	SMAW	FCAW
MAXIMUM ELECTRODE DIAMETER	FLAT (F)	FILLET (4)	5/16 IN.	1/8 IN.
		GROOVE (4)	1/4 IN.	
		ROOT PASS	3/16 IN.	
	HORIZONTAL (H)	FILLET	1/4 IN.	1/8 IN.
		GROOVE	3/16 IN.	
	VERTICAL (V)	ALL	3/16 IN.	3/32 IN.
	OVERHEAD (OH)	ALL	3/16 IN.	5/64 IN.
MAXIMUM CURRENT	ALL	FILLET	WITHIN THE RANGE OF RECOMMENDED OPERATION BY THE FILLER METAL MANUFACTURER AND A WPS APPROVED BY ENGINEER OF RECORD.	WITHIN THE RANGE OF RECOMMENDED OPERATION BY THE FILLER METAL MANUFACTURER AND A WPS APPROVED BY ENGINEER OF RECORD.
	ALL	GROOVE WELD ROOT PASS WITH OPENING		
		GROOVE WELD ROOT PASS WITHOUT OPENING		
		GROOVE WELD FILL PASSES		
		GROOVE WELD CAP PASS		
MAXIMUM ROOT PASS THICKNESS (5)	FLAT (F)	ALL	3/8 IN.	3/8 IN.
	HORIZONTAL (H)		5/16 IN.	5/16 IN.
	VERTICAL (V)		1/2 IN.	1/2 IN.
	OVERHEAD (OH)		5/16 IN.	5/16 IN.
MAXIMUM FILL PASS THICKNESS	ALL	ALL	3/16 IN.	1/4 IN.
MAXIMUM SINGLE PASS FILLET WELD SIZE	FLAT (F)	FILLET	3/8 IN.	1/2 IN.
	HORIZONTAL (H)		5/16 IN.	3/8 IN.
	VERTICAL (V)		1/2 IN.	1/2 IN.
	OVERHEAD (OH)		5/16 IN.	5/16 IN.
MAXIMUM SINGLE PASS LAYER WIDTH	ALL	ROOT OPENING >1/2 IN.	NOT APPLICABLE.	SPLIT LAYERS
		ANY LAYER OF WIDTH W		(6)

NOTES:

1. APPLICABLE PROVISIONS OF AWS D1.1/D1.1M:2002 SECTION 3 "PREQUALIFICATION OF WPSS" MUST BE MAINTAINED FOR PREQUALIFIED STATUS OF SMAW AND FCAW WPSS.
2. REFER TO DETAIL ON SHEET FOR DIAGRAM OF WELD PASS SEQUENCE.
3. ADAPTED WITH PERMISSION FROM THE AWS D1.1 COMMITTEE ON STRUCTURAL WELDING, STRUCTURAL WELDING CODE - STEEL, AWS D1.1/D1.1M: 2002, MIAMI: AMERICAN WELDING SOCIETY, TABLE 3.7.
4. EXCEPT ROOT PASSES.
5. SEE AWS D1.1/D1.1M:2002, SECTION 3.7.2, FOR WIDTH-TO-DEPTH LIMITATIONS.
6. IN THE F, H, OR OH POSITIONS FOR NONTUBULARS, SPLIT LAYERS WHEN THE LAYER WIDTH W > 5/8 INCH. IN THE V POSITION FOR NONTUBULARS OR THE 5G OR 6G FOR TUBULARS, SPLIT LAYERS WHEN THE WIDTH W > 1 INCH.

TABLE 1. REPORTS TO BE SUBMITTED TO THE CITY BUILDING INSPECTOR

	PREPARED BY	TYPE OF REPORT
1.	STRUCTURAL OBSERVER(S)	STRUCTURAL OBSERVATION REPORTS
2.	DEPUTY INSPECTOR(S)	DEPUTY INSPECTION REPORTS
3.	NDT TECHNICIAN(S)	NON-DESTRUCTIVE TESTING REPORTS

TABLE 2. NON-DESTRUCTIVE TEST LOCATIONS

	REQUIRED LOCATIONS	OMF	IMF	SMF
1.	CJP GROOVE WELD ULTRASONIC TEST SHALL BE PERFORMED ON ALL CJP GROOVE WELDS IN MATERIALS 5/16 INCH (8 MM) THICK OR GREATER. IN ADDITION, MAGNETIC PARTICLE TEST SHALL BE PERFORMED ON ALL BEAM-TO-COLUMN CJP GROOVE WELDS.	B	A	A
2.	"K" AREA WHEN WELDING OF DOUBLER PLATES, CONTINUITY PLATES, OR STIFFENERS HAS BEEN PERFORMED IN THE K-AREA, THE WEB SHALL BE TESTED FOR CRACKS USING MAGNETIC PARTICLE TESTING. THE MAGNETIC PARTICLE TEST AREA SHALL INCLUDE THE K-AREA BASE METAL WITHIN 3 IN. (75 MM) OF THE WELD.	C	B	B
3.	BEAM COPE AND ACCESS HOLE AT WELDED SPLICES AND CONNECTIONS, THERMALLY CUT SURFACES OF BEAM COPES AND ACCESS HOLES SHALL BE TESTED USING MAGNETIC PARTICLE TESTING, WHEN THE FLANGE THICKNESS EXCEEDS 1-1/2 IN. (38 MM) FOR ROLLED SHAPES.	C	B	B
4.	REDUCED BEAM SECTION REPAIR MAGNETIC PARTICLE TESTING SHALL BE PERFORMED ON ANY WELD AND ADJACENT AREA OF THE RBS PLASTIC HINGE REGION THAT HAS BEEN REPAIRED BY WELDING, OR ON THE BASE METAL OF THE RBS PLASTIC HINGE REGION IF A SHARP NOTCH HAS BEEN REMOVED BY GRINDING.	B	B	A
5.	BASE METAL LAMELLAR TEARING AND LAMINATIONS AT CJP GROOVE WELD BASE METAL THICKER THAN 1-1/2 IN. (38 MM) SHALL BE ULTRASONICALLY TESTED FOR DISCONTINUITIES BEHIND AND ADJACENT TO THE FUSION LINE WHEN THE BASE METAL IS LOADED IN TENSION IN THE THROUGH THICKNESS DIRECTION IN TEE AND CORNER JOINTS AND THE CONNECTED MATERIAL IS GREATER THAN 3/4 IN. (19 MM). ANY BASE METAL DISCONTINUITIES FOUND WITHIN 7/4 OF THE STEEL SURFACE SHALL BE ACCEPTED OR REJECTED ON THE BASIS OF CRITERIA OF AWS D1.1 TABLE 6.2, WHERE T IS THE THICKNESS OF THE PART SUBJECTED TO THE THROUGH-THICKNESS STRAIN.	B	B	A
6.	END OF WELD AT WELD TAB REMOVAL SITE MAGNETIC PARTICLE TESTING SHALL BE PERFORMED ON THE END OF WELDS FROM WHICH THE WELD TABS HAVE BEEN REMOVED, EXCEPT FOR CONTINUITY PLATE WELD TABS.	C	B	B
7.	PJP GROOVE WELD ULTRASONIC TESTING SHALL BE PERFORMED ON PJP GROOVE WELDS USED IN COLUMN SPLICES WITH AN EFFECTIVE THROAT OF 3/4 IN. (19.1 MM) THICK OR GREATER.	C	B	A

NOTE: A, B, AND C ARE THE FREQUENCIES OF NON-DESTRUCTIVE TESTS LISTED IN TABLE 9. OMF, IMF OR SMF CONNECTION NOTED IN STRUCTURAL DETAILS

TABLE 3. NON-DESTRUCTIVE TEST FREQUENCY

	FREQUENCY DESIGNATION		
	A	B	C
ULTRASONIC TESTING (UT)	100% OF JOINTS	50% OF JOINTS	25% OF JOINTS
MAGNETIC PARTICLE TESTING (MT)	50% OF JOINTS	25% OF JOINTS	NOT REQUIRED

NOTES:

1. REFER TO TABLE 2 FOR LOCATIONS OF NON-DESTRUCTIVE TESTING.
2. RATE OF NON-DESTRUCTIVE TESTING MAY BE REDUCED AS PERMITTED IN SHEET 1, PART IV, ITEM 8(D).

TABLE 6A. DEPUTY INSPECTOR OBSERVATION CHECKLIST

DEPUTY INSPECTOR OBSERVATION PROGRAM (STEEL MOMENT FRAME FOR SEISMIC APPLICATION)
1. REMOVAL OF BACKING BARS, AS REQUIRED ON THE PLANS & DETAILS
2. REMOVAL OF RUNOFF TABS, AS REQUIRED ON THE PLANS & DETAILS
3. PRESENCE OF CONTINUITY PLATES, AS REQUIRED ON THE PLANS & DETAILS
4. PRESENCE OF DOUBLER PLATES, AS REQUIRED ON THE PLANS & DETAILS
5. CONFIGURATION AND FINISH OF WELD ACCESS HOLES, IF APPLICABLE.
6. CONTOUR OF RBS PROFILE, IF APPLICABLE.
7. VERIFY THAT NO WELDED ATTACHMENTS OCCUR IN THE PLASTIC HINGING REGION.
8. REVIEW NDT REPORTS FOR GENERAL COMPLIANCE.

NOTES:

1. WELD QUALITIES SHALL BE VERIFIED BY THE DEPUTY INSPECTOR.
2. THE OBSERVATIONS LISTED IN THIS TABLE ARE IN ADDITION TO THE OBSERVATIONS THAT MAY BE REQUIRED ON THE STRUCTURAL PLANS.

TABLE 4. PREQUALIFIED MINIMUM PREHEAT AND INTERPASS TEMPERATURE

STEEL SPECIFICATION	WELDING PROCESS	THICKNESS OF THICKEST PART AT POINT OF WELDING (IN.)	MINIMUM PREHEAT AND INTERPASS TEMPERATURE (°F)
ASTM A36 ASTM A572 GRADE 50 ASTM A913 GRADE 50 ASTM A992	SMAW WITH LOW-HYDROGEN ELECTRODES, FCAW	1/8 TO 3/4 INCL.	32
		OVER 3/4 TO 1-1/2 INCL.	50
		OVER 1-1/2 TO 2-1/2 INCL.	150
		OVER 2-1/2	225

NOTES:

1. SURFACES TO BE WELDED AND SURFACES ADJACENT TO WELDS SHALL BE FREE OF MOISTURE PURSUANT TO AWS D1.1/D1.1M:2002 SECTION 5.15. USE A HIGHER PREHEAT TEMPERATURE FROM THIS TABLE TO REMOVE MOISTURE.
2. ADAPTED WITH PERMISSION FROM THE AWS D1.1 COMMITTEE ON STRUCTURAL WELDING, STRUCTURAL WELDING CODE - STEEL, AWS D1.1/D1.1M: 2002, MIAMI: AMERICAN WELDING SOCIETY, TABLE 3.2.

REVISIONS DATE

C. W. Howe Partners Inc.
Structural Engineering Consultants
3347 Motor Avenue, Suite 200 Los Angeles, CA 90034
(310) 838-0383 tel (310) 838-3380 fax www.cwhowe.com

NOT FOR CONSTRUCTION UNTIL SIGNED BY ENGINEER

CARL W. HOWE
PROFESSIONAL ENGINEER
CIVIL
No. 44773
EXP. 3/31/10
STATE OF CALIFORNIA

HOFFMAN/CASTLEMAN RESIDENCE
1445 EL BASQUE COURT
PACIFIC PALISADES, CA 90272

QUALITY ASSURANCE SPECIFICATIONS FOR STEEL MOMENT FRAMES

PROJECT NUMBER : 07E04
PROJ. ENGR./CHK. BY/DRAWN BY: NSP/ / JMH
DATE : 2008
SCALE : NONE
SHEET NUMBER : S-1.2

THE ABOVE DRAWINGS, SPECIFICATIONS AND DESIGNS ARE THE SOLE PROPERTY OF C. W. HOWE PARTNERS INC. NO PART THEREOF SHALL BE COPIED OR USED WITH ANY OTHER WORK OTHER THAN THE SPECIFIC PROJECT FOR WHICH THEY HAVE BEEN DEVELOPED, NOR SHALL THEY BE ASSIGNED TO ANY THIRD PARTY WITHOUT THE CONSENT OF C. W. HOWE PARTNERS INC.

PRINTED: OCTOBER 6, 2008

THE ABOVE DRAWINGS, SPECIFICATIONS, AND DESIGNS ARE THE SOLE PROPERTY OF C. W. HOWE PARTNERS INC. NO PART THEREOF SHALL BE COPIED OR USED WITH ANY OTHER WORK OTHER THAN THE SPECIFIC PROJECT FOR WHICH THEY HAVE BEEN DEVELOPED, NOR SHALL THEY BE ASSIGNED TO ANY THIRD PARTY WITHOUT THE CONSENT OF C. W. HOWE PARTNERS INC.

STRUCTURAL OBSERVATION (CONTINUED)

REPETITIVE CONSTRUCTION FOR SINGLE-FAMILY WOOD FRAMED STRUCTURES: THE STRUCTURAL OBSERVER OF RECORD MAY REQUEST A REDUCTION IN THE SCOPE OF STRUCTURAL OBSERVATION FOR ANY REPEATED SINGLE-FAMILY DETACHED WOOD FRAME STRUCTURE. ADMIINISTRATIVE APPROVAL WILL BE CONSIDERED FOR ALTERNATIVE QUALITY CONTROL PROGRAMS THAT MEET THE FOLLOWING MINIMUM REQUIREMENTS.

THE STRUCTURE SHALL BE REPEATED A MINIMUM OF THREE TIMES. REPETITIVE STRUCTURES ALSO INCLUDE REVERSED FLOOR PLANS AND ALLOW NON-STRUCTURAL CHANGES IN EXTERIOR ELEVATIONS.

1. THE DEPARTMENT DETERMINES THAT THE REPEATED STRUCTURE IS NOT UNUSUAL IN ITS SIZE, SHAPE OR ORIENTATION.
2. THE PERSONNEL RESPONSIBLE FOR THE CONSTRUCTION FOR THE OWNER, CONTRACTOR, AND SUBCONTRACTORS SHALL REMAIN CONSTANT DURING THE PHASE OR PHASES OF CONSTRUCTION CONSIDERED.
3. THE BUILDING INSPECTOR SHALL ATTEND ANY PRE-CONSTRUCTION MEETINGS.
4. THE STRUCTURAL OBSERVER SHALL FULLY OBSERVE THE INITIAL STRUCTURE IN ANY REPEATED GROUP.
5. THE STRUCTURAL OBSERVER SHALL MAKE A FINAL OBSERVATION VISIT AND REPORT FOR EACH STRUCTURE AFTER ANY MECHANICAL PENETRATIONS ARE IN PLACE AND BEFORE APPROVAL OF THE ROUGH FRAMING AND COVERING OF THE WORK.
6. THE REPEATED CONSTRUCTION DOES NOT RESULT IN DEFICIENT CRITICAL ELEMENTS OR THEIR CONNECTIONS, WHICH WOULD NORMALLY BE REPORTED UNDER FULL STRUCTURAL OBSERVATION.

INSPECTION BY BUILDING INSPECTOR: GENERALLY, TO OBTAIN L.A.D.B.S. INSPECTION APPROVAL AT EACH CONSTRUCTION STAGE, A STRUCTURAL OBSERVATION REPORT FORM IS REQUIRED STATING THAT THERE WERE NO DEFICIENCIES, OR A DEPUTY INSPECTION REPORT FORM B-94 IS REQUIRED STATING THAT ANY DEFICIENCY NOTED IN THE STRUCTURAL OBSERVATION REPORT FORM HAS BEEN CORRECTED.

CONSTRUCTION STAGES / ELEMENTS TO BE OBSERVED:

A. FOUNDATIONS: REINFORCEMENT, ANCHOR BOLT PLACEMENT
B. FRAMING AND DECKING: STRUCTURAL STEEL FRAMING AND DECKING

SPECIAL INSPECTION

IN ADDITION TO THE REGULAR INSPECTIONS, THE FOLLOWING CHECKED ITEMS WILL ALSO REQUIRE SPECIAL INSPECTION IN ACCORDANCE WITH SEC. 1701 OF THE UNIFORM BUILDING CODE

1. SOILS COMPLIANCE PRIOR TO FOUNDATION INSPECTION
2. STRUCTURAL CONCRETE OVER 2500 PSI
3. FIELD WELDING
4. MOMENT FRAME CONNECTIONS

NAME(S) OF INDIVIDUAL(S) OR FIRM(S) RESPONSIBLE FOR THE SPECIAL INSPECTIONS LISTED ABOVE:

A.______________________________
(BY ARCHITECT/OWNER)

B.______________________________
(BY ARCHITECT/OWNER)

DUTIES OF THE SPECIAL INSPECTORS FOR THE WORK LISTED ABOVE:

A. VERIFY THAT ITEMS NOTED ABOVE ARE IN ACCORDANCE WITH DETAILS AND SPECIFICATIONS INDICATED ON THE STRUCTURAL DRAWING.

B. VERIFY THAT ITEMS NOTED ABOVE CONFORM WITH THE STANDARDS DESIGNATED BY THE UNIFORM BUILDING CODE AND ALL OTHER REQUIREMENTS SPECIFIED BY THE CITY.

Los Angeles Regional Uniform Code Program
Committee I-3: Structural Observation

STRUCTURAL OBSERVATION PROGRAM AND DESIGNATION OF THE STRUCTURAL OBSERVER

PROJECT ADDRESS: 1445 El Basque Court PERMIT APPL. NO.: ___________

Description of Work: New 2-Story Residence

Owner: Hoffman / Castleman Architect: Steven Ehrlich Arch. Engineer: C. W. Howe Partners Inc.

STRUCTURAL OBSERVATION
(only checked items are required)

Firm or Individual to be responsible for the Structural Observation:

Name: C. W. Howe Associates Phone: (310) 838-0383 Calif. Registration: 44773

FOUNDATION	WALL	FRAME	DIAPHRAGM
☒ Footing, Stem Walls, Piers	☐ Concrete	☒ Steel Moment Frame	☐ Concrete
☐ Mat Foundation	☐ Masonry	☐ Steel Braced Frame	☒ Steel Deck
☐ Caisson, Piles, Grade Beams	☐ Wood	☐ Concrete Moment Frame	☐ Wood
☐ Stepping, Retaining Foundation Hillside Special Anchors	☐ Others:	☐ Masonry Wall Frame	☐ Others:
☐ Others:		☐ Others:	

DECLARATION BY OWNER

I, the Owner of the project, declare that the above listed firm or individual is hired by me to be the Structural Observer.

Signature Date

DECLARATION BY ARCHITECT OR ENGINEER OF RECORD
(required if the Structural Observer is different from the Architect or Engineer of Record)

I, the Architect or Engineer of record for the project, declare that the above listed firm or individual is designated by me to be responsible for the Structural Observation.

Signature License Number Date

EARTHQUAKE DESIGN DATA

1. SEISMIC IMPORTANCE FACTOR, I = 1.0
2. OCCUPANCY CATEGORY = 2
3. MAPPED SPECTRAL RESPONSE ACCELERATIONS
   S_S = 1.544
   S_1 = 0.6
4. SITE CLASS = D
5. SPECTRURAL RESPONSE COEFFICIENT
   S_{DS} = 1.03
   S_{D1} = 0.60
6. SEISMIC DESIGN CATEGORY = D
7. BASIC SEISMIC FORCE RESISTING SYSTEM = SPECIAL STEEL MOMENT FRAME
8. DESIGN BASE SHEAR = 26.09 PSF
9. TOTAL WEIGHT OF BUILDING = 700 KIPS
10. SEISMIC RESPONSE COEFFICIENT, C_S = 0.129
11. RESPONSE MODIFICATION FACTOR, R = 8.0
12. ANALYSIS PROCEDURE USED = RIGID DIAPHRAGM ANALYSIS
13. REDUNDANCY FACTOR USED = 1.3

STRUCTURAL OBSERVATION

I. INTRODUCTION

THIS INFORMATION BULLETIN STIPULATES THE DEPARTMENT'S POLICY AND PROCEDURE IN REGARDS TO STRUCTURAL OBSERVATION AS MANDATED BY LOS ANGELES MUNICIPAL CODE (LAMC) SECTION 91.1702, AND DESCRIBES THE RESPONSIBILITY OF ALL PARTIES INVOLVED IN COMPLIANCE WITH STRUCTURAL OBSERVATION.

STRUCTURAL OBSERVATION IS INTENDED TO ASSIST AND SUPPLEMENT THE WORK OF THE BUILDING INSPECTOR. STRUCTURAL OBSERVATION BY ITSELF DOES NOT CERTIFY, GUARANTEE OR ENSURE CONFORMANCE WITH ALL OF THE SPECIFIC REQUIREMENTS OF THE APPROVED PLANS. IT DOES NOT PROVIDE THE QUALITY ASSURANCE OF CONTINUOUS INSPECTIONS BY THE BUILDING INSPECTOR OR DEPUTY INSPECTOR.

THE REQUIREMENT FOR HAVING A REGISTERED ENGINEER OR LICENSED ARCHITECT PRESENT DURING KEY CONSTRUCTION PHASES PROVIDES AN ADDITIONAL OBSERVATION OF THE GRAVITY AND/OR LATERAL LOAD STRUCTURAL SYSTEMS BY A KNOWLEDGEABLE OBSERVER. THIS WILL SUBSTANTIALLY INCREASE THE LIKELIHOOD THAT THE STRUCTURAL SYSTEM WILL BE IN GENERAL CONFORMANCE WITH THE APPROVED PLANS BY TRACKING THE LOAD PATHS TO PREVENT GROSS ERRORS AND OMISSIONS.

II. DEFINITION

STRUCTURAL OBSERVATION IS THE VISUAL OBSERVATION OF THE STRUCTURAL SYSTEM, FOR GENERAL CONFORMANCE TO THE APPROVED PLANS AND SPECIFICATIONS, AT SIGNIFICANT CONSTRUCTION STAGES AND AT COMPLETION OF THE STRUCTURAL SYSTEM. THE STRUCTURAL SYSTEM INCLUDES THE LATERAL AND/OR GRAVITY LOAD PATHS.

STRUCTURAL OBSERVATION REQUIRED BY LAMC 91.1702, SHALL BE PERFORMED BY THE ENGINEER OR ARCHITECT RESPONSIBLE FOR THE STRUCTURAL DESIGN, OR A REGISTERED ENGINEER OR LICENSED ARCHITECT DESIGNATED BY THE ENGINEER OR ARCHITECT RESPONSIBLE FOR THE STRUCTURAL DESIGN.

III. PROJECTS REQUIRING STRUCTURAL OBSERVATION

STRUCTURAL OBSERVATION IS REQUIRED FOR ALL STRUCTURES IN SEISMIC ZONE 4 WHEN A STRUCTURAL DESIGN IS PERFORMED BY A REGISTERED ENGINEER OR LICENSED ARCHITECT.

LAMC SECTION 91.1702 SPECIFICALLY REQUIRES STRUCTURAL OBSERVATION AS FOLLOWS:

1. THE STRUCTURE IS DEFINED IN TABLE 16-K OF THE LOS ANGELES BUILDING CODE (LABC) AS OCCUPANCY CATEGORY 1, 2 OR 3.
2. THE STRUCTURE IS REQUIRED TO COMPLY WITH SECTION 403 OF LABC.
3. THE STRUCTURE IS IN SEISMIC ZONE 4 AND A LATERAL DESIGN IS REQUIRED FOR THE ENTIRE STRUCTURE,

EXCEPTION: ONE- AND TWO-STORY, WOOD-FRAMED GROUP R, DIVISION 3 AND GROUP U OCCUPANCIES, LESS THAN 1,500 SQUARE FEET, AND ONE-AND TWO-STORY GROUPS B,F, M AND S OCCUPANCIES WITH AN OCCUPANT LOAD LESS THAN 10 PROVIDED THE ADJACENT GRADE IS NOT STEEPER THAN 1 UNIT VERTIVAL IN 10 UNITS HORIZONTAL (10% SLOPE).

4. WHEN REQUIRED BY THE ARCHITECT OR ENGINEER OF RECORD, OR
5. WHEN SUCH OBSERVATION IS SPECIFICALLY REQUIRED BY THE BUILDING OFFICIAL. STRUCTURES FALLING UNDER THIS CATEGORY SHALL INCLUDE, BUT ARE NOT LIMITED TO:

A. RETAINING OR FREE STANDING WALLS GREATER THAN 8 FEET IN HEIGHT.
B. LARGE SIGNS.
C. STORAGE RACKS OVER 10 FEET IN HEIGHT.
D. SWIMMING POOLS NOT COVERED BY A LOS ANGELES CITY STANDARD PLAN.

IV. DOCUMENTING STRUCTURAL OBSERVATION REQUIREMENT

PRIOR TO THE ISSUANCE OF A BUILDING PERMIT, THE ARCHITECT OR ENGINEER RESPONSIBLE FOR THE DESIGN OF THE BUILDING OR STRUCTURE SHALL SPECIFY STRUCTURAL OBSERVATION AT EACH CONSTRUCTION STAGE IDENTIFIED IN LAMC 91.108 ON THE L.A.D.B.S./L.A.R.U.C.P. "STRUCTURAL OBSERVATION REPORT" FORM. THIS FORM SHALL BE MADE A PART OF THE APPROVED PLANS. IN ADDITION, FOR REPETITIVE WORK INVOLVING SIMILAR OR IDENTICAL CONSTRUCTION, I.E., FLOOR CONSTRUCTION AT MULTI-STORY BUILDINGS, THE ARCHITECT OR ENGINEER SHALL SPECIFY THE LOCATION AND/OR FREQUENCY OF STRUCTURAL OBSERVATION REQUIRED THEREIN ON THE PLAN. SEE ALSO SECTION UNDER "REPETITIVE CONSTRUCTION FOR SINGLE-FAMILY WOOD-FRAMED STRUCTURES".

THE INDIVIDUAL OR FIRM RESPONSIBLE FOR PERFORMING THE STRUCTURAL OBSERVATION SHALL BE EMPLOYED BY THE OWNER, AND THIS INFORMATION SHALL BE SPECIFIED ON THE "STRUCTURAL OBSERVATION REPORT" FORM. SUCH INDIVIDUAL OR FIRM MAY BE CALLED THE "STRUCTURAL OBSERVER OF RECORD" FOR THE PROJECT. THE STRUCTURAL OBSERVER OF RECORD MUST MEET THE FOLLOWING THREE CONDITIONS:

1. THE STRUCTURAL OBSERVER MUST BE A PERSON OR FIRM REGISTERED IN CALIFORNIA TO PRACTICE ENGINEERING OR ARCHITECTURE.
2. THE STRUCTURAL OBSERVER MUST HAVE A DIRECT CONTRACTURAL RELATIONSHIP WITH THE OWNER TO PROVIDE THE STRUCTURAL OBSERVATION SERVICE.
3. THE STRUCTURAL OBSERVER MUST BE EITHER THE ENGINEER OR ARCHITECT OF RECORD FOR THE STRUCTURAL DESIGN, OR ANOTHER ENGINEER OR ARCHITECT DESIGNATED BY THE ENGIINEER OR ARCHITECT OF RECORD.

NOTE: THE PERSON WHO ACTUALLY PERFORMS STRUCTURAL OBSERVATION IN THE FIELD MAY BE EITHER THE STRUCTURAL OBSERVER OF RECORD, OR AN ENGINEER (REGISTERD) OR ARCHITECT (LICENSED) UNDER THE RESPONSIBLE CHARGE OF THE STRUCTURAL OBSERVER OF RECORD.

V. EXECUTION OF STRUCTURAL OBSERVATION

PRE-CONSTRUCTION MEETING: THE OWNER OR OWNER'S REPRESENTATIVE SHALL ARRANGE A PRECONSTRUCTION MEETING TO BE ATTENDED BY THE ENGINEER OR ARCHITECT RESPONSIBLE FOR THE STRUCTURAL DESIGN, STRUCTURAL OBSERVER, CONTRACTOR, AFFECTED SUBCONTRACTORS, DEPUTY INSPECTORS, AND THE BUILDING INSPECTOR. AS A MINIMUM, TELECONFERENCED MEETINGS BETWEEN VARIOUS PARTIES ARE TO BE HELD BEFORE THE START OF CONSTRUCTION. THE PURPOSE OF THE MEETING, AMONG OTHERS, IS TO REVIEW THE APPROVED PLANS AND TO MUTUALLY AGREE UPON THE SCOPE AND FREQUENCY OF STRUCTURAL OBSERVATION REQUIRED FOR THE PROJECT. A RECORD OF THE MEETING SHALL BE INCLUDED IN THE FIRST REPORT SUBMITTED TO THE BUILDING OFFICIAL.

PERFORMING STRUCTURAL OBSERVATION AND SUBMISSION OF STRUCTURAL OBSERVATION REPORTS: THE STRUCTURAL OBSERVER SHALL PERFORM STRUCTURAL OBSERVATION IN ACCORDANCE WITH THE STRUCTURAL OBSERVATION REPORT FORM AND THE APPROVED PLANS. UPON COMPLETION OF STRUCTURAL OBSERVATION AT EACH CONSTRUCTION STAGE, THE STRUCTURAL OBSERVER OF RECORD SHALL COMPLETE THE L.A.D.B.S./L.A.R.U.C.P. STRUCTURAL OBSERVATION FORM.

WHEN A DEFICIENCY IS NOTED, THE FORM SHALL BE GIVEN TO THE CONTRACTOR, OWNER'S REPRESENTATIVE, SPECIAL INSPECTOR, AND BUILDING INSPECTOR. THE STRUCTURAL OBSERVER SHALL NOTE ON THE FORM WHETHER THE CORRECTION OF THE DEFICIENCY NEEDS TO BE VERIFIED THROUGH RE-OBSERVATION BY HIM OR HER, OR AT THE DISCRETION OF THE STRUCTURAL OBSERVER. THE FORM MAY BE SUBSTANTIATED BY A REGISTERED DEPUTY INSPECTOR IN THE FORM OF A DEPUTY INSPECTION REPORT FORM B-94.

A LICENSED ENGINEER OR REGISTERED ARCHITECT, WHO WORKS UNDER THE SUPERVISION OF THE STRUCTURAL OBSERVER OF RECORD AND ACTUALLY PERFORMS THE OBSERVATION, MAY FILL OUT A REPORT NOTING ANY OBSERVED DEFICIENCIES. THAT PERSON'S NAME AND REGISTRATION NUMBER SHALL BE NOTED IN THE REPORT. THE REPORT SHALL BE REVIEWED, COMPLETED, STAMPED AND SIGNED BY THE STRUCTURAL OBSERVER OF RECORD, WHO TAKES RESPONSIBILITY FOR THE REPORT.

THE STRUCTURAL OBSERVER SHALL SUBMIT A FINAL OBSERVATION REPORT UPON COMPLETION OF THE STRUCTURAL SYSTEM. THE REPORT MUST STATE THAT THE STRUCTURAL SYSTEM GENERALLY CONFORMS WITH THE APPROVED PLANS AND SPECIFICATIONS, AND THAT ALL OBSERVED DEFICIENCIES HAVE BEEN CORRECTED. NO FINAL APPROVAL OR ACCEPTANCE OF THE STRUCTURAL WORK BY THE DEPARTMENT WILL OCCUR WITHOUT THIS FINAL REPORT.

PRINTED: OCTOBER 6, 2008

REVISIONS DATE

C. W. Howe Partners Inc.
Structural Engineering Consultants
3347 Motor Avenue, Suite 200 Los Angeles, CA 90034
(310) 838-0383 tel (310) 838-5380 fax www.cwhowe.com

NOT FOR CONSTRUCTION UNTIL SIGNED BY ENGINEER

CARL W. HOWE
PROFESSIONAL ENGINEER
CIVIL
No. 44773
EXP. 3/31/10
STATE OF CALIFORNIA

HOFFMAN/CASTLEMAN RESIDENCE
1445 EL BASQUE COURT
PACIFIC PALISADES, CA90272

GENERAL NOTES AND SPECIFICATIONS

PROJECT NUMBER : 07E04
PROJ. ENG'R. / CHK'D / DRAWN: NSP / / JMH
DATE : 2008
SCALE : NONE
SHEET NUMBER : S-1.3

PAD SCHEDULE		
SYMBOL	SIZE	BOTT. STEEL
1	9'-0" x 9'-0" x 30" THICK	9 - #7 EA. WAY
2	7'-6" x 7'-6" x 30" THICK	8 - #7 EA. WAY
3	6'-6" x 6'-6" x 24" THICK	7 - #6 EA. WAY
4	5'-0" x 5'-0" x 18" THICK	6 - #6 EA. WAY
5	4'-0" x 4'-0" x 18" THICK	4 - #5 EA. WAY
6	3'-6" x 3'-6" x 18" THICK	4 - #5 EA. WAY
7	2'-6" x 2'-6" x 12" THICK	3 - #5 EA. WAY
NOTES: f'c = 2,500 PSI, Fy = 60,000 PSI		

BASE PLATE SCHEDULE			
COLUMN SECTION	BASE PLATE	ANCHOR BOLTS	COLUMN TO PLATE WELDING "F"
W14x132	20"x20"x1-1/4" THK	6 - 1"ϕ A.B.	1/2"
W14x74	20"x16"x1" THK	4 - 3/4"ϕ A.B.	3/8"
W14x68	20"x16"x1 THK	4 - 3/4"ϕ A.B.	3/8"
W14x48	20"x14"x3/4" THK	4 - 3/4"ϕ A.B.	1/4"
TS 10x10x1/2"	16"x16"x3/4" THK	4 - 1"ϕ A.B.	3/8"
TS 5x5x1/2"	11"x11"x5/8" THK	4 - 5/8"ϕ A.B.	1/4"
TS 5x5x1/4"	11"x11"x5/8" THK	4 - 5/8"ϕ A.B.	3/16"
TS 6x3x1/4"	12"x6"x5/8" THK	4 - 5/8"ϕ A.B.	3/16"
TS 3x3x1/4"	6"x6"x5/8" THK	4 - 1/2"ϕ A.B.	3/16"
SEE DETAILS 1/S-5, 5/S-5, 7/S-5, 14/S-5, 18/S-5 FOR REFERENCE			

GRADE BEAM SCHEDULE					
BEAM	WIDTH	DEPTH	TOP STEEL	BOTT. STEEL	TIES
1	30"	30"	4 - #8 BARS	4 - #8 BARS	#4 @ 6" O.C.
2	24"	24"	2 - #7 BARS	2 - #7 BARS	#4 @ 6" O.C.
NOTES: f'c = 3,000 PSI, Fy = 60,000 PSI; f'c = 3,000 PSI W/ SPECIAL INSPECTION. A706 REINFORCING STEEL SHALL BE USED					

FOUNDATION NOTES:

1. ⬡ PAD FOOTING INDICATOR - SEE PAD SCHEDULE FOR SIZE AND REINFORCEMENT.
2. ▢ GRADE BEAM INDICATOR - SEE GRADE BEAM SCHEDULE FOR SIZE AND REINFORCEMENT.
3. ○ CAISSON INDICATOR - SEE CAISSON SCHEDULE FOR SIZE AND REINFORCEMENT.
4. REFER TO THE ARCHITECTURAL DRAWINGS FOR ALL DIMENSIONS, SLAB DEPRESSIONS, CURBS AND ELEVATIONS.
5. ALL COPING, STEPS, DRAINAGE & FINISHES PER OTHERS.
6. ALL FOUNDATION AND DEEPENED FOOTING EXCAVATIONS TO BE OBSERVED AND APPROVED BY SOIL ENGINEER FROM GEOSOILS CONSULTANTS PRIOR TO PLACEMENT OF REINFORCING STEEL.
7. EXCAVATIONS SHALL BE MADE IN COMPLIANCE WITH CAL/OSHA REGULATIONS.
8. BEARING MATERIAL IS EXISTING CERTIFIED COMPACTED FILL. MINIMUM ALLOWABLE BEARING PRESSURE IS 1,500 PSF. MINIMUM EMBEDMENT DEPTH IS 36 INCHES. ALL FOUNDATION TO BE BEARED IN EXISTING CERTIFIED COMPACTED FILL.
9. SOIL ENGINEER FROM GEOSOILS CONSULTANTS TO REVIEW AND APPROVE THESE PLANS BEFORE RECEIVING PERMIT. SOIL ENGINEER TO SIGN THESE PLANS TO VERIFY COMPLIANCE WITH THE SOIL REPORT RECOMMENDATIONS.
10. SOIL REPORT BY GEOSOILS CONSULTANTS #NO. 5761 DATED AUGUST 31, 2005 IS CONSIDERED A PART OF THESE PLANS. GEOSOILS CONSULTANTS IS LOCATED AT 6634 VALJEAN AVE. VAN NUYS, CA 91406 TEL: (818) 785-2158
11. SLAB ON GRADE:
    6" CONCRETE SLAB W/ #4 @ 12" O.C. EA. WAY
    OVER 1" SAND, OVER 6 MIL VISQUEEN OVER 1" SAND.
    f'c = 2500 psi
    Fy = 40,000 psi
12. CONTINUOUS SPECIAL INSPECTION IS REQUIRED FOR MIXING AND PLACING OF CONCRETE FOR SLAB.
13. DEPTH OF THE PEDESTAL TO BE DETERMINED BY SOIL ENGINEER TO MEET H/3 SETBACK REQUIREMENTS PER 4/S-5. SEE SHEET S-5 FOR REFERENCE.
14. ALL FOUNDATION TO BE BEARED IN EXISTING CERTIFIED COMPACTED FILL.

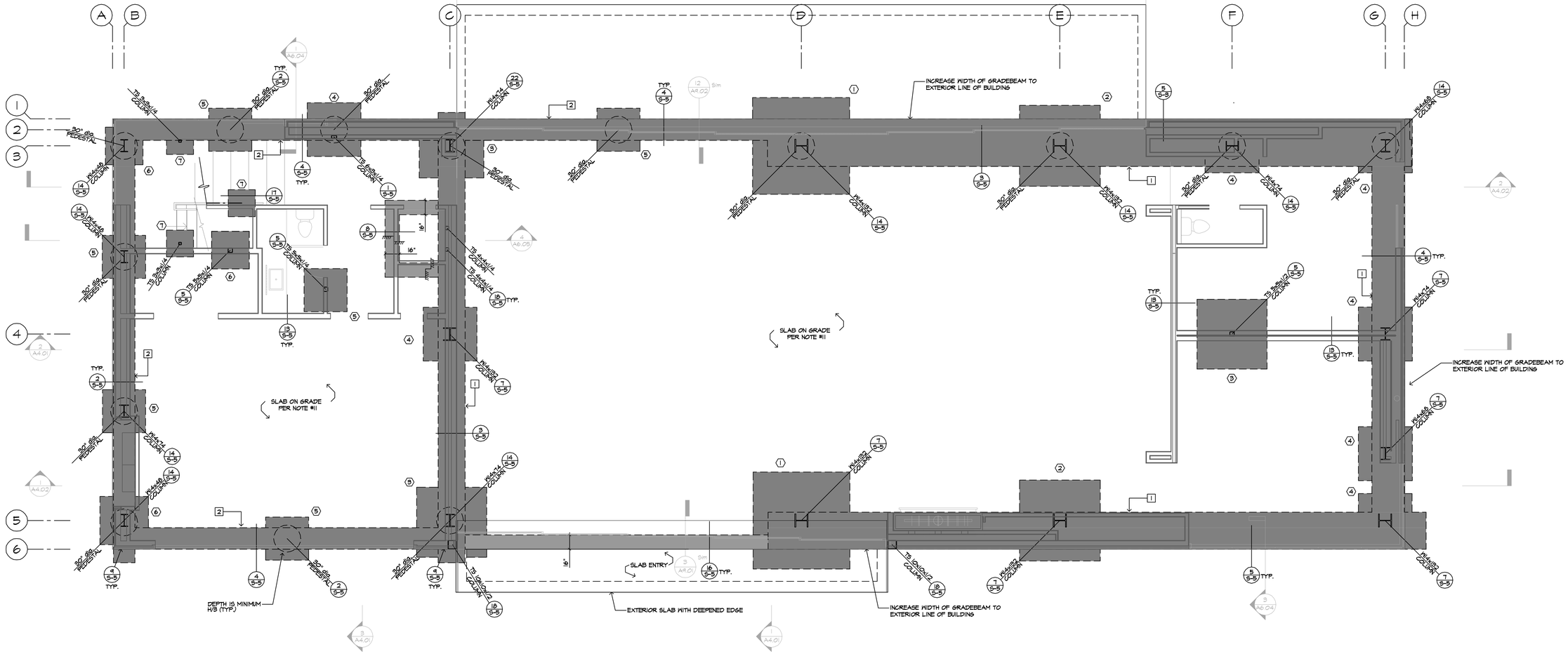

FOUNDATION PLAN

REVISIONS DATE

C. W. Howe Partners Inc.
Structural Engineering Consultants
3347 Motor Avenue, Suite 200 Los Angeles, CA 90034
(310) 838-0383 Tel (310) 838-5380 Fax www.cwhowe.com

NOT FOR CONSTRUCTION UNTIL SIGNED BY ENGINEER
CARL W. HOWE
PROFESSIONAL ENGINEER
CIVIL
No. 44773
EXP. 3/31/10
STATE OF CALIFORNIA

HOFFMAN/CASTLEMAN RESIDENCE
14445 EL BASQUE COURT
PACIFIC PALISADES, CA 90272

FOUNDATION PLAN

PROJECT NUMBER: 07E04
PROJ. ENG'R. / CHK'D / DRAWN: NSP / / DAJ
DATE: 2009
SCALE: 1/4" = 1'-0"
SHEET NUMBER: S-2

THE ABOVE DRAWINGS, SPECIFICATIONS AND DESIGNS ARE THE SOLE PROPERTY OF C. W. HOWE PARTNERS INC. TO A PART THEREOF SHALL BE COPIED OR USED WITH ANY OTHER WORK OTHER THAN THE SPECIFIC PROJECT FOR WHICH THEY HAVE BEEN DEVELOPED, NOR SHALL THEY BE ASSIGNED TO ANY THIRD PARTY WITHOUT THE CONSENT OF C. W. HOWE PARTNERS INC.

PRINTED: MARCH 6, 2009 BACKGROUNDS DATED: FEBRUARY 17, 2009

THE ABOVE DRAWINGS, SPECIFICATIONS AND DESIGNS ARE THE SOLE PROPERTY OF C. W. HOWE PARTNERS INC NO PART THEREOF SHALL BE COPIED OR USED WITH ANY OTHER WORK OTHER THAN THE SPECIFIC PROJECT FOR WHICH THEY HAVE BEEN DEVELOPED, NOR SHALL THEY BE ASSIGNED TO ANY THIRD PARTY WITHOUT THE CONSENT OF C. W. HOWE PARTNERS INC

- VERCO 5 1/2" W3 COMPOSITE DECK WITH LIGHT-WEIGHT CONCRETE (F'c=3500 PSI) & GAUGE 18 DECKING. WELD DECK TO SUPPORTS @ 12" O.C. WITH MIN. 1/2" dia. PUDDLE WELD. BUTTON PUNCH @ 36" O.C. (SHORING NOT REQUIRED)

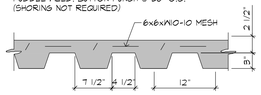

- VERCO 6 1/2" W3 COMPOSITE DECK WITH LIGHT-WEIGHT CONCRETE (F'c=3500 PSI) & GAUGE 18 DECKING. WELD DECK TO SUPPORTS @ 12" O.C. WITH MIN. 1/2" dia. PUDDLE WELD. BUTTON PUNCH @ 36" O.C. (SHORING NOT REQUIRED)

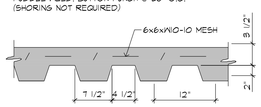

10) SCREWS SHALL BE SUFFICIENT LENGTH TO ENSURE PENETRATION INTO STEEL STUD BY AT LEAST 2 FULL DIAMETER THREADS.

11) CONTRACTORS RESPONSIBLE FOR CONSTRUCTION OF A WIND OR SEISMIC FORCE RESISTING/COMPONENT LISTED IN THE "STATE OF SPECIAL INSPECTION" SHALL SUBMIT A WRITTEN STATEMENT OF RESPONSIBILITY TO THE LADBS INSPECTION AND THE OWNER PRIOR TO THE COMMENCEMENT OF WORK ON SUCH SYSTEM OR COMPONENT PER 1706.1

12) CONTINUOUS SPECIAL INSPECTION BY A REGISTERED DEPUTY INSPECTOR IS REQUIRED FOR FIELD WELDING CONCRETE STRENGTH F'c>2500 PSI HIGH STRENGTH BOLTING, SPRAYED-ON FIREPROOFING AND STEEL MOMENT FRAMES.

13) THE LATERAL FORCE RESISTING SYSTEM FOR THIS BUILDING IS SPECIAL MOMENT FRAME.

14) ADD TOP REBAR OVER ALL BEAMS PER (7/S-7)

15) SEE SCHEDULE FOR WELDING PATTERN OF DECK ON DETAIL (9/S-7)

16) CONTRACTOR TO VERIFY ALL (E) CONDITIONS AND NOTIFY ENGINEER OF RECORD IF THERE OCCUR ANY DISCREPANCIES BETWEEN PLANS AND FIELD CONDITIONS.

17) PROVIDE L4x4x1/4 LATERAL BRACING DIRECTLY OUTSIDE OF MOMENT FRAME BEAM (FLOOR LEVEL) PROTECTION ZONE PER DETAILS (22/S-7) (23/S-7)

FRAMING PLAN NOTES

1) F.B. = FLOOR BEAM R.B. = ROOF BEAM

- = PIPE COLUMN (SIZE AS NOTED ON PLAN)
- = TUBE COLUMN (SIZE AS NOTED ON PLAN)
- = WIDE FLANGE COLUMN (SIZE AS NOTED ON PLAN)
- = MOMENT CONNECTION
- = STEEL BEAM (SIZE AS NOTED ON PLAN)
- = VERCO TYPE HSB-36 GAUGE 20 ROOF DECK WITH STANDARD BUTTON PUNCH SIDE LAP @ 12" OC.

ROOF DECK

7 ARG SPOT PUDDLE WELDS TO FRAMING PER 36" SHEETS

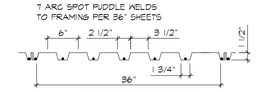

WELD PATTERN TO SUPPORT

2) ALL WALLS ARE NON-BEARING STEEL STUD TENANT IMPROVEMENT PARTITIONS.

3) STEEL STUDS SHALL BE AT 16" O.C. MAXIMUM SPACING.

4) SEE SCHEDULE FOR STUD SIZE BASED UPON HEIGHT ON DETAIL (8/S-7)

5) TYPICAL STUD CONNECTION DETAILS ARE ON SHEET S-5.

6) GENERAL NOTES FOR STEEL STUD CONSTRUCTION ARE ON SHEET S-1.

7) ALL BEAMS TO HAVE STIFFENER PLATES PER (2/S-6)

8) WELDING OF LIGHT GAUGE STEEL MUST BE PERFORMED BY A WELDER CERTIFIED FOR LIGHT GAUGE WELDING AND INSPECTION IS REQUIRED.

9) AXIAL LOAD BEARING STUDS MUST BE FASTENED ON BOTH SIDES AT TOP AND BOTTOM OF THE WALL. TRACKS TO PREVENT TORSIONAL BUCKLING.

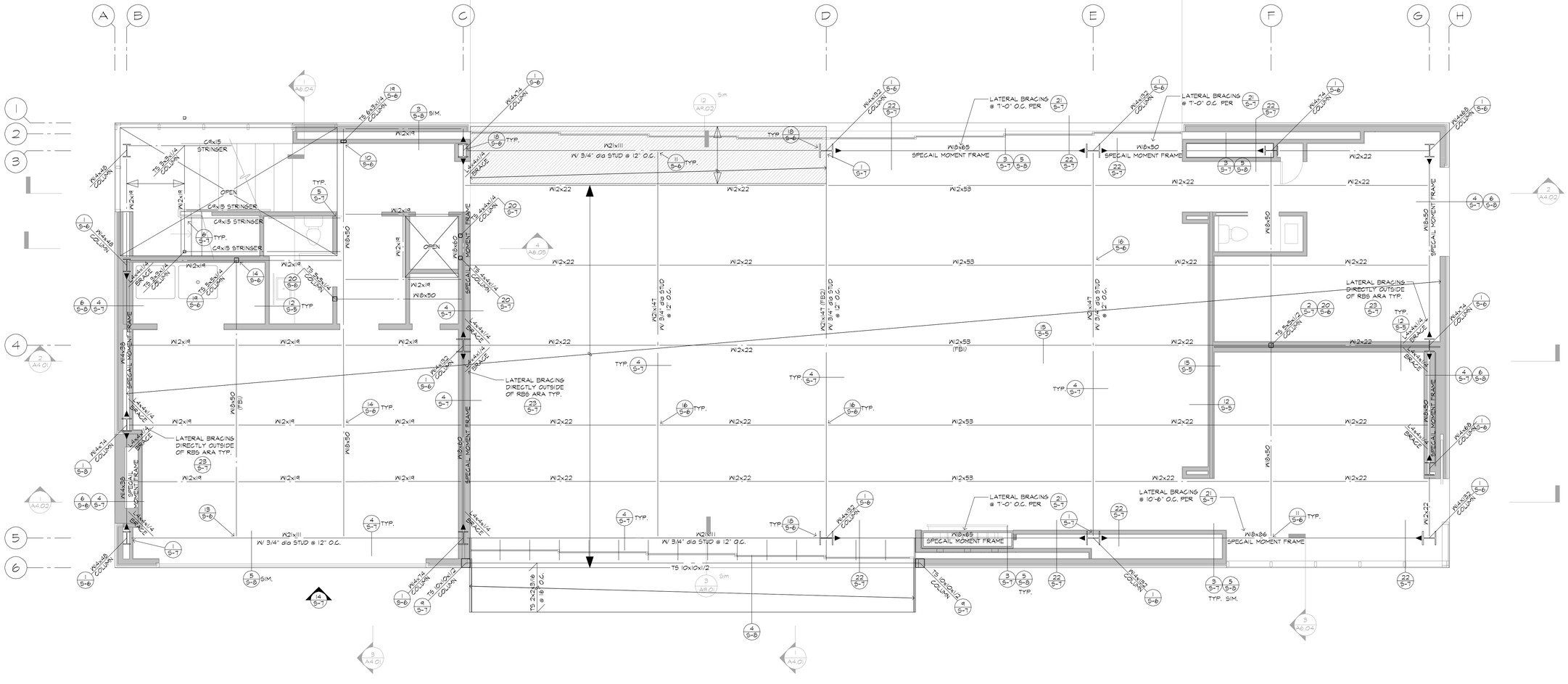

SECOND FLOOR FRAMING PLAN

REVISIONS DATE

C. W. Howe Partners Inc.
Structural Engineering Consultants
3347 Motor Avenue, Suite 200 Los Angeles, CA 90034
(310) 838-0383 tel (310) 838-5380 fax www.cwhowe.com

NOT FOR CONSTRUCTION UNTIL SIGNED BY ENGINEER
CARL W. HOWE
PROFESSIONAL ENGINEER
CIVIL
No. 44773
EXP. 3/31/10
STATE OF CALIFORNIA

HOFFMAN/CASTLEMAN RESIDENCE
1445 EL BASQUE COURT
PACIFIC PALISADES, CA 90272

SECOND FLOOR FRAMING PLAN

PROJECT NUMBER: 07E04
PROJ. ENG'R. / CHK'D / DRAWN: NSP / / DAJ
DATE: 2009
SCALE: 1/4" = 1'-0"
SHEET NUMBER: S-3

PRINTED: MARCH 6, 2009 BACKGROUNDS DATED: FEBRUARY 17, 2009

10) SCREWS SHALL BE SUFFICIENT LENGTH TO ENSURE PENETRATION INTO STEEL STUD BY AT LEAST 2 FULL DIAMETER THREADS.

11) CONTRACTORS RESPONSIBLE FOR CONSTRUCTION OF A WIND OR SEISMIC FORCE RESISTING/COMPONENT LISTED IN THE "STATE OF SPECIAL INSPECTION" SHALL SUBMIT A WRITTEN STATEMENT OF RESPONSIBILITY TO THE LADBS INSPECTION AND THE OWNER PRIOR TO THE COMMENCEMENT OF WORK ON SUCH SYSTEM OR COMPONENT PER 1706.1

12) CONTINUOUS SPECIAL INSPECTION BY A REGISTERED DEPUTY INSPECTOR IS REQUIRED FOR FIELD WELDING CONCRETE STRENGTH F'c>2500 PSI HIGH STRENGTH BOLTING, SPRAYED-ON FIREPROOFING AND STEEL MOMENT FRAMES.

13) THE LATERAL FORCE RESISTING SYSTEM FOR THIS BUILDING IS SPECIAL MOMENT FRAME.

14) SEE SCHEDULE FOR WELDING PATTERN OF DECK ON DETAIL 9/S-7

15) CONTRACTOR TO VERIFY ALL (E) CONDITIONS AND NOTIFY ENGINEER OF RECORD IF THERE OCCUR ANY DISCREPANCIES BETWEEN PLANS AND FIELD CONDITIONS.

16) PROVIDE L3x3x1/4 LATERAL BRACING DIRECTLY OUTSIDE OF MOMENT FRAME BEAM (ROOF LEVLE) PROTECTION ZONE PER DETAILS 22/S-7 23/S-7

FRAMING PLAN NOTES

1) F.B. = FLOOR BEAM R.B. = ROOF BEAM

o = PIPE COLUMN (SIZE AS NOTED ON PLAN)

□ = TUBE COLUMN (SIZE AS NOTED ON PLAN)

⊢⊣ = WIDE FLANGE COLUMN (SIZE AS NOTED ON PLAN)

◄⊣ = MOMENT CONNECTION

= STEEL BEAM (SIZE AS NOTED ON PLAN)

= VERCO TYPE HSB-36 GAUGE 20 ROOF DECK WITH STANDARD BUTTON PUNCH SIDE LAP@ 12" O.C.

7 ARC SPOT PUDDLE WELDS TO FRAMING PER 36" SHEETS

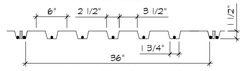

WELD PATTERN TO SUPPORT

2) ALL WALLS ARE NON-BEARING STEEL STUD TENANT IMPROVEMENT PARTITIONS.

3) STEEL STUDS SHALL BE AT 16" O.C. MAXIMUM SPACING.

4) SEE SCHEDULE FOR STUD SIZE BASED UPON HEIGHT ON DETAIL 15/S-7

5) TYPICAL STUD CONNECTION DETAILS ARE ON SHEET S-5.

6) GENERAL NOTES FOR STEEL STUD CONSTRUCTION ARE ON SHEET S-1.1

7) ALL BEAMS TO HAVE STIFFENER PLATES PER 2/S-6

8) WELDING OF LIGHT GAUGE STEEL MUST BE PERFORMED BY A WELDER CERTIFIED FOR LIGHT GAUGE WELDING AND INSPECTION IS REQUIRED.

9) AXIAL LOAD BEARING STUDS MUST BE FASTENED ON BOTH SIDES AT TOP AND BOTTOM OF THE WALL. TRACKS TO PREVENT TORSIONAL BUCKLING.

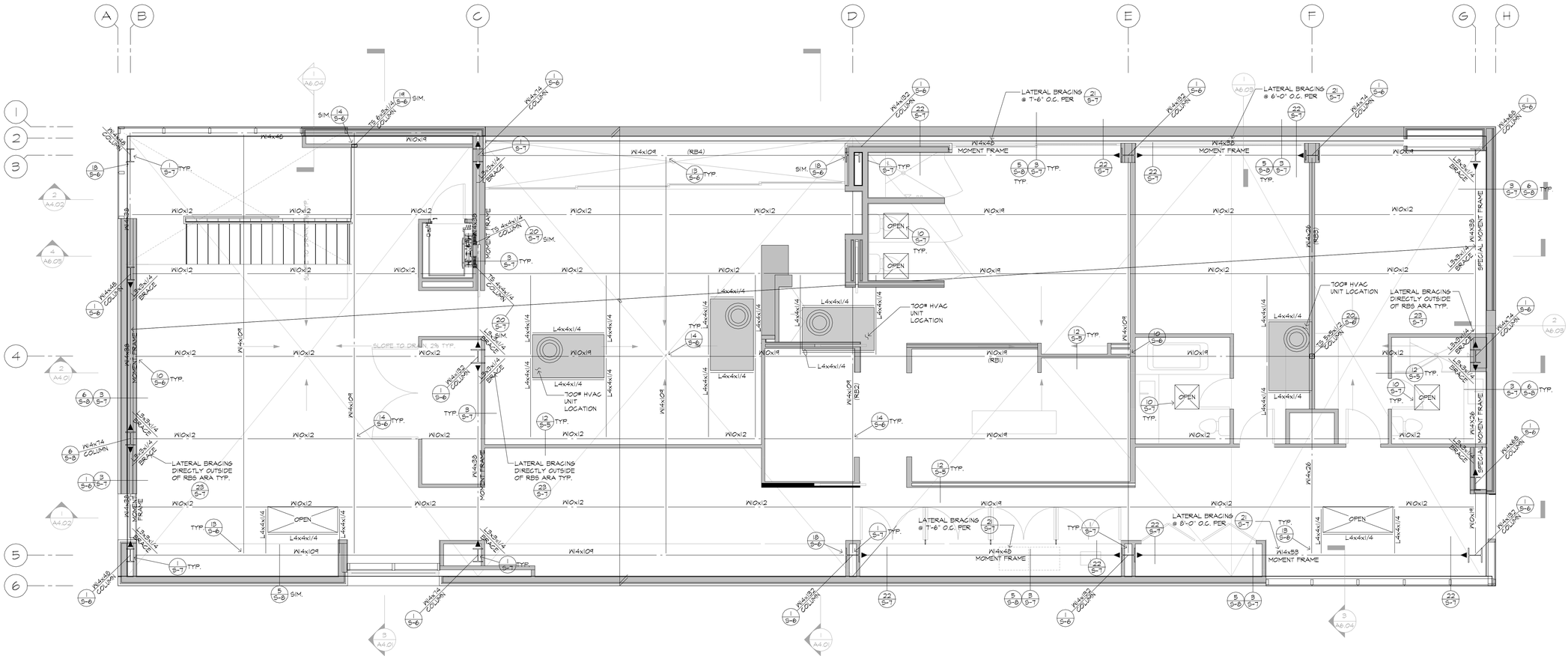

ROOF FRAMING PLAN

REVISIONS DATE

C. W. Howe Partners Inc.
Structural Engineering Consultants
33417 Ionor Avenue, Suite 200 Los Angeles, CA 90034
(310) 838-0333 tel (310) 838-5380 fax www.cwhowe.com

NOT FOR CONSTRUCTION UNTIL SIGNED BY ENGINEER

CARL W. HOWE
PROFESSIONAL ENGINEER
CIVIL
No. 44773
EXP. 3/31/10
STATE OF CALIFORNIA

HOFFMAN/CASTLEMAN RESIDENCE
1445 EL BASQUE COURT
PACIFIC PALISADES, CA 90272

ROOF FRAMING PLAN

PROJECT NUMBER: 07E04
PROJ. ENGR. / CHK'D / DRAWN: NSP / / DAJ
DATE: 2009
SCALE: 1/4" = 1'-0"
SHEET NUMBER: S-4

THE ABOVE DRAWINGS, SPECIFICATIONS AND DESIGNS ARE THE SOLE PROPERTY OF C. W. HOWE PARTNERS INC. NO PART THEREOF SHALL BE COPIED OR USED WITH ANY OTHER WORK OTHER THAN THE

PRINTED: MARCH 6, 2009 BACKGROUNDS DATED: FEBRUARY 17, 2009

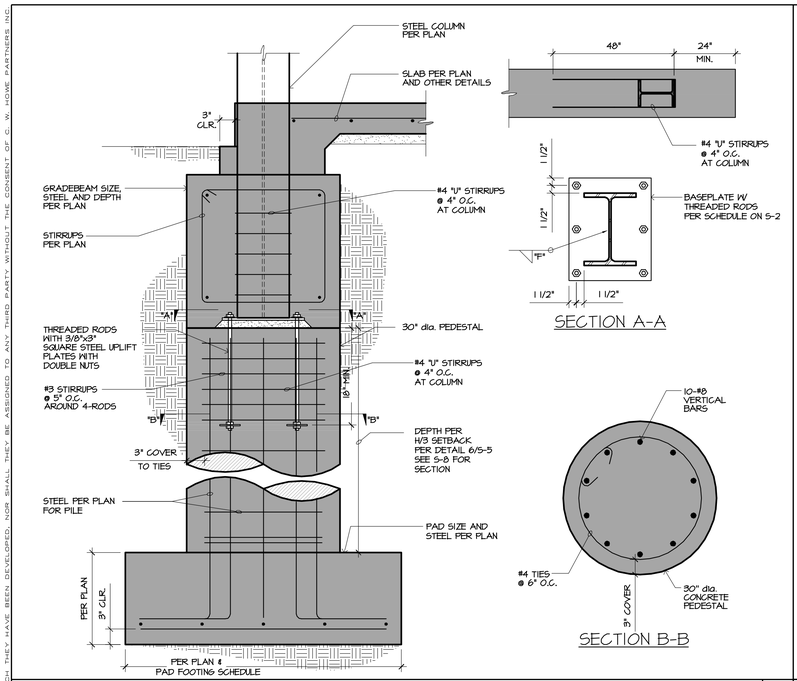

SECTION A-A

SECTION B-B

STEEL COLUMN TO PIER & GRADEBEAM | 14

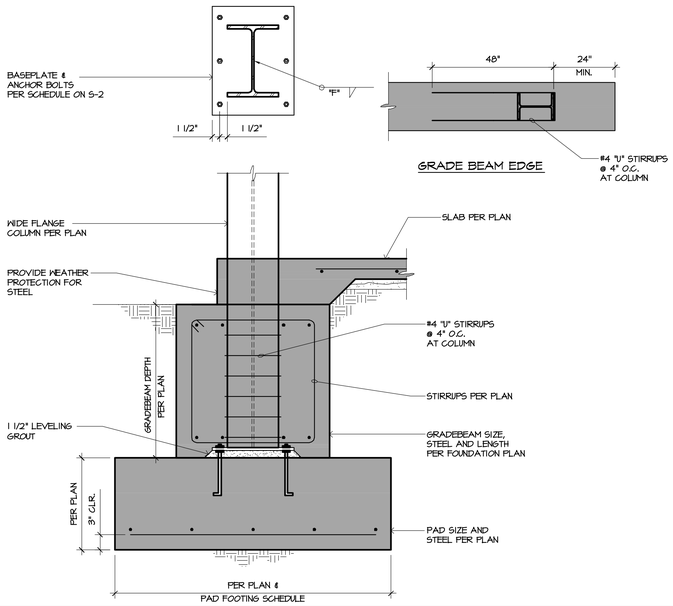

GRADE BEAM EDGE

STEEL COLUMN ENCASED IN GRADEBEAM | 7

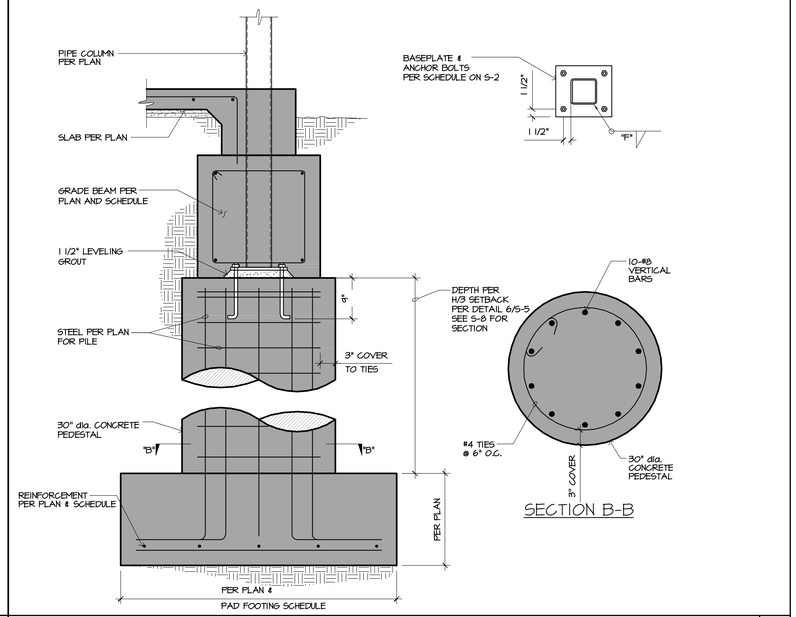

SECTION B-B

TS COLUMN AT FOUNDATION | 1

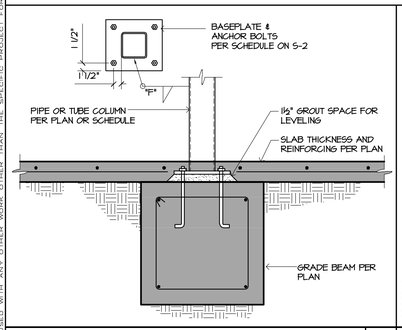

STEEL COLUMN TO GRADE BEAM | 18

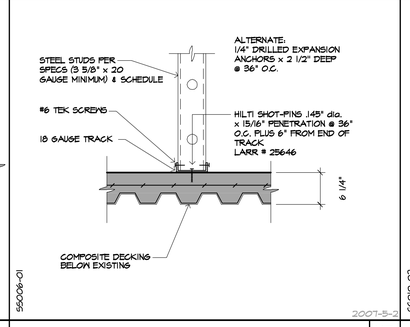

TYPICAL TRACK ATTACHMENT TO SLAB | 15

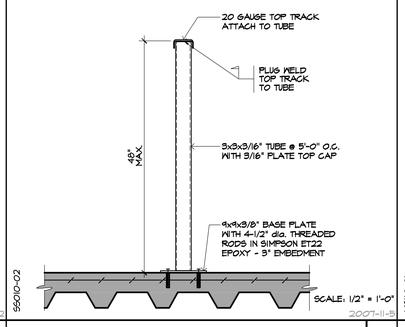

LOW WALL SUPPORT - TYPICAL | 11

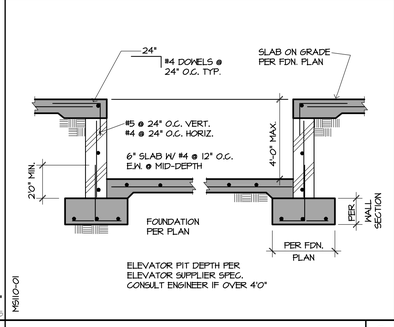

ELEVATOR PIT SECTION | 8

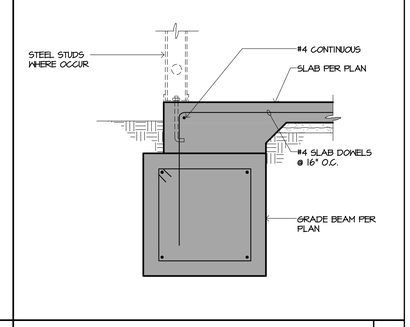

GRADE BEAM BELOW SLAB | 4

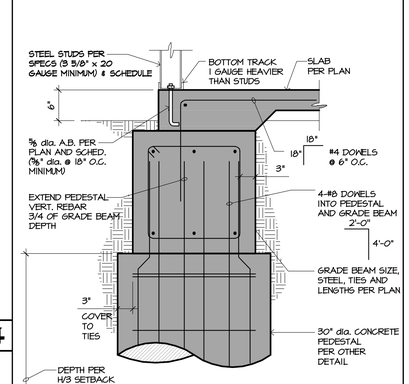

PEDESTAL - GRADE BEAM FOUNDATION | 2

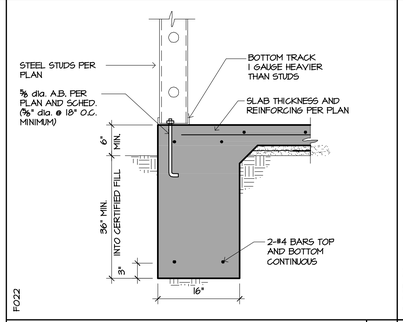

TYPICAL EXTERIOR FOUNDATION | 16

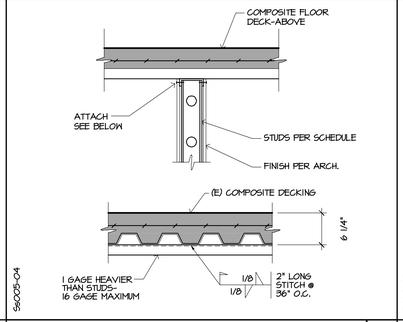

ALTERNATE TRACK ATTACH TO DECKING ABOVE | 12

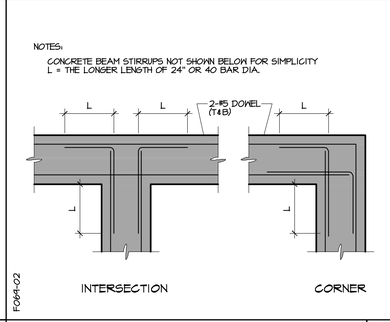

GRADE BEAMS INTERSECTIONS AND CORNERS | 9

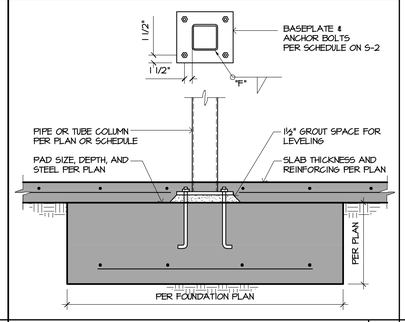

TUBE COLUMN PAD FOUNDATION | 5

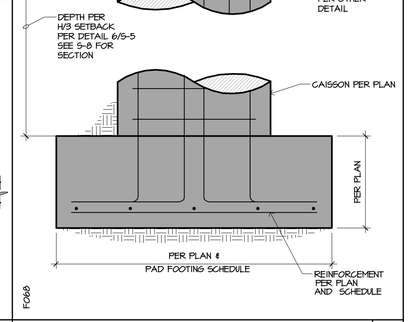

PEDESTAL - GRADE BEAM FOUNDATION | 2

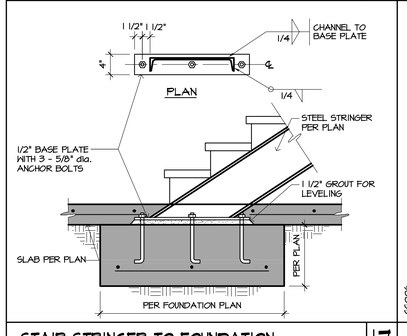

STAIR STRINGER TO FOUNDATION | 17

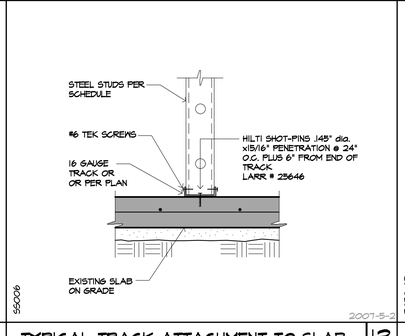

TYPICAL TRACK ATTACHMENT TO SLAB | 13

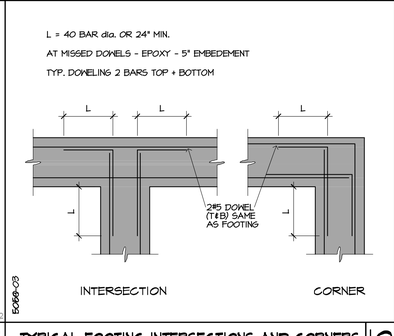

TYPICAL FOOTING INTERSECTIONS AND CORNERS | 10

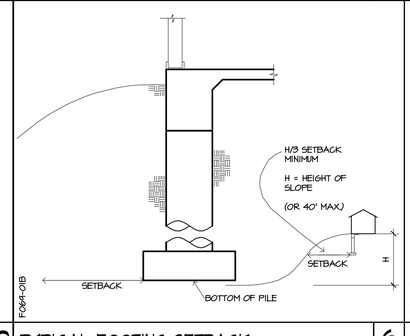

TYPICAL FOOTING SETBACK | 6

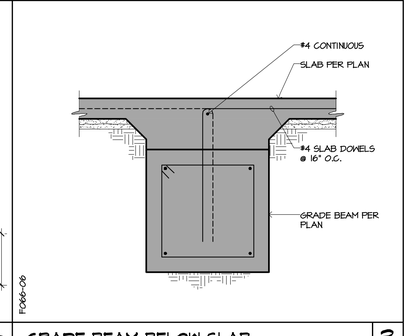

GRADE BEAM BELOW SLAB | 3

THE ABOVE DRAWINGS, SPECIFICATIONS, AND DESIGNS ARE THE SOLE PROPERTY OF C. W. HOWE PARTNERS INC. NO PART THEREOF SHALL BE COPIED, DISCLOSED WITH ANY OTHER WORK OTHER THAN THE SPECIFIC PROJECT FOR WHICH THEY HAVE BEEN DEVELOPED, NOR SHALL THEY BE ASSIGNED TO ANY THIRD PARTY WITHOUT THE CONSENT OF C. W. HOWE PARTNERS INC.

PRINTED: OCTOBER 6, 2008

PRINTED: JUNE 24, 2008

REVISIONS | DATE

C. W. Howe Partners Inc.
Structural Engineering Consultants
3347 Motor Avenue, Suite 200 Los Angeles, CA 90034
(310) 838-0383 tel (310) 838-5380 fax www.cwhowe.com

NOT FOR CONSTRUCTION UNTIL SIGNED BY ENGINEER

CARL W. HOWE
PROFESSIONAL ENGINEER
CIVIL
No. 44773
EXP. 3/31/10
STATE OF CALIFORNIA

HOFFMAN/CASTLEMAN RESIDENCE
1445 EL BASQUE COURT
PACIFIC PALISADES, CA 90272

STRUCTURAL DETAILS

PROJECT NUMBER : 07E04
PROJ. ENG. / CHECK / DRAWN: NSP / / JMH
SCALE : 2008
SCALE : NONE
SHEET NUMBER : S-5

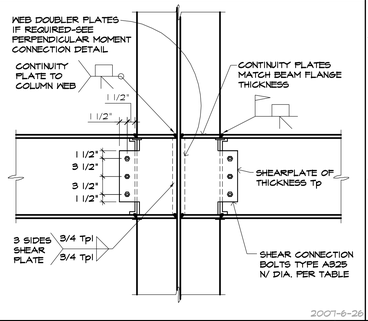

MOMENT CONNECTION THROUGH COLUMN WEB | 17

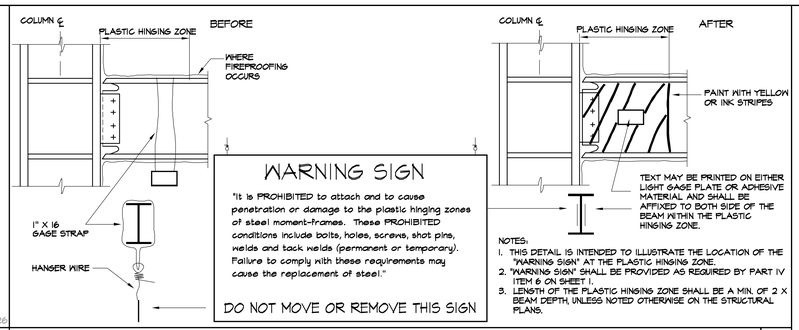

NOTES:
1. THIS DETAIL IS INTENDED TO ILLUSTRATE THE LOCATION OF THE "WARNING SIGN" AT THE PLASTIC HINGING ZONE.
2. "WARNING SIGN" SHALL BE PROVIDED AS REQUIRED BY PART IV ITEM 6 ON SHEET 1.
3. LENGTH OF THE PLASTIC HINGING ZONE SHALL BE A MIN. OF 2 X BEAM DEPTH, UNLESS NOTED OTHERWISE ON THE STRUCTURAL PLANS.

WARNING SIGN AT PROTECTION ZONE | 8

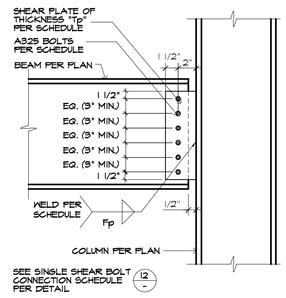

BEAM TO COLUMN CONNECTION | 18

A-325 SINGLE SHEAR BOLT CONNECTION SCHEDULE				
BEAM SUPPORTED	WELD Fp	SHEAR PLATE Tp	NO. OF A-325 BOLTS (U.N.O.)	ASD ALLOWABLE CAPACITY (KIPS)
W 8x	3/16"	3/8"	2-3/4" dia.	18.6
W 10x	3/16"	3/8"	2-3/4" dia.	18.6
W 12x	3/16"	3/8"	3-3/4" dia.	27.9
W 14x	3/16"	3/8"	3-7/8" dia.	37.8
W 16x	1/4"	1/2"	4-7/8" dia.	50.4
W 18x	1/4"	1/2"	4-1" dia.	66.0
W 21x	1/4"	1/2"	6-1" dia.	99.0
W 24x	1/4"	1/2"	7-1" dia.	115.5

2007-2-14

STEEL BEAM SCHEDULE | 12

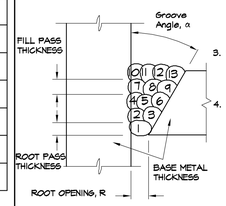

NOTES:
1. FOR MAXIMUM FILL PASS THICKNESS, SEE TABLE 5 ON SHEET 2.
2. FOR MOMENT CONNECTION AT BOTTOM BEAM FLANGE TO COLUMN FLANGE, THE MAXIMUM ROOT PASS THICKNESS SHALL NOT EXCEED 1/4" PER PART V, ITEM 1. FOR WELDED CONNECTION AT ALL OTHER LOCATIONS, SEE TABLE 5 ON SHEET 2 FOR MAXIMUM ROOT PASS THICKNESS.
3. ROOT OPENING, R, AND GROOVE ANGLE,A, SHALL BE PER SELECTED AWS PREQUALIFIED CJP GROOVE WELDED JOINT DETAIL.
4. WELDING PASS NUMBERS ARE SHOWN DIAGRAMMATICALLY TO INDICATE SEQUENCE. QUANTITY OF PASSES MAY VARY DUE TO DEPTH AND/OR POSITION OF WELD. THIS FIGURE IS INTENDED TO ILLUSTRATE RECOMMENDED WELDING SEQUENCE FOR FCAW AND SMAW WELDING PROCESS ONLY.

WELD PASS SEQUENCE | 9

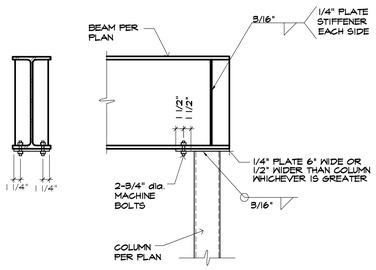

BEAM TO COLUMN CONNECTION | 19

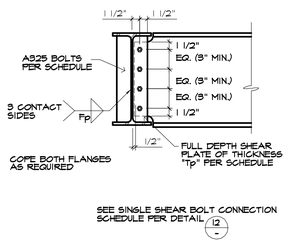

SINGLE SHEAR BEAM TO BEAM CONNECTION | 13

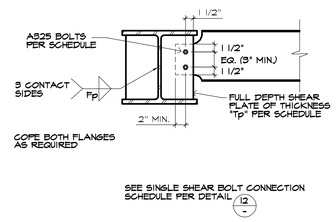

SINGLE SHEAR BEAM TO BEAM CONNECTION | 10

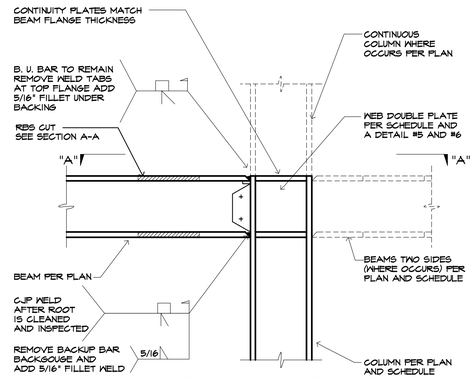

FRAME CONNECTION ELEVATION

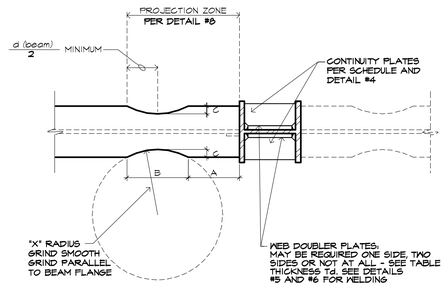

SECTION A-A - REDUCED BEAM CUT

NOTES:
1. ALL WELDS: ETO
2. ALL GROOVE WELDS: ELECTRODES MUST BE RATED FOR CVN OF AT LEAST 20 ft-lbs AT 0 deg. F. SEE DETAIL #7
3. ALL WELDING SHALL CONFORM TO AWS D1.1
4. SEE RBS SPECIFICATIONS ON S-1.1 OF THESE PLANS FOR FABRICATION REQUIREMENTS.
5. WELDED SHEAR STUDS, DECKING ATTACHMENTS THAT PENETRATE THE BEAM FLANGES, WELDED, BOLTED, SCREWED, OR SHOT-IN ATTACHMENTS FOR PERIMETER EDGE ANGLES, FACADES, PARTITIONS, DUCT WORK, PIPING, OR OTHER CONSTRUCTION SHALL NOT BE PLACED WITHIN THE "PROTECTED ZONE". DECKING ARC-SPOT WELDS AS REQUIRED TO SECURE DECKING ARE PERMITTED.
6. THERE SHALL BE NO FIELD CUTTING OF STRUCTURAL STEEL MEMBERS IN THE SEISMIC FORCE RESISTING SYSTEM FOR THE WORK OF OTHER TRADES WITHOUT WRITTEN PRIOR APPROVAL OF THE ENGINEER.
7. ALL WIDE FLANGE SECTIONS FOR REDUCED BEAM SECTION MOMENT FRAMES SHALL BE A992 STEEL
8. TACK BACKING BARS WITHIN THE JOINT
9. THE SPECIFICATION & FABRICATION FOR STEEL FRAMES SHALL COMPLY WITH WELDING & FABRICATION PROCEDURE ON S-1.1
10. WELD ACCESS HOLE TO BE PER DETAIL #3
11. REFER TO STEEL NOTES SHEET S-1.1 AND S-1.2 FOR QC/QA SPECIFICATIONS
12. REDUCED BEAM SECTION SHALL BE MADE USING THERMAL CUTTING TO PRODUCE A SMOOTH CURVE. MAXIMUM SURFACE ROUGHNESS OF 500 MICROINCHES PER ANSI B46.1 AND AWS C4.1-77. THERMAL CUTTING TOLERANCE SHALL BE PLUS OR MINUS 1/4 INCH DEEP.

SPECIAL MOMENT FRAME CONNECTION - REDUCED BEAM SECTION (RBS) | 1

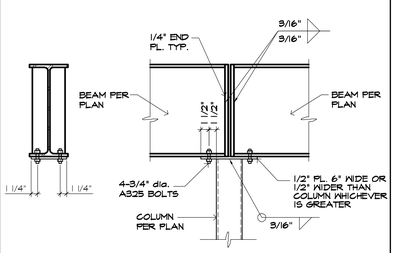

BEAM TO COLUMN CONNECTION | 20

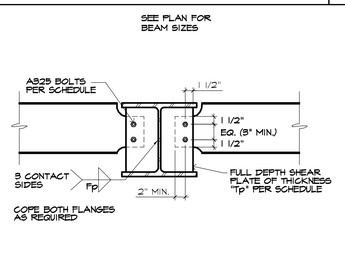

SINGLE SHEAR BEAM TO BEAM CONNECTION | 14

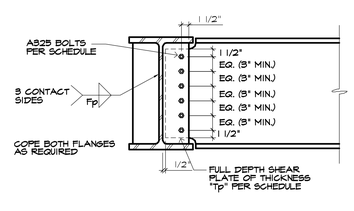

SINGLE SHEAR BEAM TO BEAM CONNECTION | 11

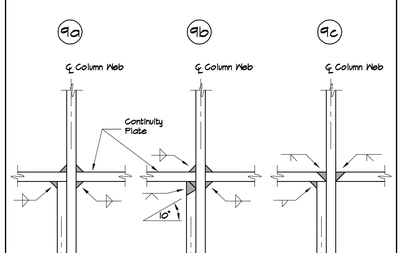

DOUBLER PLATE WELDS TO CONTINUITY PLATE | 6

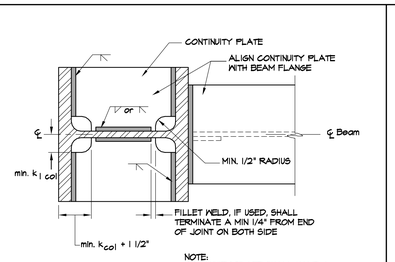

NOTE:
CONTINUITY PLATE SHALL HAVE A THICKNESS GREATER THAN OR EQUAL TO THE BEAM FLANGE OR BEAM FLANGE CONNECTION PLATE.

CONTINUITY PLATE DETAIL | 4

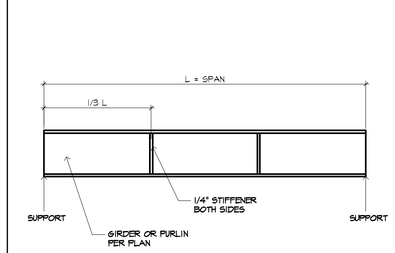

TYPICAL WEB STIFFENER-ALL BEAMS | 2

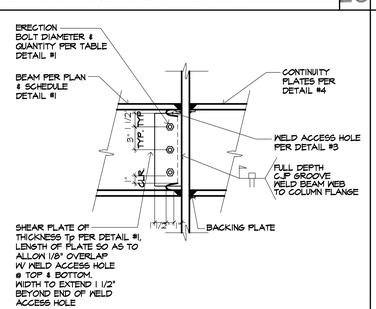

SHEAR PLATE CONNECTION | 2

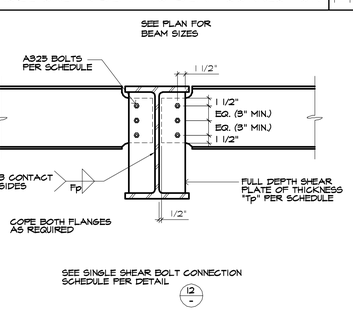

SINGLE SHEAR BEAM TO BEAM CONNECTION | 16

TOLERANCES	
As Detailed	As Fit-Up
R = +1/16, -0	+1/4, -1/16
α = +10°, -0°	+10°, -5°

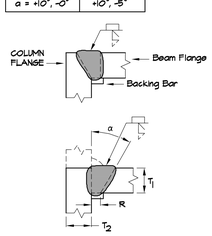

Welding Process	Joint Designation	Base Metal Thickness (U = unlimited)		Groove Preparation		Allowed Welding Positions	Gas Shielding for FCAW
		T_1	T_2	Root Opening	Groove Angle		
SMAW	TC-U4a	U	U	R = 1/4	α = 45°	All	-
				R = 3/8	α = 30°	F, V, OH	-
FCAW	TC-U4a-GF	U	U	R = 3/16	α = 30°	All	Required
				R = 3/8	α = 30°	F	Not required
				R = 1/4	α = 45°	All	Not required

NOTES:
1. GROOVE WELDS IN CORNER AND T-JOINTS OF CYCLICALLY LOADED STRUCTURES SHALL BE REINFORCED WITH FILLET WELDS EQUAL TO $T_1/4$, BUT NEED NOT EXCEED 3/8 INCH.
2. FOR CORNER JOINTS, THE OUTSIDE GROOVE PREPARATION MAY BE IN EITHER OR BOTH MEMBERS, PROVIDED THE BASIC GROOVE CONFIGURATION IS NOT CHANGED AND ADEQUATE EDGE DISTANCE IS MAINTAINED TO SUPPORT THE WELDING OPERATIONS WITHOUT EXCESSIVE EDGE MELTING.
3. ADAPTED WITH PERMISSION FROM THE AWS D1.1 COMMITTEE ON STRUCTURAL WELDING, STRUCTURAL WELDING CODE - STEEL, AWS D1.1/D1.1M: 2002, MIAMI: AMERICAN WELDING SOCIETY, FIGURE 3.4 PG. 42 (TOP LEFT).

AWS PREQUALIFIED CJP GROOVE WELDED JOINT DETAIL | 7

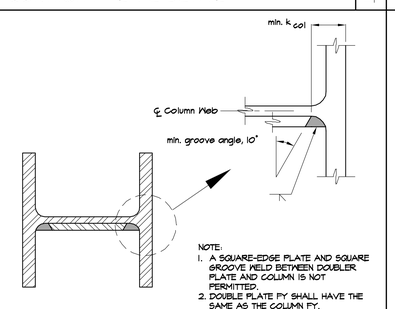

NOTE.
1. A SQUARE-EDGE PLATE AND SQUARE GROOVE WELD BETWEEN DOUBLER PLATE AND COLUMN IS NOT PERMITTED.
2. DOUBLE PLATE PY SHALL HAVE THE SAME AS THE COLUMN FY.

GROOVE WELDED DOUBLER PLATE | 5

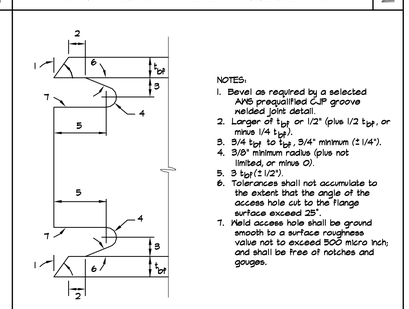

NOTES:
1. Bevel as required by a selected AWS prequalified CJP groove welded joint detail.
2. Larger of t_{bf} or 1/2" (plus 1/2 t_{bf}, or minus 1/4 t_{bf}).
3. 3/4 t_{bf} to t_{bf}, 3/4" minimum (± 1/4").
4. 3/8" minimum radius (plus not limited, or minus 0).
5. 3 t_{bf} (± 1/2").
6. Tolerances shall not accumulate to the extent that the angle of the access hole cut to the flange surface exceed 25°.
7. Weld access hole shall be ground smooth to a surface roughness value not to exceed 500 micro inch; and shall be free of notches and gouges.

WELD ACCESS HOLE DETAIL | 3

THE ABOVE DRAWINGS, SPECIFICATIONS, AND DESIGNS ARE THE SOLE PROPERTY OF C. W. HOWE PARTNERS INC. NO PART THEREOF SHALL BE COPIED OR USED WITH ANY OTHER WORK OTHER THAN THE SPECIFIC PROJECT FOR WHICH THEY HAVE BEEN DEVELOPED, NOR SHALL THEY BE ASSIGNED TO ANY THIRD PARTY WITHOUT THE CONSENT OF C. W. HOWE PARTNERS INC.

PRINTED: SEPTEMBER 08, 2009

REVISIONS | DATE

C. W. Howe Partners Inc.
Structural Engineering Consultants
3347 Torrance Avenue, Suite 200 Los Angeles, CA 90034
(310) 838-0333 Tel (310) 838-3380 Fax www.cwhowe.com

NOT FOR CONSTRUCTION UNTIL SIGNED BY ENGINEER
CARL W. HOWE
PROFESSIONAL ENGINEER
CIVIL
No. 44773
EXP. 3/31/10
STATE OF CALIFORNIA

HOFFMAN/CASTLEMAN RESIDENCE
1445 EL BASQUE COURT
PACIFIC PALISADES, CA 90272

STRUCTURAL DETAILS

PROJECT NUMBER : 07E04
PROJ. ENGR./CHK. BY/DRAWN BY: NSP / / DAJ
DATE : 2008
SCALE : NONE
SHEET NUMBER : S-6

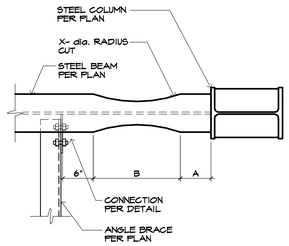

LATERAL BRACING AT REDUCED BEAM SECTION | 22

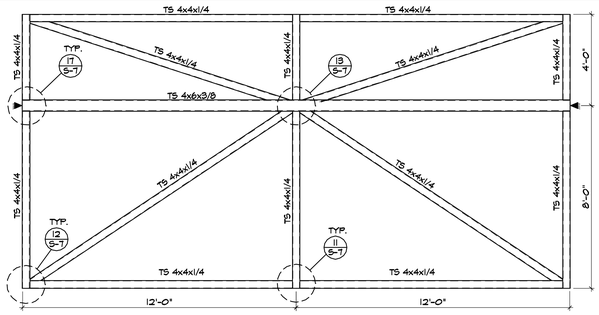

GARAGE DOOR ELEVATION | 14

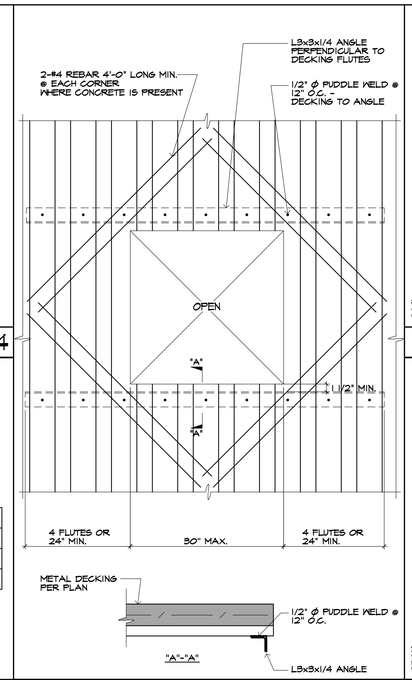

TYP. ROOF/FLOOR OPENING | 10

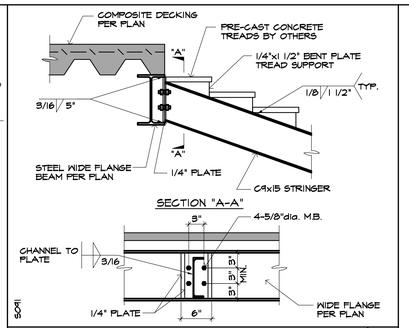

STAIR STRINGER TO WIDE FLANGE | 5

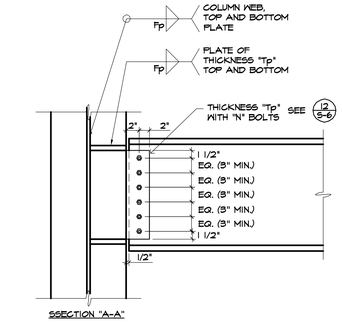

BEAM TO COLUMN WEB | 1

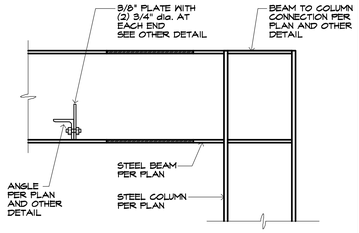

LATERAL BRACING AT REDUCED BEAM SECTION | 22

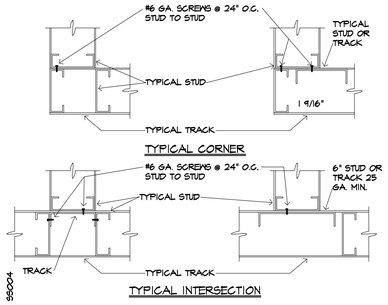

TYPICAL STEEL STUD INTERSECTIONS | 18

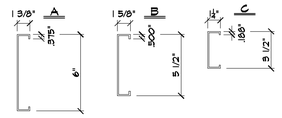

	STUD *	HEIGHT	SPACING	LAT. LOAD	WALL FINISH	LOCATION
A	600S137-54	16'-0"	16"	30 PSF	STUCCO	EXTERIOR
B	350S162-54	16'-0"	16"	30 PSF	STUCCO	EXTERIOR
C	350S125-43	15'-0"	16"	5 PSF	DRYWALL	INTERIOR

* ALL STUDS PER STEEL STUD MANUFACTURERS ASSOCIATION (SSMA).
* NON-COMPOSITE NON-STRUCTURAL WALLS

S5C01-03

TYPICAL NON-BEARING STEEL STUD SCHEDULE | 15

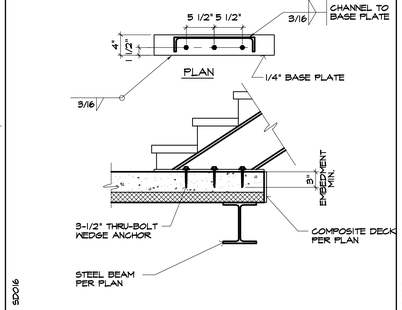

STAIR STRINGER TO DECKING | 6

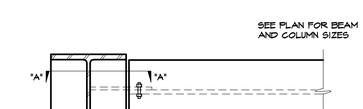

BEAM TO COLUMN WEB | 1

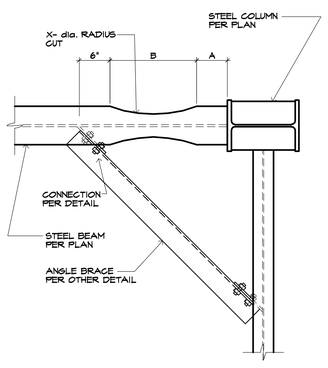

LATERAL BRACING AT REDUCED BEAM SECTION | 22

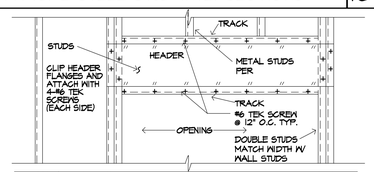

SPAN	STUDS *	TRACK
4'-0"	400S125-33	SIZE OF WALL & 20 GA.
6'-0"	600S162-33	SIZE OF WALL & 20 GA.
8'-0"	600S162-43	SIZE OF WALL & 18 GA.
9'-0"	362S137-43	SIZE OF WALL & 18 GA.
10'-0"	800S162-43	SIZE OF WALL & 18 GA.

* ALL STUDS PER STEEL STUD MANUFACTURERS ASSOCIATION (SSMA).

S5C02-01

TYPICAL INTERIOR HEADER | 19

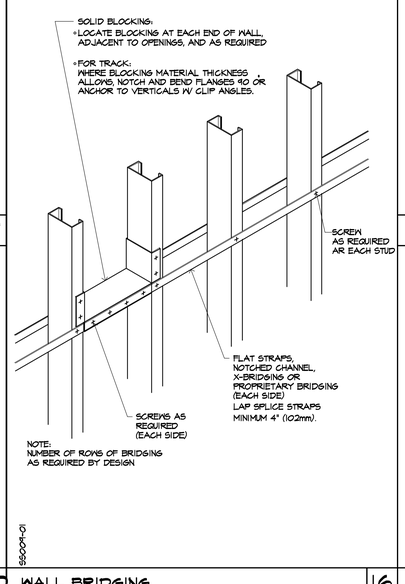

WALL BRIDGING | 16

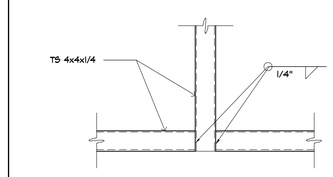

STEEL TUBE TO STEEL TUBE CONNECTION | 11

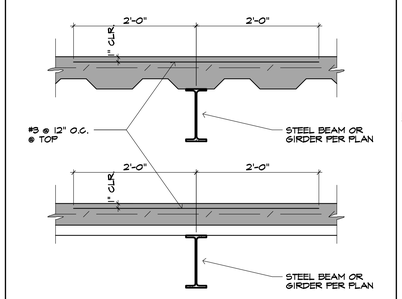

TYP. TOP REBAR AT STEEL BEAM | 7

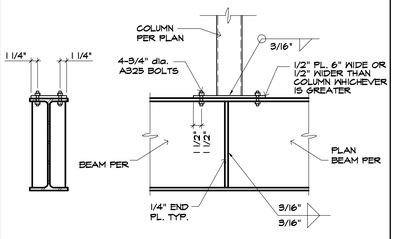

COLUMN TO BEAM CONNECTION | 2

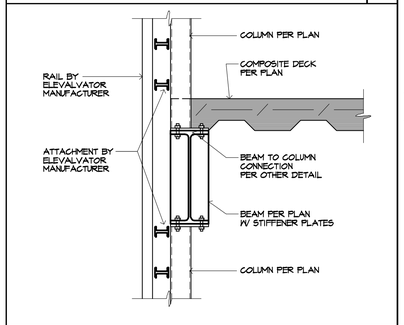

ELEVATOR LATERAL SUPPORT | 20

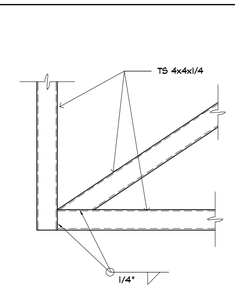

STEEL TUBE TO STEEL TUBE CONNECTION | 12

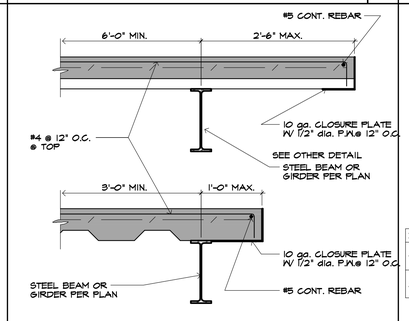

TYP. TOP REBAR AT DECK EDGE | 8

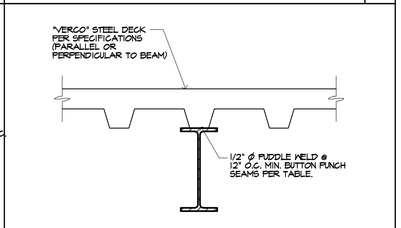

DECK	END SUPPORT	INTER. SUPPORT	PARALLEL WELDS	SIDE LAP
HSB-36 (ROOF)	7-1/2" Ø P.W. PER 36" SHEET	7-1/2" Ø P.W. PER 36" SHEET	1/2" Ø P.W. @12" O.C.	BUTTON PUNCH @12" O.C.
VB (FLOOR)	4-1/2" Ø P.W. PER 36" SHEET	4-1/2" Ø P.W. PER 36" SHEET	1/2" Ø P.W. @12" O.C.	BUTTON PUNCH @36" O.C.

DECK SHEAR TRANSFER | 3

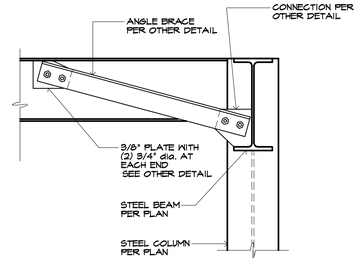

LATERAL BRACING AT REDUCED BEAM SECTION

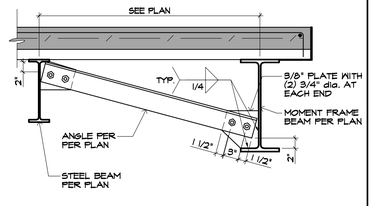

TYPICAL ANGLE BRACE | 21

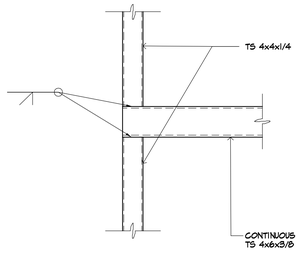

STEEL TUBE TO STEEL TUBE CONNECTION | 17

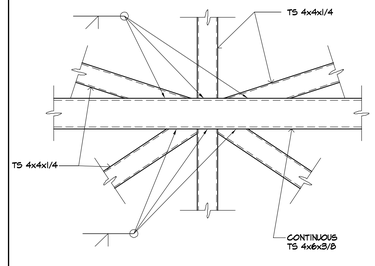

STEEL TUBE TO STEEL TUBE CONNECTION | 13

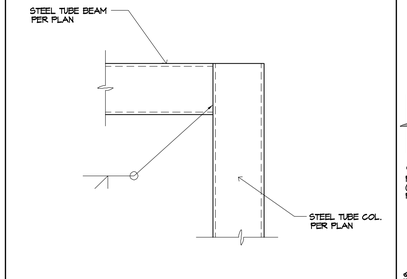

STEEL TUBE COL TO STEEL TUBE BEAM | 9

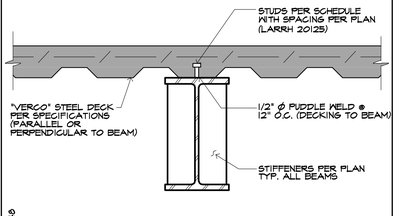

COMPOSITE FLOOR DECK SHR TRANS | 4

THE ABOVE DRAWINGS, SPECIFICATIONS, AND DESIGNS ARE THE SOLE PROPERTY OF C. W. HOWE PARTNERS INC. NO PART THEREOF SHALL BE COPIED OR USED WITH ANY OTHER WORK OTHER THAN THE SPECIFIC PROJECT FOR WHICH THEY HAVE BEEN DEVELOPED, NOR SHALL THEY BE ASSIGNED TO ANY THIRD PARTY WITHOUT THE CONSENT OF C. W. HOWE PARTNERS INC.

PRINTED: MARCH 8, 2009

REVISIONS | DATE

C. W. Howe Partners Inc.
Structural Engineering Consultants
3347 Torrance Avenue, Suite 200 Los Angeles, CA 90034
(310) 838-0383 Tel (310) 838-5380 Fax www.cwhowe.com

NOT FOR CONSTRUCTION UNTIL SIGNED BY ENGINEER

CARL W. HOWE
PROFESSIONAL ENGINEER
CIVIL
No. 44773
EXP. 3/31/10
STATE OF CALIFORNIA

HOFFMAN/CASTLEMAN RESIDENCE
1445 EL BASQUE COURT
PACIFIC PALISADES, CA 90272

STRUCTURAL DETAILS

PROJECT NUMBER : 07E04
PROJ. ENGR. / CHK'D / DRAWN : NSP / / DAJ
DATE : 2008
SCALE : 1"=1'-0"
SHEET NUMBER : S-7

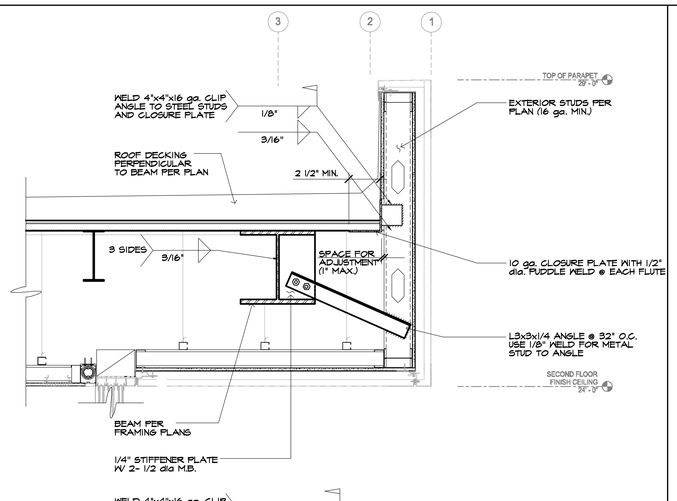

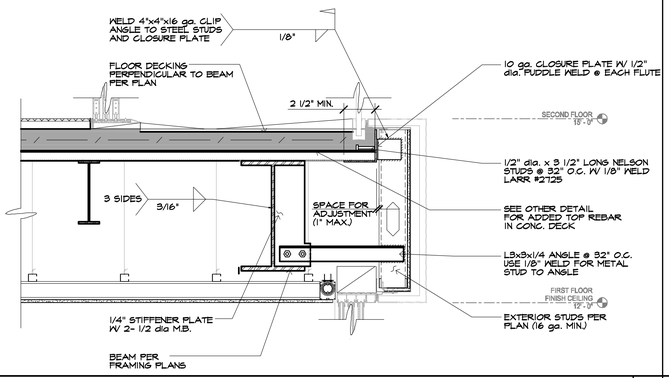

WALL SECTION 5

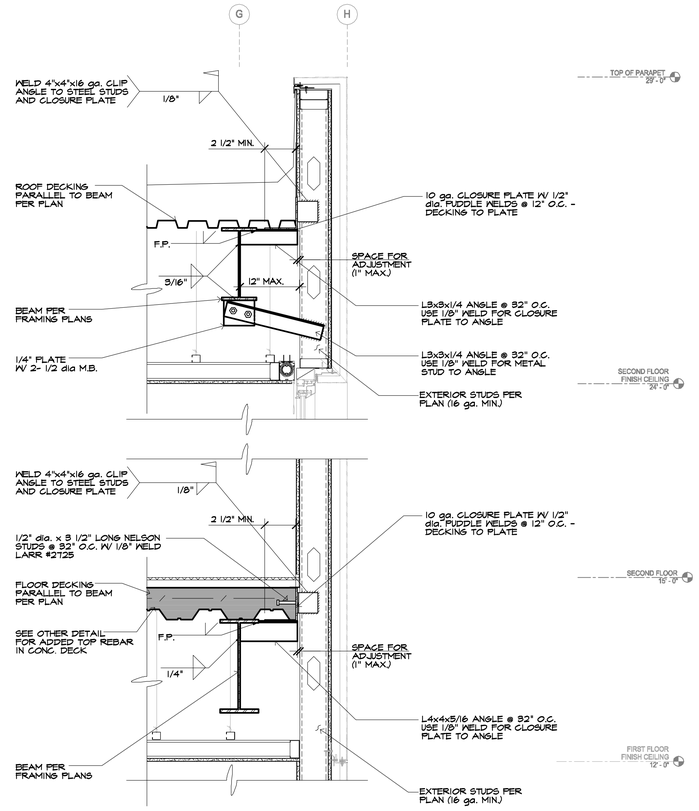

WALL SECTION 3

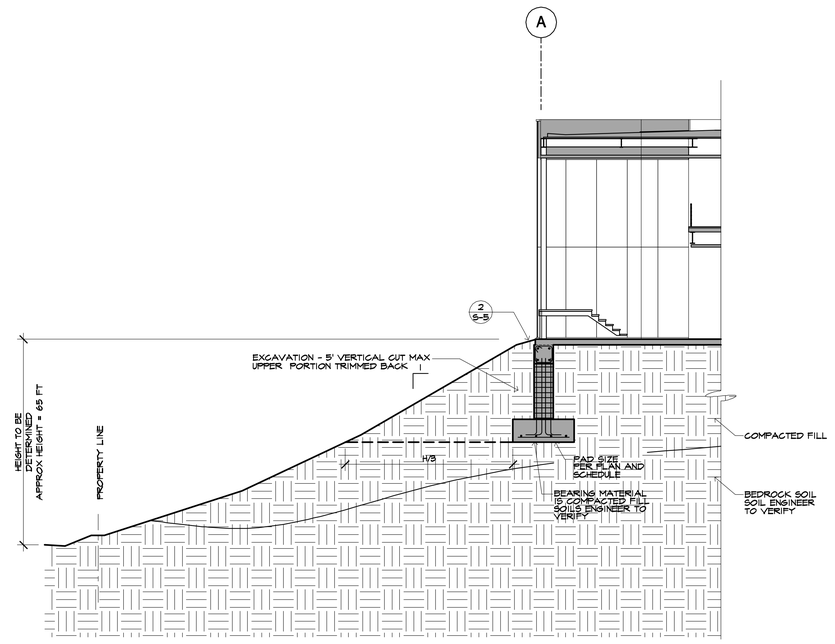

LONGITUDINAL SITE SECTION

LONGITUDINAL SITE SECTION 1

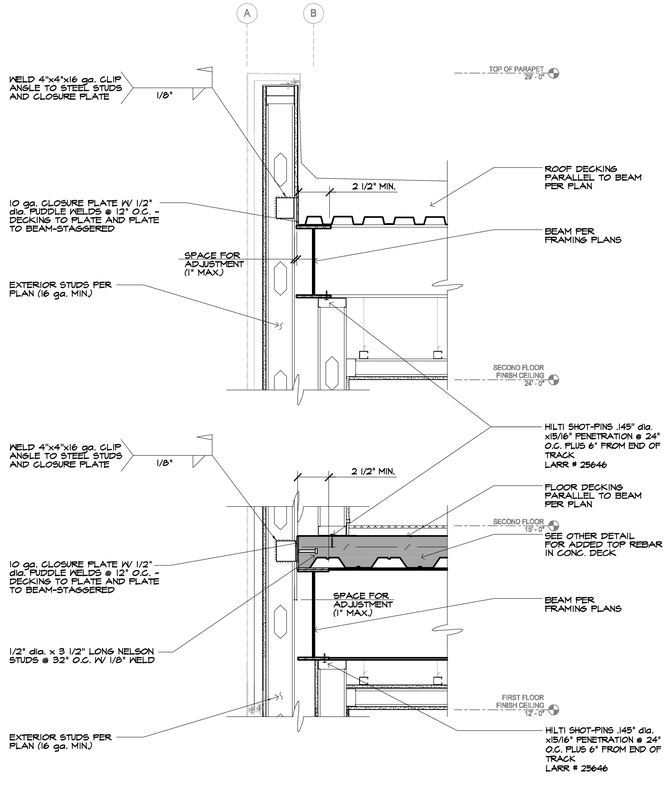

WALL SECTION 6

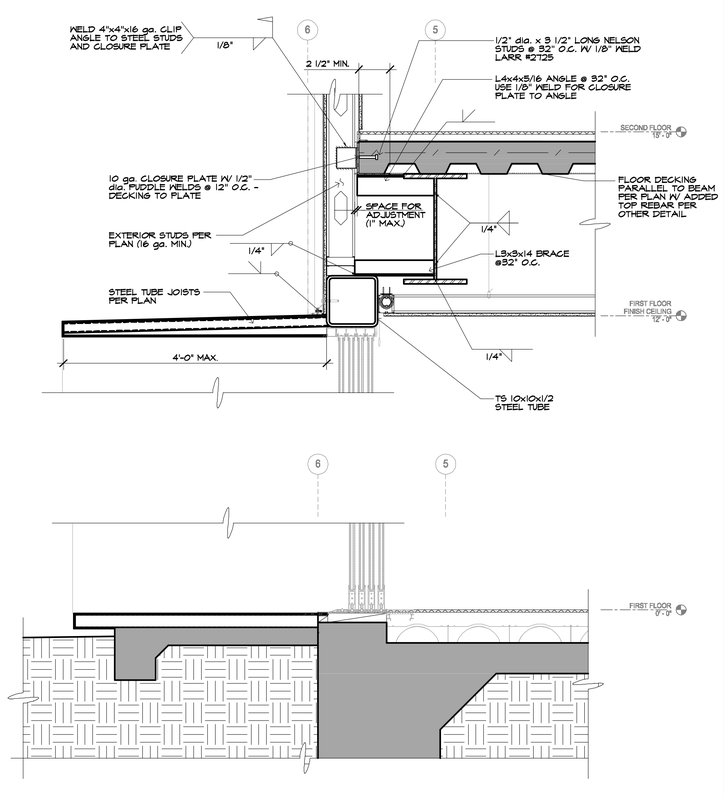

WALL SECTION 4

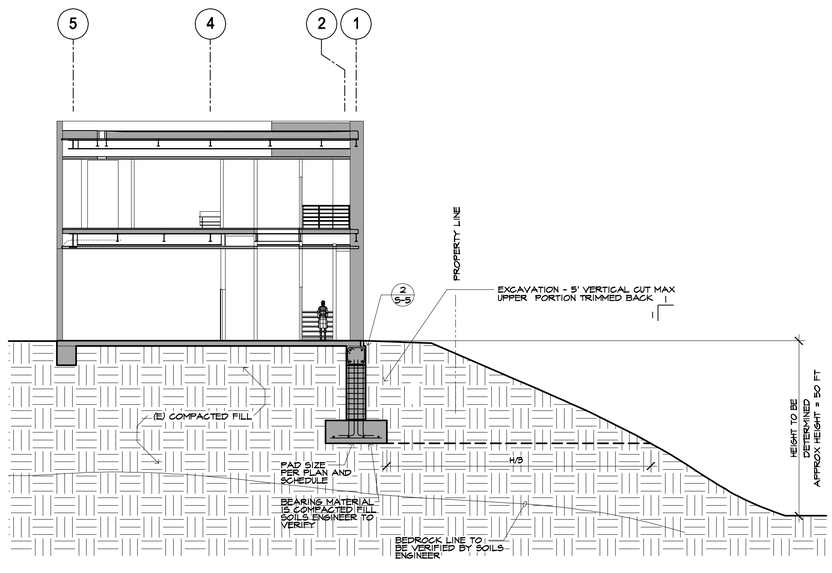

TRANSVERSE SITE SECTION

TRANSVERSE SITE SECTION 2

THE ABOVE DRAWINGS, SPECIFICATIONS, AND DESIGNS ARE THE SOLE PROPERTY OF C. W. HOWE PARTNERS INC. TO PART THEREOF SHALL BE COPIED OR USED WITH ANY OTHER WORK OTHER THAN THE SPECIFIC PROJECT FOR WHICH THEY HAVE BEEN DEVELOPED, NOR SHALL THEY BE ASSIGNED TO ANY THIRD PARTY WITHOUT THE CONSENT OF C. W. HOWE PARTNERS INC.

PRINTED: MARCH 6, 2009 BACKGROUNDS DATED: SEPTEMBER 24, 2008

REVISIONS DATE

C. W. Howe Partners Inc.
Structural Engineering Consultants
3347 Motor Avenue, Suite 200 Los Angeles, CA 90034
(310) 838-0383 tel (310) 838-5380 fax www.cwhowe.com

NOT FOR CONSTRUCTION UNTIL SIGNED BY ENGINEER

CARL W. HOWE
PROFESSIONAL ENGINEER
CIVIL
No. 44773
EXP. 3/31/10
STATE OF CALIFORNIA

HOFFMAN/CASTLEMAN RESIDENCE
1445 EL BASQUE COURT
PACIFIC PALISADES, CA90272

STRUCTURAL SECTIONS

PROJECT NUMBER: 07E04
PROJ. ENG'R. / CHK'D / DRAWN: NSP / / DAJ
DATE: 2008
SCALE: 1/8" = 1'-0"
SHEET NUMBER: S-8

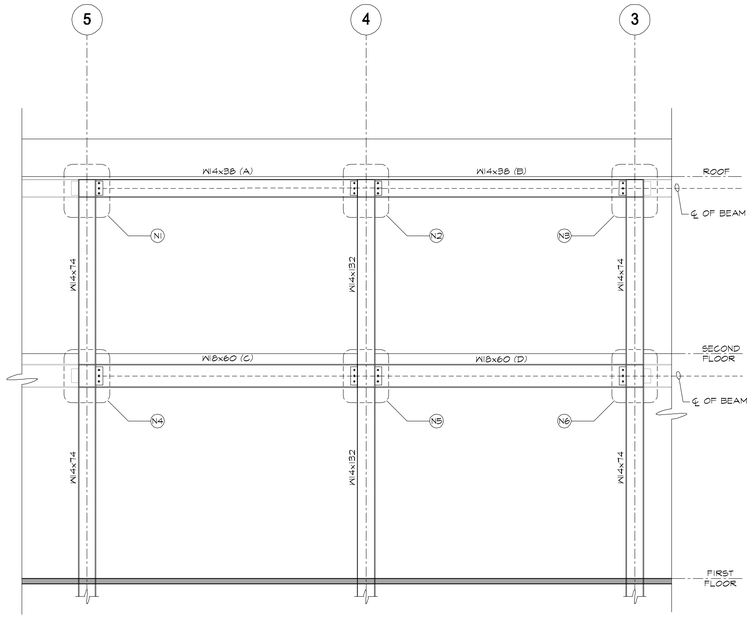

BEAM	BEAM SECTION	SHEAR PLATE BOLTS (PER DETAIL 21/S-6) ERECTION BOLT DIAMETER (A325)	SHEAR PLATE BOLTS (PER DETAIL 21/S-6) QUANTITY OF BOLTS	SHEAR PLATE THICKNESS Tp	REDUCED BEAM SECTION (RBS) "X" dia. RADIUS	REDUCED BEAM SECTION (RBS) A (INCHES)	REDUCED BEAM SECTION (RBS) B (INCHES)	REDUCED BEAM SECTION (RBS) C (INCHES)
A	W14x38	3	3/4"	3/8"	SHOP TO DETERMINE	3"	9"	1.35"
B	W14x38	3	3/4"	3/8"	|	3"	9"	1.35"
C	W18x60	4	7/8"	1/2"	|	4"	12"	1.60"
D	W18x60	4	7/8"	1/2"	|	4"	12"	1.60"

SEE DETAIL 1/S-6 FOR CONNECTION

JOINT	COLUMN SECTION	CONTINUITY PLATE (PER DETAIL 4/S-6) THICKNESS Tc	WEB DOUBLER PLATE (S) (PER DETAIL 5 AND 6/S-6) THICKNESS Td	WEB DOUBLER PLATE (S) (PER DETAIL 5 AND 6/S-6) 1 OR 2 SIDES
N1	W14x74	0.52"	5/16"	1 SIDE
N2	W14x132	0.52"	1/2"	1 SIDE
N3	W14x74	0.52"	5/16"	1 SIDE
N4	W14x74	0.70"	1/4"	2 SIDES
N5	W14x132	0.70"	1/2"	2 SIDES
N6	W14x74	0.70"	1/4"	2 SIDES

MOMENT FRAME ELEVATION @ GRID C | 4

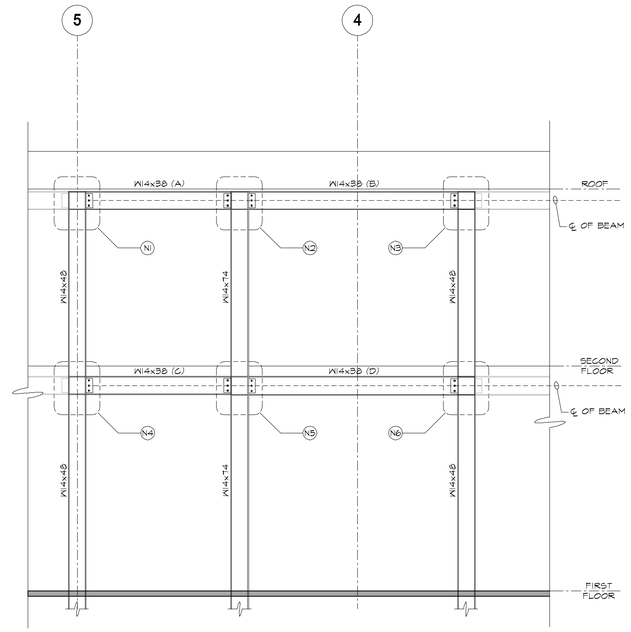

BEAM	BEAM SECTION	SHEAR PLATE BOLTS (PER DETAIL 21/S-6) ERECTION BOLT DIAMETER (A325)	SHEAR PLATE BOLTS (PER DETAIL 21/S-6) QUANTITY OF BOLTS	SHEAR PLATE THICKNESS Tp	REDUCED BEAM SECTION (RBS) "X" dia. RADIUS	REDUCED BEAM SECTION (RBS) A (INCHES)	REDUCED BEAM SECTION (RBS) B (INCHES)	REDUCED BEAM SECTION (RBS) C (INCHES)
A	W14x38	3	3/4"	3/8"	SHOP TO DETERMINE	3"	9"	1.40"
B	W14x38	3	3/4"	3/8"	|	3"	9"	1.40"
C	W14x38	3	3/4"	3/8"	|	3"	9"	1.58"
D	W14x38	3	3/4"	3/8"	|	3"	9"	1.40"

SEE DETAIL 1/S-6 FOR CONNECTION

JOINT	COLUMN SECTION	CONTINUITY PLATE (PER DETAIL 4/S-6) THICKNESS Tc	WEB DOUBLER PLATE (S) (PER DETAIL 5 AND 6/S-6) THICKNESS Td	WEB DOUBLER PLATE (S) (PER DETAIL 5 AND 6/S-6) 1 OR 2 SIDES
N1	W14x48	0.52"	5/16"	1 SIDE
N2	W14x74	0.55"	1/4"	2 SIDES
N3	W14x48	0.52"	5/16"	1 SIDE
N4	W14x48	0.52"	5/16"	1 SIDE
N5	W14x74	0.65"	3/8"	2 SIDES
N6	W14x48	0.52"	5/16"	1 SIDE

MOMENT FRAME ELEVATION @ GRID B | 3

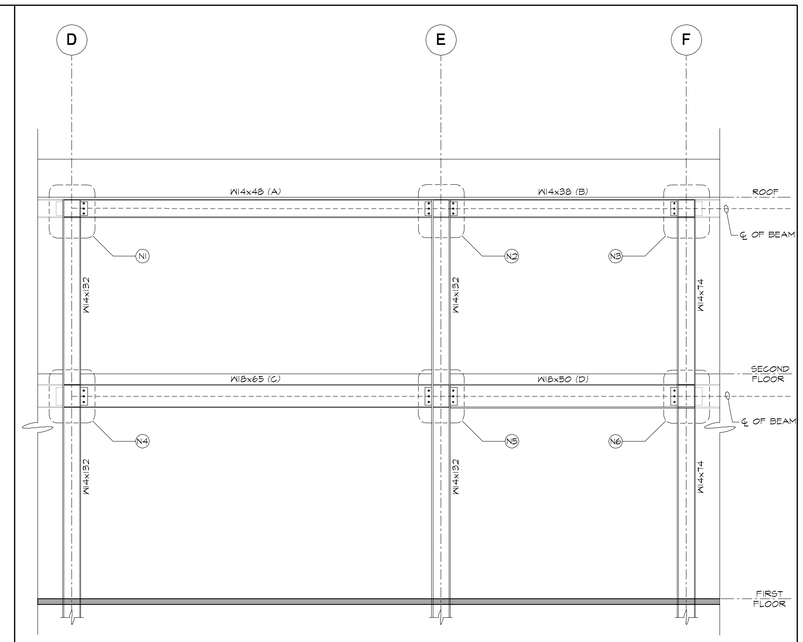

BEAM	BEAM SECTION	SHEAR PLATE BOLTS (PER DETAIL 21/S-6) ERECTION BOLT DIAMETER (A325)	SHEAR PLATE BOLTS (PER DETAIL 21/S-6) QUANTITY OF BOLTS	SHEAR PLATE THICKNESS Tp	REDUCED BEAM SECTION (RBS) "X" dia. RADIUS	REDUCED BEAM SECTION (RBS) A (INCHES)	REDUCED BEAM SECTION (RBS) B (INCHES)	REDUCED BEAM SECTION (RBS) C (INCHES)
A	W14x48	3	3/4"	3/8"	SHOP TO DETERMINE	4"	9"	1.41"
B	W14x38	3	3/4"	3/8"	|	3"	9"	1.35"
C	W18x65	4	7/8"	1/2"	|	4"	12"	1.45"
D	W18x50	4	7/8"	1/2"	|	4"	12"	1.62"

SEE DETAIL 1/S-6 FOR CONNECTION

JOINT	COLUMN SECTION	CONTINUITY PLATE (PER DETAIL 4/S-6) THICKNESS Tc	WEB DOUBLER PLATE (S) (PER DETAIL 5 AND 6/S-6) THICKNESS Td	WEB DOUBLER PLATE (S) (PER DETAIL 5 AND 6/S-6) 1 OR 2 SIDES
N1	W14x132	0.6"	5/16"	1 SIDE
N2	W14x132	0.6"	5/16"	2 SIDES
N3	W14x74	0.52"	5/16"	1 SIDE
N4	W14x132	0.75"	1/4"	2 SIDES
N5	W14x132	0.75"	1/2"	2 SIDES
N6	W14x74	0.57"	3/8"	1 SIDE

MOMENT FRAME ELEVATION @ GRID 3 | 1

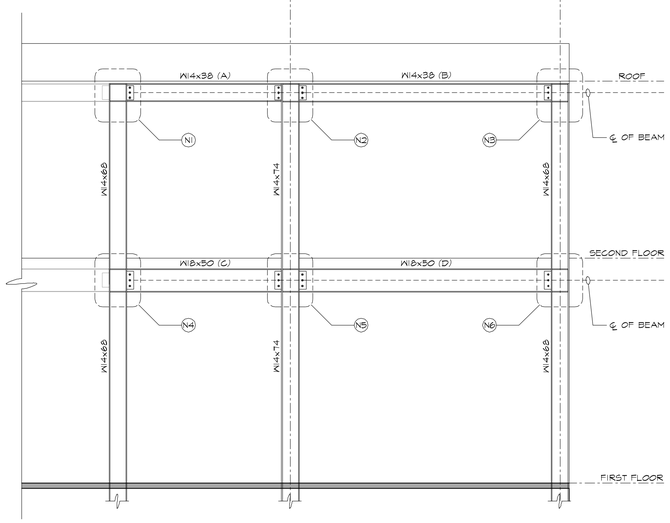

BEAM	BEAM SECTION	SHEAR PLATE BOLTS (PER DETAIL 21/S-6) ERECTION BOLT DIAMETER (A325)	SHEAR PLATE BOLTS (PER DETAIL 21/S-6) QUANTITY OF BOLTS	SHEAR PLATE THICKNESS Tp	REDUCED BEAM SECTION (RBS) "X" dia. RADIUS	REDUCED BEAM SECTION (RBS) A (INCHES)	REDUCED BEAM SECTION (RBS) B (INCHES)	REDUCED BEAM SECTION (RBS) C (INCHES)
A	W14x48	3	3/4"	3/8"	SHOP TO DETERMINE	3"	9"	1.35"
B	W14x38	3	3/4"	3/8"	|	3"	9"	1.35"
C	W18x50	4	7/8"	3/8"	|	4"	12"	1.81"
D	W18x50	4	7/8"	3/8"	|	4"	12"	1.59"

SEE DETAIL 1/S-6 FOR CONNECTION

JOINT	COLUMN SECTION	CONTINUITY PLATE (PER DETAIL 4/S-6) THICKNESS Tc	WEB DOUBLER PLATE (S) (PER DETAIL 5 AND 6/S-6) THICKNESS Td	WEB DOUBLER PLATE (S) (PER DETAIL 5 AND 6/S-6) 1 OR 2 SIDES
N1	W14x68	0.52"	5/16"	1 SIDE
N2	W14x74	0.54"	1/4"	2 SIDES
N3	W14x68	0.52"	5/16"	1 SIDE
N4	W14x68	0.57"	3/8"	1 SIDE
N5	W14x74	0.86"	1/2"	2 SIDES
N6	W14x68	0.57"	3/8"	1 SIDE

MOMENT FRAME ELEVATION @ GRID 6 | 5

PRINTED: MARCH 6, 2009 BACKGROUNDS DATED: MARCH 28, 2008

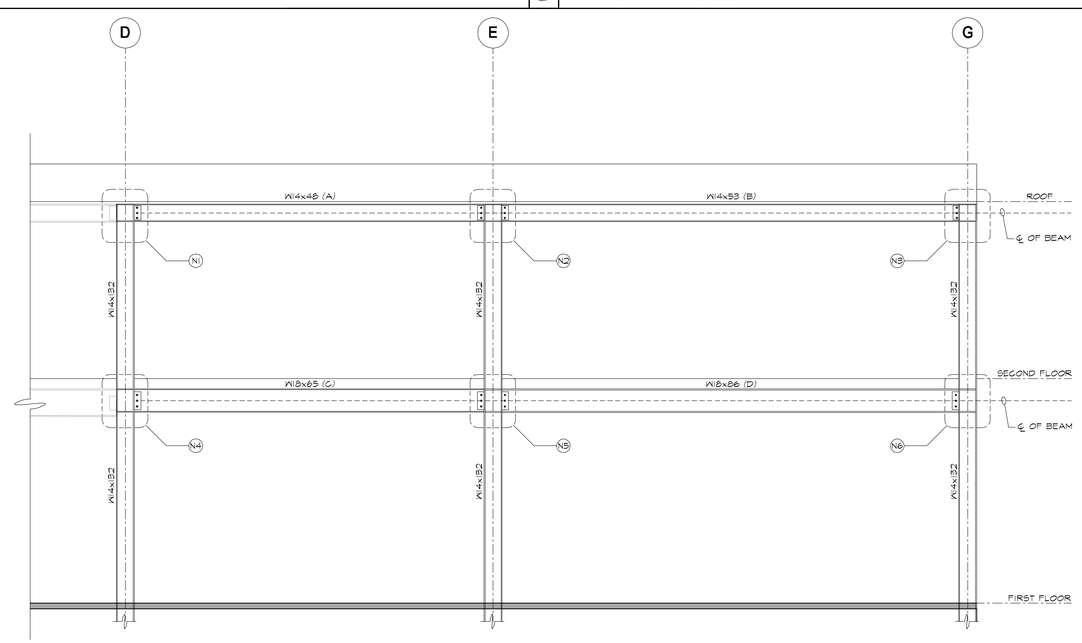

BEAM	BEAM SECTION	SHEAR PLATE BOLTS (PER DETAIL 21/S-6) ERECTION BOLT DIAMETER (A325)	SHEAR PLATE BOLTS (PER DETAIL 21/S-6) QUANTITY OF BOLTS	SHEAR PLATE THICKNESS Tp	REDUCED BEAM SECTION (RBS) "X" dia. RADIUS	REDUCED BEAM SECTION (RBS) A (INCHES)	REDUCED BEAM SECTION (RBS) B (INCHES)	REDUCED BEAM SECTION (RBS) C (INCHES)
A	W14x48	3	3/4"	3/8"	SHOP TO DETERMINE	4"	9"	1.48"
B	W14x53	3	3/4"	3/8"	|	4"	9"	1.41"
C	W18x65	4	7/8"	1/2"	|	4"	12"	1.48"
D	W18x86	4	7/8"	1/2"	|	6"	12"	2.00"

SEE DETAIL 1/S-6 FOR CONNECTION

JOINT	COLUMN SECTION	CONTINUITY PLATE (PER DETAIL 4/S-6) THICKNESS Tc	WEB DOUBLER PLATE (S) (PER DETAIL 5 AND 6/S-6) THICKNESS Td	WEB DOUBLER PLATE (S) (PER DETAIL 5 AND 6/S-6) 1 OR 2 SIDES
N1	W14x132	0.6"	3/8"	1 SIDE
N2	W14x132	0.66"	1/2"	2 SIDES
N3	W14x132	0.66"	3/8"	1 SIDE
N4	W14x132	0.75"	3/8"	1 SIDE
N5	W14x132	0.91"	3/4"	2 SIDES
N6	W14x132	0.77"	3/8"	2 SIDES

MOMENT FRAME ELEVATION @ GRID 5 | 2

THE ABOVE DRAWINGS, SPECIFICATIONS AND DESIGNS ARE THE SOLE PROPERTY OF C. W. HOWE PARTNERS INC. NO PART THEREOF SHALL BE COPIED OR USED WITH ANY OTHER WORK OTHER THAN THE SPECIFIC PROJECT FOR WHICH THEY HAVE BEEN DEVELOPED, NOR SHALL THEY BE ASSIGNED TO ANY THIRD PARTY WITHOUT THE CONSENT OF C. W. HOWE PARTNERS INC.

REVISIONS DATE

C. W. Howe Partners Inc.
Structural Engineering Consultants
3347 Torrance Avenue, Suite 200 Los Angeles, CA 90034
(310) 838-0383 tel (310) 838-3380 fax www.cwhowe.com

NOT FOR CONSTRUCTION UNTIL SIGNED BY ENGINEER
CARL W. HOWE
PROFESSIONAL ENGINEER
CIVIL
No. 44773
EXP. 3/31/10
STATE OF CALIFORNIA

HOFFMAN/CASTLEMAN RESIDENCE
1445 EL BASQUE COURT
PACIFIC PALISADES, CA90272

FRAME ELEVATIONS

PROJECT NUMBER: 07E04
PROJ. ENGR. / CHK'D / DRAWN: NSP / / DAJ
DATE: 2009
SCALE: 1/4" = 1'-0"
SHEET NUMBER: S-9

THE ABOVE DRAWINGS, SPECIFICATIONS, AND DESIGNS ARE THE SOLE PROPERTY OF C. W. HOWE PARTNERS INC. NO PART THEREOF SHALL BE COPIED OR USED WITH ANY OTHER WORK OTHER THAN THE SPECIFIC PROJECT FOR WHICH THEY HAVE BEEN DEVELOPED, NOR SHALL THEY BE ASSIGNED TO ANY THIRD PARTY WITHOUT THE CONSENT OF C. W. HOWE PARTNERS INC.

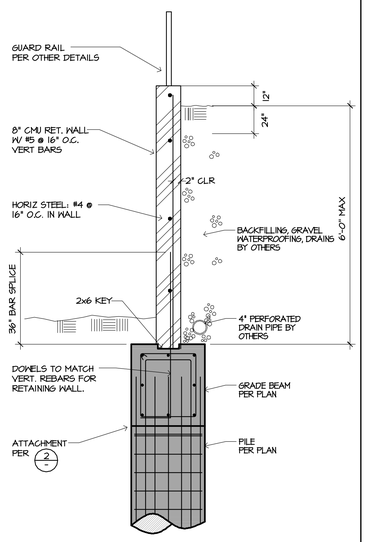

NOTE: #7 & #8 BARS MINIMUM SPLICE IS 3'4" - 5 COURSES

RETAINING WALL | 1

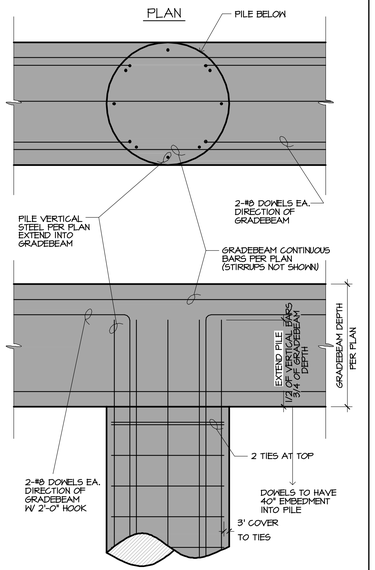

ELEVATION

FOTT-03

TYPICAL PILE TO GRADEBEAM CONNECTION | 2

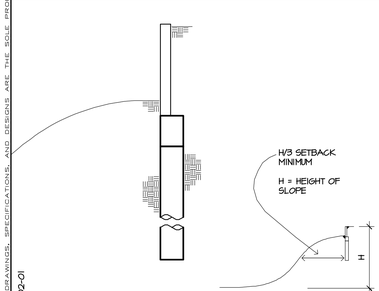

RW02-01

TYPICAL PILE SETBACK | 3

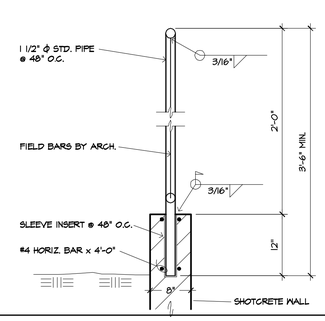

GUARDRAIL DETAIL | 4

SPECIAL INSPECTION

IN ADDITION TO THE REGULAR INSPECTIONS, THE FOLLOWING CHECKED ITEMS WILL ALSO REQUIRE SPECIAL INSPECTION IN ACCORDANCE WITH SEC. 1704 OF THE 2007 CALIFORNIA BUILDING CODE

- ☒ SOILS COMPLIANCE PRIOR TO FOUNDATION INSPECTION
- ☒ STRUCTURAL CONCRETE OVER 2500 PSI
- ☐ PRESTRESSED CONCRETE
- ☒ STRUCTURAL MASONRY
- ☐ FIELD WELDING
- ☐ MOMENT FRAME CONNECTIONS
- ☐ HIGH STRENGTH BOLTING
- ☐ EXPANSION/EPOXY ANCHORS
- ☐ SPRAYED ON FIRE-PROOFING
- ☐ SHEARWALL NAILING CLOSER THAN 4" O.C.
- ☐ OTHER_____

NAME(S) OF INDIVIDUAL(S) OR FIRM(S) RESPONSIBLE FOR THE SPECIAL INSPECTIONS LISTED ABOVE:

A.
(BY ARCHITECT/OWNER)

B.
(BY ARCHITECT/OWNER)

DUTIES OF THE SPECIAL INSPECTORS FOR THE WORK LISTED ABOVE:

A. VERIFY THAT ITEMS NOTED ABOVE ARE IN ACCORDANCE WITH DETAILS AND SPECIFICATIONS INDICATED ON THE STRUCTURAL DRAWING.

B. VERIFY THAT ITEMS NOTED ABOVE CONFORM WITH THE STANDARDS DESIGNATED BY THE UNIFORM BUILDING CODE AND ALL OTHER REQUIREMENTS SPECIFIED BY THE CITY.

RETAINING WALL SPECIFICATIONS (CONTINUED)

10) MAXIMUM UPHILL SLOPE BEHIND WALL (UNLESS NOTED OTHERWISE) SHALL BE 1 (VERTICAL) TO 3 (HORIZONTAL).

11) A FOUR INCH (4") MINIMUM DIAMETER PERFORATED DRAIN PIPE (WITH PERFORATIONS PLACED DOWNWARD) SHALL BE PLACED AT THE TOP OF THE FOOTING AND COMPLETELY SURROUNDED BY GRANULAR DRAINAGE MATERIAL (SEE NOTE NUMBER 5). DRAIN PIPE SHALL HAVE A MINIMUM 2% SLOPE TO DAYLIGHT. ALL DRAINAGE AND WATERPROOFING SPECS SHALL BE BY OTHERS.

12) BEFORE GRANULAR DRAINAGE MATERIAL AND BACKFILL IS PLACED, THE ENTIRE BACKSIDE (RETENTION SIDE) OF WALL SHALL BE THOROUGHLY WATERPROOFED.

13) A SYNTHETIC PERMEABLE FABRIC SHALL BE INSTALLED BETWEEN GRAVEL DRAINAGE MATERIAL (SEE NOTE NUMBER FOUR) AND BACKFILL MATERIAL TO PREVENT INFILTRATION OF NATIVE SOILS OR BACKFILL MATERIAL INTO DRAINAGE MATERIAL.

MASONRY

1) ALL CONCRETE BLOCK CONSTRUCTION SHALL BE SOLID GROUTED UNLESS NOTED OTHERWISE. CONSTRUCTION SHALL COMPLY WITH 2007 C.B.C. SECTION 2104.1.1 THROUGH 2104.5 AND WITH ACI 530.1.

2) CONCRETE BLOCK UNITS:
A) CONFORM TO 2007 C.B.C. SECTION 2103.1 AND ASTM C 90, HOLLOW LOAD BEARING CONCRETE UNITS.
B) CONCRETE BLOCK UNIT TO HAVE A MINIMUM COMPRESSIVE STRENGTH OF (FM) OF 1,500 PSI
C) OPEN-END MASONRY UNITS (SPEED BLOCK) ARE ACCEPTABLE WHEN NEEDED.

3) MORTAR:
A) MORTAR SHALL BE TYPE 'M' OR 'S' AND SHALL BE PROPORTIONED IN CONFORMANCE WITH 2007 C.B.C. TABLE 2103.8 (1) OR CONFORM TO PROPERTY SPECIFICATIONS PER TABLE 2103.8 (2).
B)MORTAR SHALL CONFORM TO ASTM C 270.
C) MORTAR SHALL DEVELOP A MINIMUM COMPRESSIVE STRENGTH OF 1800 P.S.I. AT 28 DAYS.

4) GROUT:
A) GROUT SHALL BE PROPORTIONED IN CONFORMANCE WITH 2007 C.B.C. TABLE 2103.12
B) GROUT SHALL DEVELOP A MINIMUM COMPRESSIVE STRENGTH OF 2000 P.S.I. AT 28 DAYS.

5) REQUIREMENTS FOR CONCRETE BLOCK CONSTRUCTION SHALL CONFORM TO THE FOLLOWING:

A) CONCRETE BLOCK CONSTRUCTION SHALL CONFORM TO 2007 C.B.C. SECTION 2104 AND ACI 530.1

B) AT THE ENDS OF ALL WALLS THERE SHALL BE A MINIMUM OF 2-#5 VERTICAL.

C) AT THE TOP OF ALL WALLS SHALL BE A MINIMUM OF 2-#4 HORIZONTALLY.

D) DOWEL CONCRETE BLOCK WALLS AND COLUMNS SUPPORTING CONCRETE WITH BARS OF THE SAME SIZE AND SPACING AS VERTICAL. SEE NOTES FOR MINIMUM LENGTH OF SPLICE.

E) BOND SHALL BE PROVIDED BY LAPPING UNITS IN SUCCESSIVE VERTICAL COURSES (RUNNING BOND), STACK BOND OR MECHANICAL ANCHRAGE SHALL NOT BE USED UNLESS SPECIFICALLY NOTED OR DETAILED.

F) AT THE TIME OF LAYING ALL MASONRY, UNITS SHALL BE FREE OF EXCESSIVE DIRT AND DUST. HOLLOW UNITS SHALL BE PLACED SUCH THAT FACE OF SHELLS OF BED JOINTS ARE FULLY MORTARED. WEBS SHALL BE FULLY MORTARED IN ALL COURSES OF PIERS, COLUMNS, PILASTERS, IN THE STARTING COURSE ON FOUNDATIONS WHERE ADJACENT CELLS OR CAVITIES ARE TO BE GROUTED, AND WHERE OTHERWISE REQUIRED. HEAD JOINTS SHALL BE MORTARED A MINIMUM DISTANCE FROM EACH FACE EQUAL TO THE FACE SHELL THICKNESS OF THE UNITS. THICKNESS OF BED JOINTS SHALL NOT EXCEED 5/8" (CBC SECTION 2105.2.2.1.2)

G) GROUTING OPERATIONS, MAXIMUM GROUT POUR HEIGHT, AND USE OF CLEAN-OUTS SHALL CONFORM TO 2007 C.B.C SECTION 2104.1.2.7 AND ACI 530. CLEANOUTS (IF REQUIRED) SHALL BE PROVIDED BY SUITABLE 'C' OPENINGS IN THE FACE SHELLS IN THE BOTTOM COURSE OF EACH CELL TO BE GROUTED, OR OTHER APPROVED LOCATIONS. THE CLEAN-OUTS SHALL BE SEALED AFTER INSPECTION AND BEFORE GROUTING.

H) GROUT SHALL BE A WORKABLE MIX SUITABLE FOR PUMPING WITHOUT SEGREGATION AND SHALL BE THOROUGHLY MIXED. GROUT SHALL BE PLACED BY PUMPING OR AN APPROVED ALTERATIVE METHOD AND SHALL BE PLACED BEFORE INITIAL SET OR HARDENING OCCURS. GROUT SHALL BE CONSOLIDATED BY MECHANICAL VIBRATION DURING PLACING AND RECONSOLIDATED AFTER EXCESS MOISTURE HAS BEEN ABSORBED BUT BEFORE WORKABILITY HAS BEEN LOST. THE GROUTING OF ANY SECTION OF A WALL SHALL BE COMPLETED IN ONE DAY WITH NO INTERRUPTIONS GREATER THAN ONE HOUR.

I) WHEN GROUTING IS STOPPED FOR ONE HOUR OR LONGER, HORIZONTAL CONSTRUCTION JOINTS SHALL BE FORMED BY STOPPING THE POUR OF GROUT APPROXIMATELY 1 1/2" ABOVE OR BELOW A BED JOINT.

6) FOR CONSTRUCTION DURING HOT WEATHER WHEN AMBIENT TEMPERATURE EXCEEDS 100 DEGRESS F , OR EXCEEDS 90 DEGRESS F WITH A WIND VELOCITY OF GREATER THAN 8 MPH PREPARATION AND CONSTRUCTION MUST CONFORM TO 2007 C.B.C. SECTION 2104.4.

7) BLOCK WALLS SHALL HAVE A MINIMUM OF #5 @ 24" O.C. VERTICAL STEEL AND #4 @ 24" OC. HORIZONTAL STEEL, UNLESS NOTED OTHERWISE ON PLANS.

8) ALL WALL CORNERS AND ENDS SHALL HAVE 2-#5 BARS AS JAMB STEEL MINIMUM UNLESS NOTED OTHERWISE.

9) BLOCK RETAINING WALLS MAY BE BACKFILLED BEFORE THE GROUT IS 28 DAYS OLD IF TEST RESULTS SUBSTANTIATE THAT THE 2000 PSI COMPRESSIVE STRENGTH HAS BEEN REACHED.

10) MASONRY WALLS DESIGNED TO BE EVENTUALLY RESTRAINED AT THE TOP (I.E. BY A CONCRETE DECK) SHALL REQUIRE BRACING CLOSE TO THE TOP OF THE WALL IF BACKFILLED PRIOR TO THE CONCRETE DECK INSTALLATION.

11) CONTINUOUS SPECIAL INSPECTION AS REQUIRED OR SPECIFIED SHALL CONFORM TO 2007 CBC SECTION 2105.3 AND SECTION 1704.5. SPECIAL INSPECTION SERVICES SHALL BE PROVIDED BY AN I.C.B.O. CERTIFIED DEPUTY INSPECTOR OR BUILDING DEPARTMENT APPROVED ENGINEER.

12) AT ALL SPLICES IN REINFORCING (STAGGER SPLICES), LAP (MINIMUM) BARS 40 BAR DIAMETERS.
THE MINIMUM RADIUS OF BEND FOR REINFORCING STEEL (MEASURED ON THE INSIDE OF THE BAR) SHALL BE AS FOLLOWS:
#3 := 1'-1/5" #4 := 2" #5 := 2.5" #6 := 4.5"

13) UNLESS SPECIFICALLY DETAILED OR NOTED OTHERWISE, VERTICAL CONTROL JOINTS SHALL BE PROVIDED IN ALL CONCRETE BLOCK WALLS PER THE LESSER OF:
1) 25'-0" O.C.
2) LENGTH TO HEIGHT RATIO OF 1.5, (I.E. IF HEIGHT IS 8'-0" HIGH, THE SPACING WOULD BE 12'-0", THE GOVERNING SPACING WOULD BE 12'-0")
CONTROL JOINTS SHALL EXTEND THE FULL HEIGHT OF THE WALL.

LOCATION OF ALL CONSTRUCTION/CONTROL JOINTS, OTHER THAN THOSE SPECIFIED, SHALL BE APPROVED BY THE ARCHITECT AND THE STRUCTURAL ENGINEER PRIOR TO PLACEMENT.

14) CONCRETE BLOCK WALLS (OF ONE STORY OR TALLER) SHALL BE SECURELY BRACED AND SHORED BY CONTRACTOR DURING ALL PHASES OF CONSTRUCTION

15) REINFORCEMENT SHALL BE SECURED AGAINST DISPLACEMENT PRIOR TO GROUTING USING WIRE POSITIONERS AT INTERVALS NOT EXCEEDING 200 BAR DIAMETERS.REINFORCEMENT PLACEMENT PER ACI 530.1-05 SECTION 3.4

16) CLEANOUTS SHALL BE PROVIDED FOR ALL GROUT POURS OVER 5'-0"

17) GROUT LIFTS SHALL NOT EXCEED 6'-0" AND SHALL CONFORM TO TABLE 7, SECTION 3.5 OF THE ACI 530.1-05.

18) ALL CELLS AND SPACES CONTAINING REINFORCEMENT SHALL BE FILLED WITH GROUT UNLESS NOTED OTHERWISE.

19) CONTIUOUS DEPUTY INSPECTION IS REQUIRED PER ACI 530.1 -05 ACCORDING TO LEVEL C QUALITY ASSURANCE TABLE 5. DEPUTY INSPECTOR TO VERIFY COMPRESSIVE STRENGTH OF MASONRY PRIOR TO CONSTRUCTION AND EVERY 5,000 SQ. FT. DURING CONSTRUCTION WITH EITHER THE PRISM TEST METHOD PER ASTM C 1314 AND CBC SECTION 2105.3 OR UNIT STRENGTH METHOD PER ACI 530.1-05 SECTION 1.4. SEE TABLE 5 OF ACI 530.1-05 FOR FULL LIST OF MINIMUM TESTS, SUBMITTALSAND INSPECTION. INSPECTION SHALL BE CONTINUOUS FROM BEGINNING TO END OF MASONRY CONSTRUCTION.

20) PIPES AND CONDUITS EMBEDDED IN MASONRY SHALL NOT REDUCE THE REQUIRED STRENGTH.

CONCRETE (CONTINUED)

14) THE CONTRACTOR SHALL OBTAIN APPROVAL FROM THE ARCHITECT AND THE ENGINEER PRIOR TO PLACING SLEEVES, PIPES, DUCTS, CHASES, CORING, AND OPENING ON OR THROUGH STRUCTURAL CONCRETE BEAMS, WALLS, FLOORS AND ROOF SLABS, UNLESS SPECIFICALLY NOTED OR DETAILED. ALL PIPES OR CONDUITS PASSING THROUGH CONCRETE MEMBERS SHALL BE SLEEVED WITH ANY MATERIAL NOT HARMFUL TO CONCRETE WITHIN LIMITATIONS OF THE ACI 318-05 SECTION 6.3.

15) FORMWORK DESIGN AND REMOVAL IS THE RESPONSIBILITY OF THE CONTRACTOR AND SHALL CONFORM TO 2007 C.B.C SECTION 1906.1 AND 1906.2 AND ACI 318-05 SECTION 6.1 AND 6.2.

16) FORM REMOVAL. REMOVE FORMS IN ACCORDANCE WITH THE FOLLOWING SCHEDULE:

SIDE FORMS AT FOOTINGS: MINIMUM 2 DAYS.
EDGE FORMS OF SLAB ON GRADE STRIP 1: MINIMUM 1 DAY.

17) VIBRATE ALL CONCRETE AS IT IS PLACED WITH A MECHANICAL VIBRATOR OPERATED BY EXPERIENCED PERSONNEL. THE VIBRATOR SHALL BE USED TO CONSOLIDATE THE CONCRETE, NOT TRANSPORT IT. REINFORCING STEEL AND FORMS SHALL NOT BE VIBRATED.

18) ALL CONCRETE WORK SHALL BE DONE IN ACCORDANCE WITH THE LATEST EDITION OF THE AMERICAN CONCRETE INSTITUTE (A.C.I.) BUILDING CODE (A.C.I. 318-05) AND THE LATEST EDITIONS OF THE A.C.I. MANUALS OF CONCRETE PRACTICE AND SPECIFICATIONS.

19) CONCRETE SHALL BE MAINTAINED IN A MOIST CONDITION FOR A MINIMUM OF FIVE DAYS AFTER PLACEMENT.

20) THE CONTRACTOR SHALL SUBMIT REQUESTS FOR THE USE OF ADMIXTURES TO THE ARCHITECT AND ENGINEER FOR THEIR REVIEW AND APPROVAL.

21) MIX DESIGNS SHALL BE PREPARED BY AN APPROVED TESTING LABORATORY AND SHALL BE SUBMITTED TO THE ARCHITECT AND STRUCTURAL ENGINEER FOR APPROVAL.

22) ONLY ONE GRADE OF CONCRETE SHALL BE ALLOWED ON THE PROJECT SITE AT ANY ONE TIME.

23) UNLESS SPECIFICALLY DETAILED OR NOTED OTHERWISE, CONSTRUCTION AND CONTROL JOINTS SHALL BE PROVIDED IN ALL CONCRETE SLABS, AND SHALL BE LOCATED SUCH THAT THE AREA WITHIN THE JOINTS DOES NOT EXCEED 400 SQUARE FEET (20' X 20' AREA).

24) FOR WALLS, STRUCTURAL DECKS AND COLUMNS CONCRETE STRENGTH SHALL BE VERIFIED BY STANDARD CYLINDER TESTS (IN ACCORDANCE WITH 2007 C.B.C. 1905.6) MADE BY AN APPROVED TESTING LABORATORY. THE CONTRACTOR SHALL MAINTAIN COPIES OF THE TEST REPORTS AT THE JOB SITE AND AVAILABLE FOR REVIEW AND INSPECTION BY THE BUILDING OFFICIALS. MAKE 3 TEST CYLINDERS FOR EACH DAY'S POUR. TEST EACH BATCH OF CYLINDERS AS FOLLOWS:1 AT 7 DAYS, AND 2 AT 28 DAYS.

25) SEE ARCHITECTURAL PLANS FOR LOCATIONS OF ALL DIMENSIONS, SLAB DEPRESSIONS, SLOPES, CURBS, AND CONTROL JOINTS.

26) ALL "DRYPACK" CALLED FOR UNDER BASEPLATES SHALL BE PRE-MIX SPEC CONCRETE 5000 PSI GROUT (LARR# 24468). THIS IS A DRY FACTORY-BLENDED CONCRETE MIX CONSISTING OF TYPE II PORTLAND CEMENT, SAND AND 3/8" AGGREGATE. THIS DRYPACK SHALL BE PLACED UNDER CONTINUOUS DEPUTY INSPECTION.

CONCRETE PILE / GRADE BEAM FOUNDATION NOTES

1) EXCAVATIONS FOR DRILLED CAISSONS/FRICTION PILES SHALL BE PERFORMED IN COMPLIANCE WITH ALL LOCAL GRADING CODES AND ORDINANCES AS WELL AS CALIFORNIA BUILDING CODE (C.B.C.) CHAPTER 18, AND AS RECOMMENDED BY THE PROJECT SOILS INVESTIGATION/REPORT.

2) EXCAVATIONS FOR ALL DRILLED CAISSONS/FRICTION PILES SHALL BE APPROVED BY THE PROJECT SOILS ENGINEER, CITY INSPECTOR, AND DEPUTY INSPECTOR PRIOR TO PLACING OF CONCRETE.

3) REINFORCEMENT FOR DRILLED CAISSONS/FRICTION PILES SHALL BE APPROVED BY THE PROJECT STRUCTURAL ENGINEER, CITY INSPECTOR, AND DEPUTY INSPECTOR PRIOR TO PLACING IN CAISSON/PILE EXCAVATION.

4) DE-WATER CAISSON/PILE FOOTINGS AND BUILDING EXCAVATION AS REQUIRED TO MAINTAIN DRY WORKING CONDITIONS.

5) THE CONTRACTOR SHALL BE RESPONSIBLE FOR THE DESIGN, MATERIALS, AND CONSTRUCTION OF ALL SHORING, BRACING, ETC. NECESSARY TO SUPPORT CUT AND/OR FILL BANKS, AND EXISTING STRUCTURES DURING EXCAVATION, AND THE FORMING AND PLACEMENT OF CONCRETE.

6) GRADE BEAM REINFORCEMENT:

A. STAGGER SPLICES IN HORIZONTAL REINFORCEMENT.
B. LOCATE BOTTOM BAR SPLICES AT PILES
C. LOCATE TOP BAR SPLICES IN MIDDLE ¼ SPAN LENGTH FROM PILE TO PILE.
D. SEE CONCRETE NOTES FOR MINIMUM SPLICE LENGTHS.

7) VERIFY ALL DIMENSIONS WITH ARCHITECTURAL DRAWINGS.

8) SEE SOIL REPORT BY GEOSOILS CONSULTANTS INC., JOB. NO. W.O. 5761 DATED 08-31-2005. THIS REPORT IS A PART OF THESE PLANS.

9) CONTRACTOR SHALL VERIFY ALL UTILITY EASEMENT LOCATIONS OF VARIOUS UTILITY LINES AND SHALL NOTIFY ENGINEER AND ARCHITECT OF ANY CONDITIONS EFFECTING THE EXCAVATION.

10) ALL GRADEBEAM AND PILE CONCRETE STRENGTH SHALL BE 3000 PSI WITH SPECIAL DEPUTY INSPECTION. CAISSON EMBEDMENT INTO BEDROCK, AND REINFORCEMENT PER PLANS AND SCHEDULES. CAISSON EXCAVATIONS SHALL BE INSPECTED BY THE SOIL ENGINEER AND CITY BUILDING INSPECTOR PRIOR TO PLACING REINFORCING.

RETAINING WALL SPECIFICATIONS

1) CONTRACTOR ASSUMES ALL RESPONSIBILITY FOR TEMPORARY SHORING DURING RETAINING WALL CONSTRUCTION.

2) SEE PROJECT SOILS REPORT BY GEOSOILS CONSULTANTS INC AND SPECIFIC RETAINING WALL DETAILS FOR ADDITIONAL REQUIREMENTS. PROJECT SOILS REPORT SHALL TAKE PRECEDENCE OVER THESE NOTES AND SPECIFIC RETAINING WALL DETAILS.

3) CONTRACTOR SHALL VERIFY ALL DIMENSIONS AND SITE CONDITIONS AND INFORM THE ENGINEER OF ANY DISCREPANCIES PRIOR TO COMMENCING WORK.

4) BEFORE BACKFILLING WALL, A GRANULAR DRAINAGE MATERIAL (SEE NOTE NUMBER 5) SHALL BE PLACED BEHIND THE WALL IN A CONTINUOUS 12" WIDE STRIP. THE DRAINAGE MATERIAL SHALL EXTEND THE FULL HEIGHT OF WALL UP TO 12" BELOW TOP OF THE HIGHER GRADE.

5) GRANULAR DRAINAGE MATERIAL SHALL CONSIST OF COARSE CLEAN SAND, GRAVEL, OR CRUSHED STONE, AND SHALL BE FREE OF ORGANIC MATERIAL, CLAY, OR OTHER DELETERIOUS MATERIAL.

6) DRAINAGE AND BACKFILL MATERIAL SHALL NOT BE PLACED UNTIL CONCRETE AND/OR MASONRY HAS REACHED DESIGN STRENGTH.

7) BACKFILLING AND COMPACTION:

A) FREE-STANDING WALLS: DO NOT BACKFILL WALL UNIT UNTIL SEVEN (7) DAYS (MINIMUM) AFTER SOLID GROUTING OF WALL IS COMPLETED AND REACHED DEISGN STRENGTH. BACKFILL MATERIAL SHALL BE PLACED IN CONTINUOUS (FOR ENTIRE LENGTH OF WALL) 12" LIFTS AND COMPACTED WITH LIGHTWEIGHT TAMPERS. DO NOT FRAME WOOD STUD WALLS OR JOIST FLOORS, OR POUR CONCRETE SLABS (AT TOP OF RETENTION) UNTIL SEVEN (7) DAYS (MINIMUM) AFTER BACKFILLING AND COMPACTION OPERATION IS COMPLETE.

B) TOP-RESTRAINED WALLS (STRUCTURAL CONCRETE SLAB OR WOOD FLOOR ANCHORED AT TOP OF WALL): WALL SHALL BE SECURELY SHORED AND BRACED PRIOR TO BACKFILLING AND COMPACTION OPERATION HAS BEGUN. BACKFILLING AND COMPACTION OPERATIONS MAY BEGIN AFTER WALL HAS REACHED DESIGN STRENSTH AND SHORING IS COMPLETED. BACKFILL MATERIAL SHALL BE PLACED IN CONTINUOUS (FOR ENTIRE LENGTH OF WALL) 12" LIFTS AND COMPACTED WITH LIGHTWEIGHT TAMPERS. SHORING SHALL REMAIN IN PLACE UNTIL BACKFILLING AND COMPACTION IS COMPLETED AND CONCRETE SLAB (AT TOP OF WALL) HAS REACHED DESIGN STRENGTH OR WOOD FLOOR FRAMING IS COMPLETED AND INSPECTED.

8) ALL FOOTINGS SHALL BE POURED AGAINST UNDISTURBED GROUND OR APPROVED (BY SOILS ENGINEER) FILL.

9) CONTRACTOR SHALL NOTIFY ARCHITECT/ENGINEER IF SUPERIMPOSED LOADING OCCURS FROM ADJACENT EXISTING FOUNDATIONS OR OTHER STRUCTURES WITHIN A DISTANCE EQUAL TO THE OVERALL HEIGHT OF THE WALL.

10) MAXIMUM UPHILL SLOPE BEHIND WALL (UNLESS NOTED OTHERWISE) SHALL BE 1 (VERTICAL) TO 3 (HORIZONTAL).

GENERAL (CONTINUED)

THE DISCREPANCY. ALL STRUCTURAL CONTRUCTION QUESTIONS ARE TO BE IN WRITTEN FORM AND SENT TO THE ENGINEER OF RECORD AT C.W.HOWE ASSOCIATES (FAX : (310) 838-5380) AND ALSO SENT TO THE ARCHITECT OF RECORD BY THE GENERAL CONTRACTOR AND/OR SUBCONTRACTORS.

27) STRUCTURAL OBSERVATION: WHEN THE ENGINEER OF RECORD IS REQUIRED TO PERFORM STRUCTURAL OBSERVATIONS IN THE FIELD DURING CONSTRUCTION. (SEE STRUCTURAL OBSERVATION NOTES) THE FIELD SHALL NOTIFY THE ENGINEER OF RECORD AT LEAST 48 HOURS IN ADVANCE OF THE REQUIRED STRUCTURAL OBSERVATION. CITY INSPECTION SHALL BE SCHEDULED ONE DAY AFTER ENGINEERS STRUCTURAL OBSERVATION.

FOUNDATIONS

1) SEE SOIL REPORT BY GSC GEOSOILS CONSULTANTS INC. DATED AUGUST 31, 2005, WHICH IS CONSIDERED A PART OF THESE PLANS. ALLOWABLE BEARING PRESSURE = 1,500 PSF. RECOMMENDATIONS THERIN SUPERCEDES STRUCTURAL DRAWINGS..

2) UNEXPECTED SOIL CONDITIONS: ALLOWABLE VALUES AND FOUNDATION DESIGN ARE BASED UPON SOIL CONDITIONS WHICH ARE SHOWN BY TEST BORINGS. ACTUAL SOIL CONDITIONS WHICH DEVIATE APPRECIABLY FROM THAT SHOWN IN THE TEST BORINGS SHALL BE REPORTED TO THE ARCHITECT AND ENGINEER IMMEDIATELY.

3) ALL COMPACTION, FILL, BACKFILLING, AND SITE PREPARATION REQUIREMENTS AND PROCEDURES SHALL COMPLY WITH 2007 CBC.

4) EXCAVATE TO REQUIRED DEPTHS AND DIMENSIONS (AS INDICATED IN THE DRAWINGS), CUT SQUARE AND SMOOTH WITH FIRM LEVEL BOTTOMS. CARE SHALL BE TAKEN NOT TO OVER-EXCAVATE FOUNDATION AT LOWER ELEVATION AND PREVENT DISTURBING OF SOILS AROUND HIGH ELEVATION.

5) FOOTINGS SHALL BE POURED IN NEAT EXCAVATIONS, WITHOUT SIDE FORMS WHENEVER POSSIBLE.

6) CARRY ALL FOUNDATIONS TO REQUIRED DEPTHS INTO UNDISTURBED NATURAL SOIL OR BEDROCK (AS PER STRUCTURAL DRAWINGS) AND AS VERIFIED BY THE APPROPRIATE BUILDING OFFICIAL / SOIL ENGINEER.

7) ALL FOUNDATION EXCAVATIONS SHALL BE INSPECTED AND APPROVED BY THE APPROPRIATE BUILDING OFFICIAL AND/OR A REPRESENTATIVE OF THE SOILS ENGINEER, PRIOR TO FORMING AND PLACEMENT OF REINFORCING OR CONCRETE.

8) FOUNDATIONS SHALL NOT BE POURED UNTIL ALL REQUIRED REINFORCING STEEL, FRAMING HARDWARE, SLEEVES, INSERTS, CONDUITS, PIPES, ETC. AND FORMWORK IS PROPERLY PLACED AND INSPECTED BY THE APPROPRIATE BUILDING OFFICIAL/INSPECTOR(S). IT IS THE RESPONSIBILITY OF THE CONTRACTOR IN CHARGE OF FRAMING HARDWARE TO PROPERLY POSITION 'HD' HOLDOWN BOLTS, 'CB' COLUMN BASES AND ALL OTHER CAST-IN-PLACE HARDWARE. REFER TO TYPICAL DETAILS. ALL HARDWARE TO BE SECURED PRIOR TO FOUNDATION INSPECTIONS.

9) THE SIDES AND BOTTOMS OF DRY EXCAVATIONS MUST BE MOISTENED JUST PRIOR TO PLACING CONCRETE. CONVERSELY, DE-WATER OVER-WET FOOTINGS AS REQUIRED TO PRECLUDE STANDING WATER.

REINFORCING STEEL

1) ALL REINFORCING STEEL SHALL BE DEFORMED INTERMEDIATE GRADE BARS CONFORMING TO A.S.T.M. A-615, GRADE 40 FOR #4 AND SMALLER BARS, GRADE 60 FOR LARGER BARS.

2) REINFORCING STEEL SHALL NOT BE WELDED, UNLESS SPECIFICALLY NOTED OTHERWISE. WELDING OF REINFORCING STEEL (WHERE SPECIFICALLY NOTED OR DETAILED) SHALL CONFORM TO ACI 318-05.

3) TO HOLD REINFORCING BARS IN THEIR TRUE POSITION AND PREVENT DISPLACEMENT, STANDARD TIE AND ANCHORAGE DEVICES MUST BE PROVIDED.

4) SHOP DRAWINGS FOR FABRICATION OF ANY REINFORCING STEEL SHALL BE APPROVED BY THE CONTRACTOR AND SUBMITTED TO THE ARCHITECT AND THE ENGINEER, FOR THEIR REVIEW, PRIOR TO FABRICATION.

5) STAGGER SPLICES IN REINFORCING STEEL UNLESS SPECIFICALLY NOTED OTHERWISE.

6) ALL REINFORCING BAR BENDS SHALL BE MADE COLD.

7) FABRICATION, ERECTION, AND PLACEMENT OF REINFORCING STEEL SHALL CONFORM TO CONCRETE REINFORCING STEEL INSTITUTE (C.R.S.I.) MANUAL OF STANDARD PRACTICE.

8) MINIMUM LAP SPLICE FOR ALL REINFORCING BARS AT SPLICES SHALL BE 40 BAR DIAMETERS. ALL SPLICES ARE TO BE STAGGERED. PERPENDICULAR FOOTINGS SHALL HAVE TWO SPLICE BARS AT THE TOP AND BOTTOM (24" MIN. SPLICE).

9) THE MINIMUM RADIUS OF BEND FOR REINFORCING STEEL, MEASURED ON THE INSIDE OF THE REBAR, SHALL BE AS FOLLOWS:
#3 := 1'-1/5" #4 := 2" #5 := 2.5" #6 := 4.5"

10) AT THE TIME CONRETE IS PLACED, REINFORCING SHALL BE FREE OF MUD, OIL OR OTHER NONMETALLIC COATING THAT DECREASES BOND. EPOXY COATING OF STEEL REINFORCEMENT WHEN NEEDED SHALL BE IN ACCORDANCE WITH THE STANDARDS OF ACI 318-05 SECTIONS 3.5.3.7 AND 3.5.3.8.

11) MINIMUM REINFORCING IN ALL SLABS ON GRADE SHALL BE #4 BARS AT 16" O.C. EACH WAY AT MID-DEPTH, UNLESS NOTED OTHERWISE.

CONCRETE

1) ALL APPLICABLE SECTIONS OF ACI 318 - 05 SHALL BE CONSIDERED AS A PART OF THESE SPECIFICATIONS. ALL CONCRETE WORK SHALL COMPLY WITH 2007 CALIFORNIA BUILDING CODE (C.B.C.) CHAPTER 19.

2) ALL CONCRETE SHALL HAVE A MINIMUM ULTIMATE COMPRESSIVE STRENGTH (F'C) OF 2500 P.S.I. AT TWENTY-EIGHT (28) DAYS. CONCRETE WITH ULTIMATE COMPRESSIVE STRENGTH GREATER THAN 2500PSI SHALL HAVE CONTINUOUS DEPUTIY INSPECTION. ALL CONCRETE SHALL BE REGULAR WEIGHT (UNLESS SPECIFICALLY NOTED OTHERWISE). CONCRETE IN GRADE BEAMS SHALL BE 3000 PSI AND WITH CONTINUOUS SPECIAL DEPUTY INSPECTION.

3) SPECIAL INSPECTION (AS REQUIRED OR SPECIFIED) SHALL CONFORM TO 2007 CBC SECTION 1704. SPECIAL INSPECTION SERVICES SHALL BE PROVIDED BY AN I.C.B.O. CERTIFIED DEPUTY INSPECTOR OR BUILDING DEPARTMENT APPROVED ENGINEER.

4) CEMENT SHALL CONFORM TO C.B.C. SECTION 1903 AND ACI 318-05 SECTION 3.2.1 STANDARD SPECIFICATION FOR PORTLAND CEMENT (ASTM C 150).

5) AGGREGATES SHALL CONFORM TO 2007 C.B.C. 1903 AND ACI 318-05 SECTION 3.3.2. MAXIMUM AGGREGATE SIZE SHALL BE 1-1/4". AGGREGATE SIZE FOR EXPOSED CONCRETE, SUCH AS IN SLABS, SHALL NOT EXCEED 1". GRADATION OF AGGREGATE SIZE SHALL BE PER ASTM C33, C117 AND C136.

6) WHERE NOT SPECIFICALLY DETAILED, THE MINIMUM CONCRETE COVER ON REINFORCING STEEL SHALL BE PER ACI 318-05 SECTION 4.4:

A) CONCRETE CAST AGAINST AND PERMANENTLY EXPOSED TO EARTH OR WEATHER. 3"
B) CONCRETE PLACED AGAINST FORMS, BUT EXPOSED TO EARTH OR WEATHER: 2".
C) SLABS, WALLS, AND JOISTS NOT EXPOSED TO EARTH OR WEATHER: 3/4"

8) MAXIMUM CONCRETE SLUMP SHALL BE 3 INCHES, 4 INCHES FOR CONCRETE STRUCTURAL DECKS.

9) ALL SLABS ON GRADE SHALL BE 5" THICK WITH #4 BARS AT 16" O.C., EACH WAY, AT MID DEPTH, UNLESS NOTED OTHERWISE ON PLANS. PROVIDE 10 MIL VISQUEEN VAPOR BARRIER PROTECTED BY SAND UNDER ALL SLABS AT LIVING AREAS.

10) ALL ANCHOR BOLTS USED IN CONCRETE CONSTRUCTION SHALL HAVE A MINIMUM TOTAL EMBE

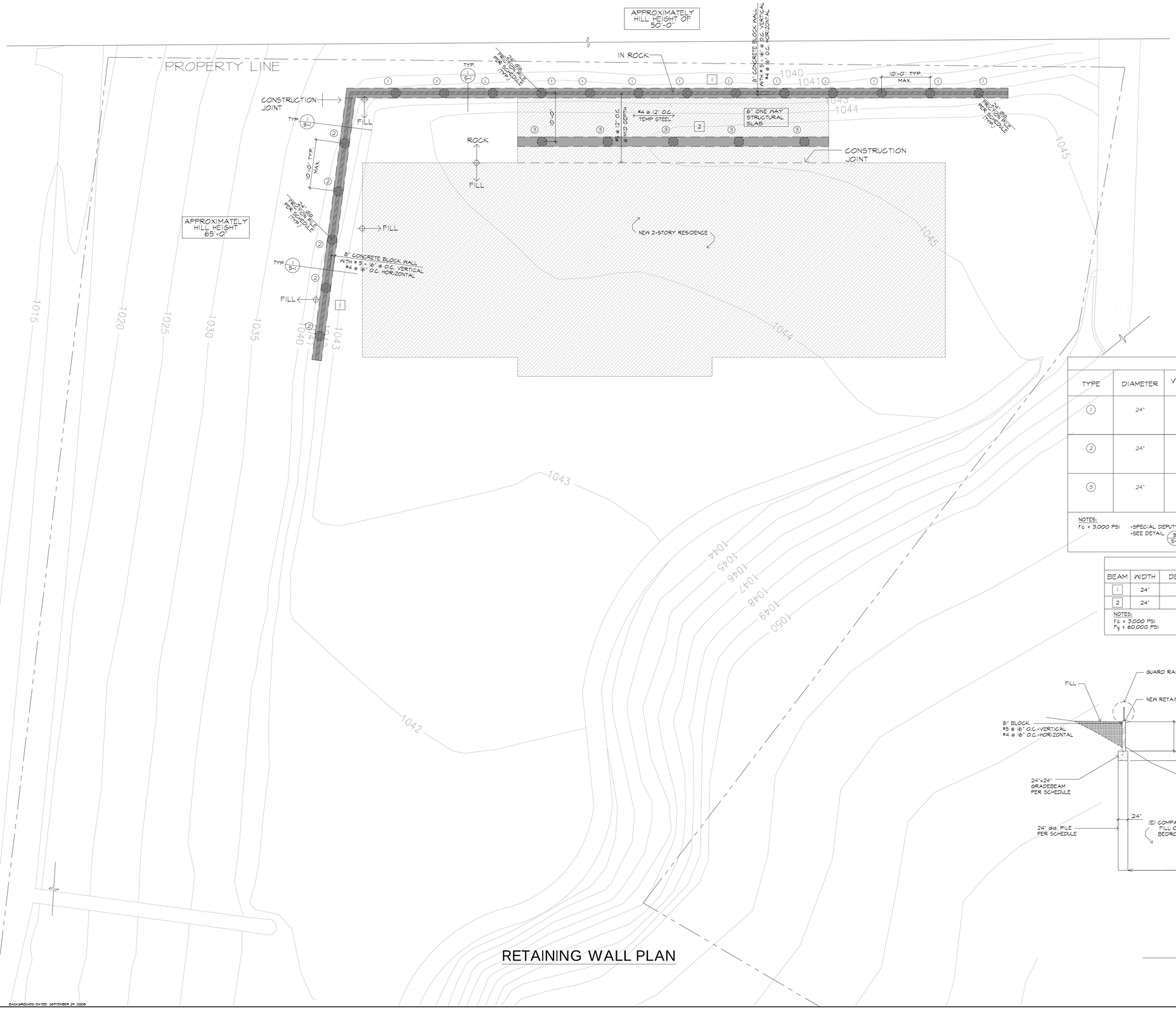

RETAINING WALL PLAN

FOUNDATION NOTES:

1. ALL CONCRETE TO BE F'c=3,000 PSI MINIMUM U.N.O., WITH SPECIAL DEPUTY INSPECTION.
2. ALL COPING, STEPS, DRAINAGE & FINISHES PER OTHERS.
3. ALL PILE EXCAVATIONS TO BE OBSERVED AND APPROVED BY SOIL ENGINEER FROM GEOSOILS CONSULTANT INC. BEFORE STRUCTURAL INSPECTION IS REQUESTED
4. STRUCTURAL ENGINEER TO INSPECT REBAR PRIOR TO PLACEMENT OF CAGES INTO PILE EXCAVATIONS.
5. SOIL REPORT #A05761 BY GEOSOILS CONSULTANT INC. IS CONSIDERED A PART OF THESE PLANS
6. SOIL ENGINEER TO VERIFY PILE MINIMUM EMBEDMENT INTO EXISTING COMPACTED FILL PER PILE SCHEDULE.
7. ◯ - PILE SYMBOL PER SCHEDULE
   □ - CONCRETE GRADEBEAM SYMBOL PER SCHEDULE
   ▨ - (N) MASONRY WALL WITH #5 @ 16" O.C. VERTICAL #4 @ 16" O.C. HORIZONTAL
8. CONTINUOUS INSPECTION BY DEPUTY INSPECTOR IS REQUIRED FOR MASONRY WALLS, GRADEBEAMS AND PILES
9. CONTRACTOR TO VERIFY ALL (E) CONDITIONS AND NOTIFY ENGINEER OF RECORD IF THERE OCCUR ANY DISCREPANCIES BETWEEN PLANS AND FIELD CONDITIONS.

PILE SCHEDULE

TYPE	DIAMETER	VERTICAL STEEL	TIES	STEEL CONF.	BEARING MATERIAL	EMBEDMENT
1	24"	8 - #8	#4 @ 8" O.C.	◯	BEDROCK	17'-6" MIN. OR H/3 SETBACK WHICHEVER IS DEEPER
2	24"	8 - #8	#4 @ 8" O.C.	◯	(E) COMPACTED FILL	16'-6" MIN. OR H/3 SETBACK WHICHEVER IS DEEPER
3	24"	8 - #5	#3 @ 8" O.C.	◯	BEDROCK	5'-0" MIN. OR H/3 SETBACK WHICHEVER IS DEEPER

NOTES:
F'c = 3,000 PSI -SPECIAL DEPUTY INSPECTION REQUIRED
-SEE DETAIL 3/S-1 FOR ALL SET BACKS

GRADE BEAM SCHEDULE

BEAM	WIDTH	DEPTH	TOP STEEL	BOTT. STEEL	FACE STEEL	TIES
1	24"	24"	3 - #6 BARS	3 - #6 BARS	1 - #6 EA FACE	#5 @ 4" O.C.
2	24"	24"	2 - #5 BARS	2 - #5 BARS	-	#3 @ 8" O.C.

NOTES:
F'c = 3,000 PSI
Fy = 60,000 PSI SPECIAL DEPUTY INSPECTION REQUIRED

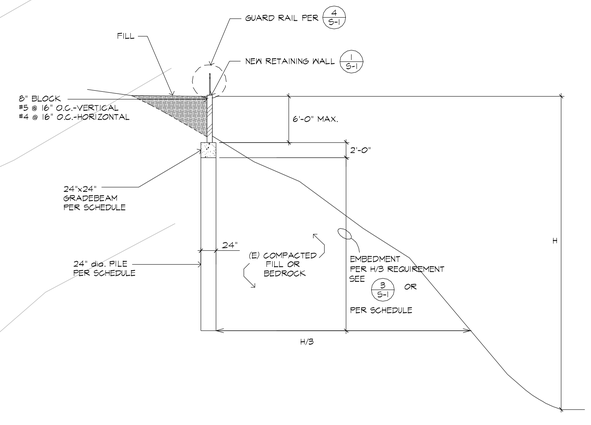

SECTION 1
1/4" = 1'-0"

REVISIONS DATE

C. W. Howe Partners Inc.
Structural Engineering Consultants
3347 Motor Avenue, Suite 200 Los Angeles, CA 90034
(310) 838-0383 tel (310) 838-5380 fax www.cwhowe.com

NOT FOR CONSTRUCTION UNTIL SIGNED BY ENGINEER
CARL W. HOWE
PROFESSIONAL ENGINEER
CIVIL
No. 44773
EXP. 3/31/10
STATE OF CALIFORNIA

HOFFMAN/CASTLEMAN RESIDENCE
1445 EL BASQUE COURT
PACIFIC PALISADES, CA 90272

RETAINING WALL PLAN

PROJECT NUMBER : 07E04
PROJ. ENG. / CHECK / DRAWN: NSP / / DAJ
DATE : 2008
SCALE : 1/8" = 1'-0"
SHEET NUMBER : S-2

THE ABOVE DRAWINGS, SPECIFICATIONS, AND DESIGNS ARE THE SOLE PROPERTY OF C. W. HOWE PARTNERS INC. NO PART THEREOF SHALL BE COPIED OR USED WITH ANY OTHER WORK OTHER THAN THE SPECIFIC PROJECT FOR WHICH THEY HAVE BEEN DEVELOPED, NOR SHALL THEY BE ASSIGNED TO ANY THIRD PARTY WITHOUT THE CONSENT OF C. W. HOWE PARTNERS INC.

PRINTED: MARCH 6, 2009 BACKGROUNDS DATED: SEPTEMBER 24, 2008

PRELIMINARY
NOT FOR CONSTRUCTION

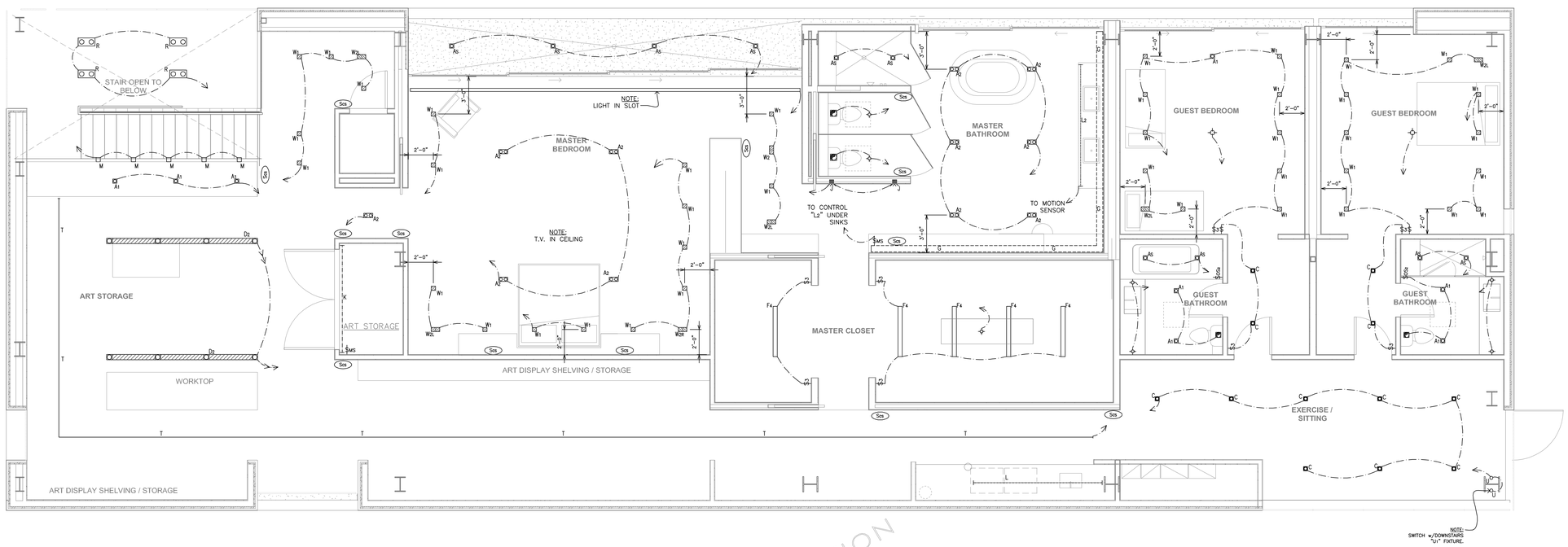

NOTE:	
Scs	THIS SYMBOL TO SIGNIFY SYSTEM KEYPADS

$DS DOOR SWITCH
Scs SYSTEM CONTROL STATION
$.R. SYSTEM REMOTE
$MS MOTION SENSOR
$OS OCCUPANCY SENSOR
U.C. UNDER CABINET LIGHTING
C CLOCK OUTLET @ +60"

LIGHTING PLAN - 2nd. FLOOR

SCALE: 1/4" = 1'-0"

PRELIMINARY
NOT FOR CONSTRUCTION

NOTICE

REVISION

1 .....

W. Scott Hale Lighting Design
925 Sandpiper Court Ventura, California 93001
e-mail: lightingbyscott@aol.com (805) 444-1886 Fax: (805) 644-7031

2nd. FLOOR LIGHTING PLAN

SCALE: 1/4" = 1'-0"

CAD FILE:

DATE:

CUSTOMER:

HOFFMAN CASTLEMAN RESIDENCE
1445 El Bosque Street,
Pacific Palisades, CA

JOB: hoffman castleman

SHEET: L-2

04/08/09

PRELIMINARY
NOT FOR CONSTRUCTION

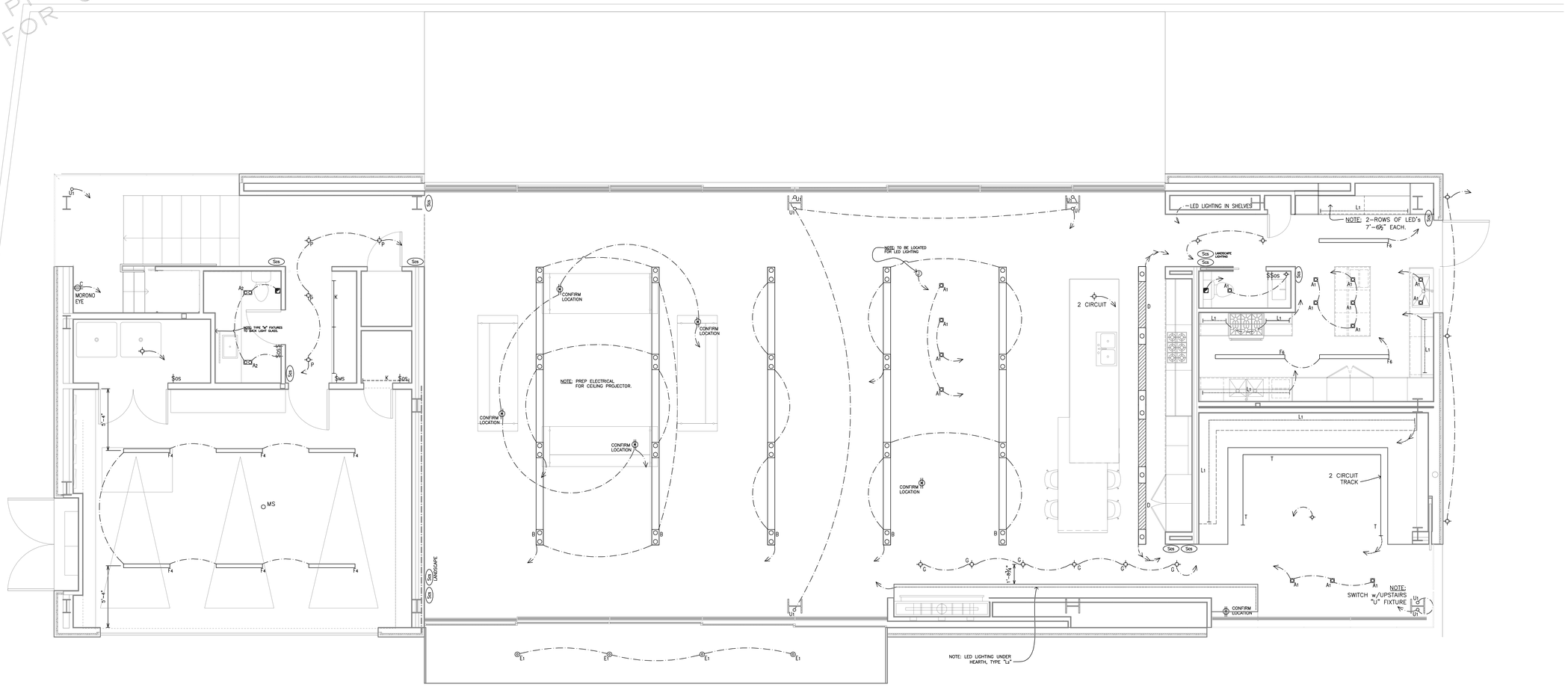

NOTE:	
Scs	THIS SYMBOL TO SIGNIFY SYSTEM KEYPADS

$DS DOOR SWITCH
Scs SYSTEM CONTROL STATION
$.R. SYSTEM REMOTE
$MS MOTION SENSOR
$OS OCCUPANCY SENSOR
U.C. UNDER CABINET LIGHTING
CLOCK OUTLET @ +60"

LIGHTING PLAN - 1st. FLOOR

SCALE: 1/4" = 1'-0"

PRELIMINARY
NOT FOR CONSTRUCTION

NOTICE

REVISION

1 .....

W. Scott Hale Lighting Design
925 Sandpiper Court Ventura, California 93001
e-mail: lightingbyscott@aol.com (805) 444-1886 Fax: (805) 644-7031

1st. FLOOR LIGHTING PLAN

SCALE: 1/4" = 1'-0"

CAD FILE:

DATE:

CUSTOMER:

HOFFMAN CASTLEMAN RESIDENCE
1445 El Bosque Street,
Pacific Palisades, CA

JOB: hoffman castleman

SHEET: L-1

04/08/09

REFERENCE NOTES:

1. RUN CONDUIT TO OUTLET LOCATION. SEE CORRESPONDING POWER PLAN.
2. RUN CONDUIT TO SWITCH LOCATION. SEE CORRESPONDING LIGHTING PLAN.
3. INTERFACES SHALL BE LOCATED IN GARAGE NEXT TO LUTRON EQUIP.
4. DEVICES, JUNCTION BOX, FOOD WASTE DISPOSAL DISCONNECT SWITCH, ETC. ARE LOCATED IN THE CABINET BELOW THE SINK.

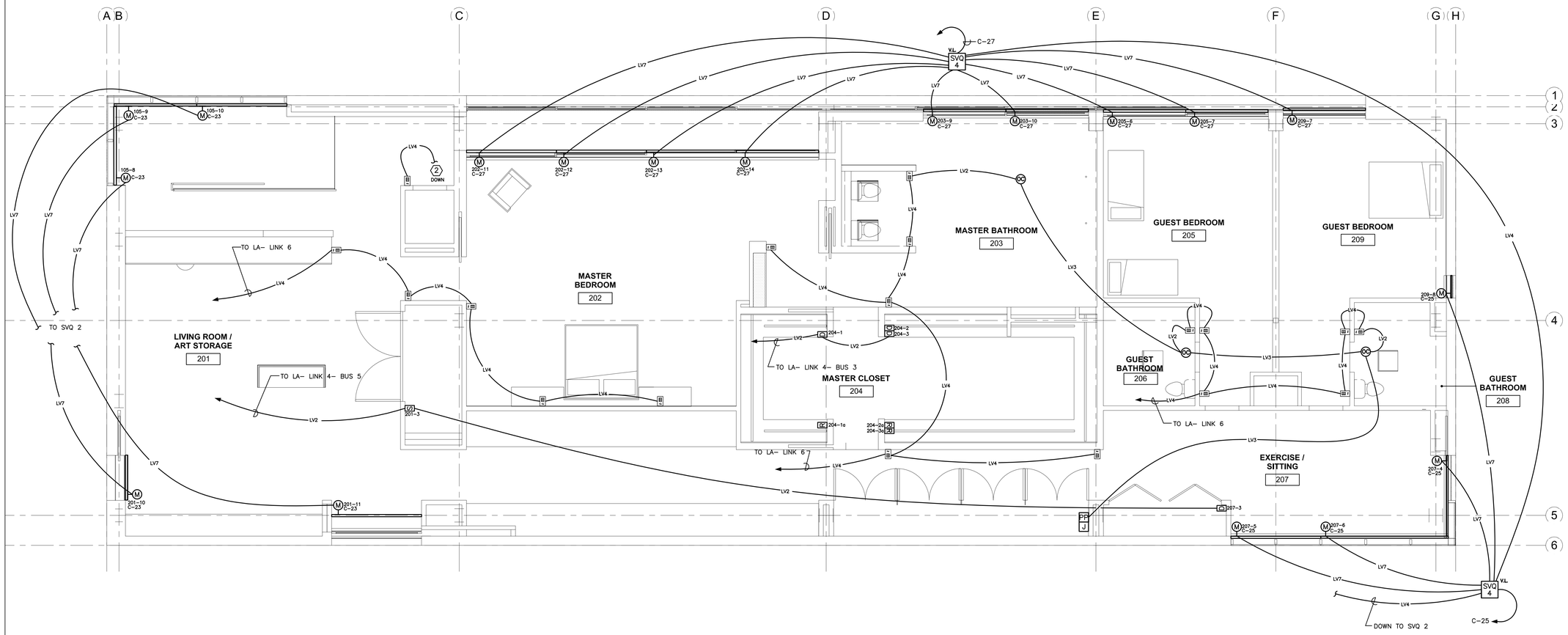

STEVEN EHRLICH Architects

10865 WASHINGTON BLVD.
CULVER CITY, 90232.3600
TEL 310.838.9700
FAX 310.838.9737
WWW.S-EHRLICH.COM

PROJECT

Hoffman Castleman Residence

1445 El Bosque Street, Pacific Palisades, CA

CONSULTANTS

VRG, INC.
CONSULTING ELECTRICAL ENGINEERS
1018 SUPERBA AVE
VENICE, CA 90291
TEL 310.399.7031
FAX 310.581.3814

NO.	DATE	REVISION

THIS DRAWING AND THE DESIGNS, ARRANGEMENTS, DEPICTIONS, IDEAS AND OTHER INFORMATION CONTAINED HEREIN CONSTITUTE UNPUBLISHED WORK OF STEVEN EHRLICH ARCHITECTS AND SHALL REMAIN PROPERTY OF STEVEN EHRLICH ARCHITECTS IN PERPETUITY. NO PART THEREOF SHALL BE REPRODUCED, COPIED, DISCLOSED, DISTRIBUTED, SOLD, PUBLISHED OR OTHERWISE USED IN ANYWAY WITHOUT THE ADVANCED EXPRESS WRITTEN CONSENT OF STEVEN EHRLICH ARCHITECTS. VISUAL CONTACT WITH THE ABOVE DRAWINGS, OR ANY PART THEREOF, SHALL CONSTITUE CONCLUSIVE EVIDENCE OF ACCEPTANCE OF THESE RESTRICTIONS.

SHEET TITLE

Second Floor Class 2 Plan

DRAWN: E.C.

SCALE: 1/4" = 1'-0"

STATUS:

DATE: 04-09-2009

FILE:

JOB:

SHEET NUMBER:

E6.02

REFERENCE NOTES:

1. RUN CONDUIT TO OUTLET LOCATION. SEE CORRESPONDING POWER PLAN.
2. RUN CONDUIT TO SWITCH LOCATION. SEE CORRESPONDING LIGHTING PLAN.
3. INTERFACES SHALL BE LOCATED IN GARAGE NEXT TO LUTRON EQUIP.
4. DEVICES, JUNCTION BOX, FOOD WASTE DISPOSAL DISCONNECT SWITCH, ETC. ARE LOCATED IN THE CABINET BELOW THE SINK.

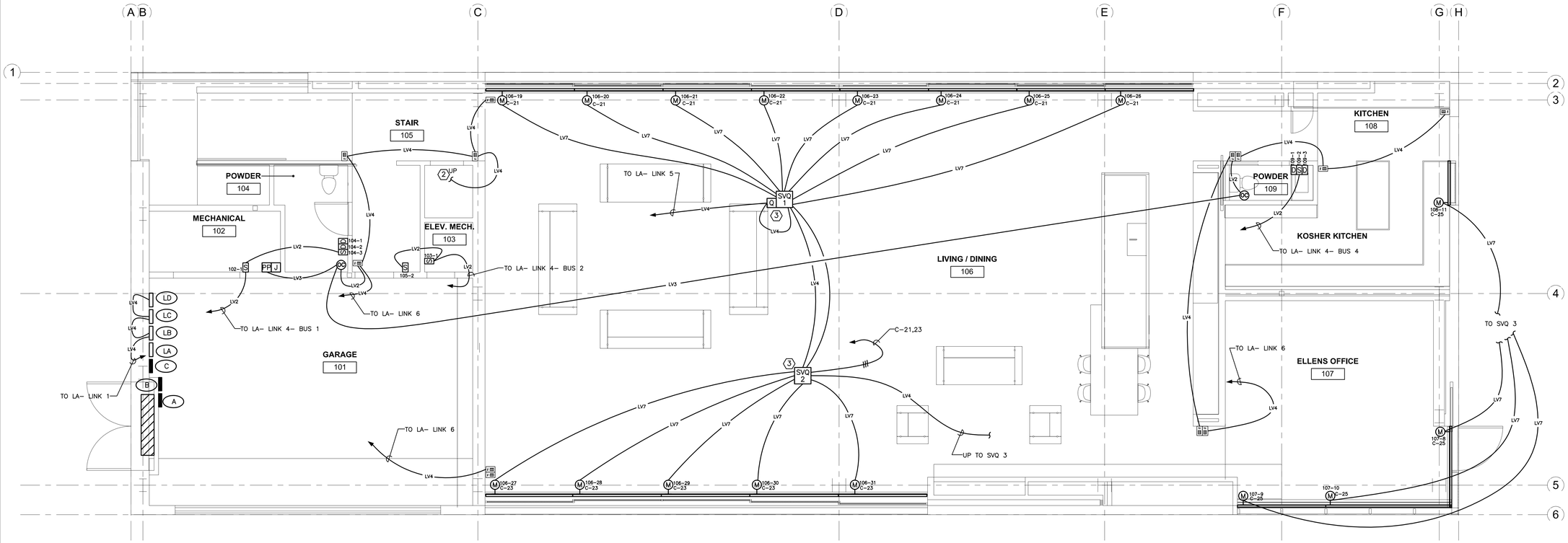

STEVEN EHRLICH Architects

10865 WASHINGTON BLVD.
CULVER CITY, 90232.3600
TEL 310.838.9700
FAX 310.838.9737
WWW.S-EHRLICH.COM

PROJECT

Hoffman Castleman Residence

1445 El Bosque Street, Pacific Palisades, CA

CONSULTANTS

VRG, INC.
CONSULTING ELECTRICAL ENGINEERS
1018 SUPERBA AVE
VENICE, CA 90291
TEL 310.399.7031
FAX 310.581.3814

NO.	DATE	REVISION

THIS DRAWING AND THE DESIGNS, ARRANGEMENTS, DEPICTIONS, IDEAS AND OTHER INFORMATION CONTAINED HEREIN CONSTITUTE UNPUBLISHED WORK OF STEVEN EHRLICH ARCHITECTS AND SHALL REMAIN PROPERTY OF STEVEN EHRLICH ARCHITECTS IN PERPETUITY. NO PART THEREOF SHALL BE REPRODUCED, COPIED, DISCLOSED, DISTRIBUTED, SOLD, PUBLISHED OR OTHERWISE USED IN ANYWAY WITHOUT THE ADVANCED EXPRESS WRITTEN CONSENT OF STEVEN EHRLICH ARCHITECTS. VISUAL CONTACT WITH THE ABOVE DRAWINGS, OR ANY PART THEREOF, SHALL CONSTITUE CONCLUSIVE EVIDENCE OF ACCEPTANCE OF THESE RESTRICTIONS.

SHEET TITLE

First Floor Class 2 Plan

DRAWN: E.C.

SCALE: 1/4" = 1'-0"

STATUS:

DATE: 04-09-2009

FILE:

JOB:

SHEET NUMBER:

E6.01

PANEL LA
(GARAGE)

Panel: HWI-PNL-8 Equipment: H8P5-MI-D48-120 PROCESSOR (Circuit C-1)

Module	ModuleType	Zone	Circuit	ZoneName	Feed	Interface	Wattage
1		1					
		2					
		3					
		4					
2		1					
		2					
		3					
		4					
3		1					
		2					
		3					
		4					
4		1					
		2					
		3					
		4					
5		1					
		2					
		3					
		4					
6		1					
		2					
		3					
		4					
7	HW-RPM-4R	1	108-3	108 Kitchen / 108-3 Entry Fluorescent		None	156 W
		2	108-8	108 Kitchen / 108-8 Kosher Fluorescents		None	312 W
		3	201-2	201 Living/ Art / 201-2 Channel Fluorescents		None	468 W
		4					
					C-33	Total Wattage	936 W
8	HW-RPM-4R	1	203-7	203 Master Bath / 203-7 Exhaust Fan (EF-3)		None	60 W
		2	206-4	206 Guest Bath / 206-4 Exhaust Fan (EF-4)		None	70 W
		3	208-4	208 Guest Bath / 208-4 Exhaust Fan (EF-5)		None	70 W
		4					
					C-35	Total Wattage	200 W

Note for Individual Panels:
* - Zone Wattage will be increased in total wattage to take into account transformer derating (MLV, NCC loads)
** - Zones with interfaces appear As 25W in Total Wattage

PANEL LB
(GARAGE)

Panel: HWBP-8D-20-120L3 Equipment: HWI-MI-120

Module	ModuleType	Zone	Circuit	ZoneName	Interface	Wattage	Breaker 20A-1P	Volt-Amps L-1	Volt-Amps L-2
				Module Interface	Total Wattage	120 W	CONTROL	120	
1	HW-RPM-4A	1	105-1	105 Stair / 105-1 Garage Hall Decoratives	None	540 W			
		2	105-3	105 Stair / 105-3 Elevator Decorative	None	180 W			
		3	106-6	106 Living/ Dining / 106-6 Dining Table Downlights A	None	100 W			
		4	106-7	106 Living/ Dining / 106-7 Dining Table Downlights B	None	100 W			
					Total Wattage	920 W	LB-1		920
2	HW-RPM-4A	1	105-4	105 Stair / 105-4 Upper Landing Downlights	None	350 W			
		2	105-5	105 Stair / 105-5 Stair Steplights	None	125 W			
		3	105-6	105 Stair / 105-6 Stair Center Downlights	None	400 W			
		4	105-7	105 Stair / 105-7 Column Uplight	None	*50 W			
					Total Wattage	935 W	LB-2	935	
3	HW-RPM-4A	1	106-1	106 Living/ Dining / 106-1 Living Downlights A	None	600 W			
		2	106-2	106 Living/ Dining / 106-2 Living Downlights B	None	600 W			
		3	106-16	106 Living/ Dining / 106-16 Living Room Floor Outlets	NGRX-PB-WH **	360 W	B-33		
		4	106-17	106 Living/ Dining / 106-17 Fireplace Floor Outlet	NGRX-PB-WH **	1500 W	B-31		
					Total Wattage	1250 W	LB-3		1250
4	HW-RPM-4A	1	106-3	106 Living/ Dining / 106-3 Living Downlights C	None	600 W			
		2	106-14	106 Living/ Dining / 106-14 Fireplace Decoratives	None	600 W			
		3	203-3	203 Master Bath / 203-3 Cove Lights	GRX-FDBI-16A-120 **	960 W	C-11		
		4	203-8	203 Master Bath / 203-8 Vertical Wall Strip Lights	GRX-FDBI-16A-120 **	234 W	C-11		
					Total Wattage	1250 W	LB-4	1250	
5	HW-RPM-4A	1	106-4	106 Living/ Dining / 106-4 Dining Downlights A	None	600 W			
		2	106-5	106 Living/ Dining / 106-5 Dining Downlights B	None	600 W			
		3	106-12	106 Living/ Dining / 106-12 Kitchen Fluorescents	GRX-FDBI-16A-120 **	432 W	C-9		
		4	107-7	107 Ellen's Office / 107-7 Switched Outlets	NGRX-PB-WH **	360 W	B-29		
					Total Wattage	1250 W	LB-5		1250
6	HW-RPM-4A	1	106-8	106 Living/ Dining / 106-8 Dining Table LED	None	60 W			
		2	106-9	106 Living/ Dining / 106-9 Island Decorative A	None	180 W			
		3	106-10	106 Living/ Dining / 106-10 Island Decorative B	None	180 W			
		4	106-11	106 Living/ Dining / 106-11 Kitchen Downlights	None	600 W			
					Total Wattage	1032 W	LB-6	1032	
7	HW-RPM-4A	1	107-1	107 Ellen's Office / 107-1 Decorative	None	240 W			
		2	107-2	107 Ellen's Office / 107-2 Downlights	None	150 W			
		3	106-13	106 Living/ Dining / 106-13 Column Uplights	None	*250 W			
		4	106-15	106 Living/ Dining / 106-15 Fireplace Hearth Strip	GRX-TVI**	132 W	LB-7		
					Total Wattage	847 W	LB-7		847
8	HW-RPM-4A	1	107-5	107 Ellen's Office / 107-5 Column Uplight	None	*50 W			
		2	108-2	108 Kitchen / 108-2 Exterior Sconces	None	540 W			
		3	108-6	108 Kitchen / 108-6 East Sink Downlights	None	100 W			
		4	106-18	106 Living/ Dining / 106-18 Exterior Uplights	None	*200 W			
					Total Wattage	940 W	LB-8	940	
					Total V.A. Per Phase			4277	4267
					Total Connected Load =		8544	Volt-Amps	
				Volt-Amps @ 120/240V - 1 Phase - 3 Wire =		36	Amps		

Note for Individual Panels:
* - Zone Wattage will be increased in total wattage to take into account transformer derating (MLV, NCC loads)
** - Zones with interfaces appear As 25W in Total Wattage
*** - Replace breaker with an Arc-Fault Circuit Interrupter Breaker

PANEL LC
(GARAGE)

Panel: HWBP-8D-20-120L3 Equipment: HWI-MI-120

Module	ModuleType	Zone	Circuit	ZoneName	Interface	Wattage	Breaker 20A-1P	Volt-Amps L-1	Volt-Amps L-2	
				Module Interface	Total Wattage	120 W	CONTROL	120		
1	HW-RPM-4A	1	202-1	202 Master Bed / 202-1 Central Downlights	None	400 W				
		2	202-2	202 Master Bed / 202-2 Northwest Wallwashers	None	100 W				
		3	202-3	202 Master Bed / 202-3 Southwest Wallwashers	None	200 W				
		4	202-4	202 Master Bed / 202-4 Reading Lights	None	100 W				
					Total Wattage	800 W	LC-1		800	***AFCI
2	HW-RPM-4A	1	202-5	202 Master Bed / 202-5 East Bookcase Wallwashers	None	350 W				
		2	202-6	202 Master Bed / 202-6 Bath Hall Downlights	None	300 W				
		3	202-7	202 Master Bed / 202-7 Deck Downlights	None	200 W				
		4	202-8	202 Master Bed / 202-8 Slot Lights	None	500 W				
					Total Wattage	1350 W	LC-2	1350		***AFCI
3	HW-RPM-4A	1	202-9	202 Master Bed / 202-9 West Bedside Outlet	None	180 W				
		2	202-10	202 Master Bed / 202-10 East Bedside Outlet	None	180 W				
		3	205-5	205 Guest Bed / 205-5 Switched Outlets	NGRX-PB-WH **	360 W	B-37			
		4	209-6	209 Guest Bed / 209-6 Switched Outlets	NGRX-PB-WH **	360 W	B-35			
					Total Wattage	410 W	LC-3		410	***AFCI
4	HW-RPM-4A	1	205-1	205 Guest Bed / 205-1 Decorative	None	180 W				
		2	205-2	205 Guest Bed / 205-2 Perimeter Wallwashers	None	450 W				
		3	205-3	205 Guest Bed / 205-3 Southwest Wallwashers	None	200 W				
		4	201-12	201 Living / Art / 201-12 North Downlight A	None	50 W				
					Total Wattage	880 W	LC-4	880		***AFCI
5	HW-RPM-4A	1	209-1	209 Guest Bed / 209-1 Decorative	None	180 W				
		2	209-2	209 Guest Bed / 209-2 Perimeter Wallwashers	None	400 W				
		3	209-3	209 Guest Bed / 209-3 East Wallwashers	None	100 W				
		4	209-4	209 Guest Bed / 209-4 Southeast Wallwashers	None	150 W				
					Total Wattage	830 W	LC-5		830	***AFCI
6	HW-RPM-4A	1	209-5	209 Guest Bed / 209-5 Entry Downlights	None	200 W				
		2	205-4	205 Guest Bed / 205-4 Entry Downlights	None	200 W				
		3	203-5	203 Master Bath / 203-5 North W.C. Decorative	None	180 W				
		4	203-6	203 Master Bath / 203-6 South W.C. Decorative	None	180 W				
					Total Wattage	760 W	LC-6	760		***AFCI
7	HW-RPM-4A	1	206-1	206 Guest Bath / 206-1 Downlights	None	100 W				
		2	206-2	206 Guest Bath / 206-2 Vanity Sconces	None	200 W				
		3	206-3	206 Guest Bath / 206-3 Shower Lights	None	100 W				
		4	201-7	201 Living/ Art / 201-7 Hall Track A	NGRX-PB-WH **	*1500 W	C-17			
					Total Wattage	425 W	LC-7		425	
8	HW-RPM-4A	1	208-1	208 Guest Bath / 208-1 Downlights	None	100 W				
		2	208-2	208 Guest Bath / 208-2 Shower Lights	None	100 W				
		3	208-3	208 Guest Bath / 208-3 Vanity Sconces	None	200 W				
		4	201-8	201 Living/ Art / 201-8 Hall Track B	NGRX-PB-WH **	*1500 W	C-19			
					Total Wattage	425 W	LC-8	425		
					Total V.A. Per Phase			3535	2465	
					Total Connected Load =		6000	Volt-Amps		
				Volt-Amps @ 120/240V - 1 Phase - 3 Wire =		25	Amps			

Note for Individual Panels:
* - Zone Wattage will be increased in total wattage to take into account transformer derating (MLV, NCC loads)
** - Zones with interfaces appear As 25W in Total Wattage
*** - Replace breaker with an Arc-Fault Circuit Interrupter Breaker

PANEL LD
(GARAGE)

Panel: HWBP-8D-20-120L3 Equipment: HWI-MI-120

Module	ModuleType	Zone	Circuit	ZoneName	Interface	Wattage	Breaker 20A-1P	Volt-Amps L-1	Volt-Amps L-2
				Module Interface	Total Wattage	120 W	CONTROL	120	
1	HW-RPM-4A	1	108-1	108 Kitchen / 108-1 Hall Decoratives	None	360 W			
		2	108-5	108 Kitchen / 108-5 Island Downlights	None	250 W			
		3	108-4	108 Kitchen / 108-4 Back Kitchen UCL	None	*60 W			
		4	107-6	107 Ellen's Office / 107-6 Under Counter Lights	None	*104 W			
					Total Wattage	807 W	LD-1		807
2	HW-RPM-4A	1	201-1	201 Living/ Art / 201-1 Channel Downlights	None	600 W			
		2	108-7	108 Kitchen / 108-7 East Kosher U.C. Lights	None	*20 W			
		3	108-9	108 Kitchen / 108-9 South Kosher U.C. Lights	None	*32 W			
		4	108-10	108 Kitchen / 108-10 North Kosher U.C. Lights	None	*16 W			
					Total Wattage	681 W	LD-2	681	
3	HW-RPM-4A	1	201-4	201 Living/ Art / 201-4 North Downlights B	None	150 W			
		2	201-9	201 Living/ Art / 201-9 Bedroom Entry Downlight	None	100 W			
		3	203-1	203 Master Bath / 203-1 General Downlights	None	600 W			
		4	203-4	203 Master Bath / 203-4 Shower Lights	None	100 W			
					Total Wattage	950 W	LD-3		950
4	HW-RPM-4A	1	207-1	207 Exercise / 207-1 General Downlights	None	800 W			
		2	207-2	207 Exercise / 207-2 Column Uplights	None	*100 W			
		3	201-5	201 Living/ Art / 201-5 Track Lights A	NGRX-PB-WH **	*1350 W	C-13		
		4	201-6	201 Living/ Art / 201-6 Track Lights B	NGRX-PB-WH **	*1350 W	C-15		
					Total Wattage	970 W	LD-4	970	
5	HW-RPM-4A	1	105-11	105 Stair / 105-11 Morono Eye Outlet	None	180 W			
		2	203-2	203 Master Bath / 203-2 Vanity UCL	GRX-TVI**	40 W	LB-5		
		3	107-3	107 Ellen's Office / 107-3 Track Lights A	NGRX-PB-WH **	*750 W	C-29		
		4	107-4	107 Ellen's Office / 107-4 Track Lights B	NGRX-PB-WH **	*750 W	C-31		
					Total Wattage	295 W	LD-5		295
6	HW-RPM-4A	1							
		2							
		3							
		4							
					Total Wattage	0 W	LD-6		
7		1							
		2							
		3							
		4							
							LD-7		
8		1							
		2							
		3							
		4							
							LD-8		
					Total V.A. Per Phase			1771	2052
					Total Connected Load =		3823	Volt-Amps	
				Volt-Amps @ 120/240V - 1 Phase - 3 Wire =		16	Amps		

Note for Individual Panels:
* - Zone Wattage will be increased in total wattage to take into account transformer derating (MLV, NCC loads)
** - Zones with interfaces appear As 25W in Total Wattage
*** - Replace breaker with an Arc-Fault Circuit Interrupter Breaker

STEVEN EHRLICH
Architects

10865 WASHINGTON BLVD.
CULVER CITY, 90232.3600
TEL 310.838.9700
FAX 310.838.9737
WWW.S-EHRLICH.COM

PROJECT

Hoffman Castleman Residence
1445 El Bosque Street, Pacific Palisades, CA

CONSULTANTS

VRG, INC.
CONSULTING ELECTRICAL ENGINEERS
1018 SUPERBA AVE
VENICE, CA 90291
TEL 310.399.7031
FAX 310.581.3814

NO.	DATE	REVISION

THIS DRAWING AND THE DESIGNS, ARRANGEMENTS, DEPICTIONS, IDEAS AND OTHER INFORMATION CONTAINED HEREIN CONSTITUTE UNPUBLISHED WORK OF STEVEN EHRLICH ARCHITECTS AND SHALL REMAIN PROPERTY OF STEVEN EHRLICH ARCHITECTS IN PERPETUITY. NO PART THEREOF SHALL BE REPRODUCED, COPIED, DISCLOSED, DISTRIBUTED, SOLD, PUBLISHED OR OTHERWISE USED IN ANYWAY WITHOUT THE ADVANCED EXPRESS WRITTEN CONSENT OF STEVEN EHRLICH ARCHITECTS. VISUAL CONTACT WITH THE ABOVE DRAWINGS, OR ANY PART THEREOF, SHALL CONSTITUE CONCLUSIVE EVIDENCE OF ACCEPTANCE OF THESE RESTRICTIONS.

SHEET TITLE

Lutron Panel Schedules

DRAWN: E.C.
SCALE: NONE
STATUS:
DATE: 04-09-2009
FILE:
JOB:
SHEET NUMBER:

E4.02

GARAGE

PANEL A | 120/240 VOLTS | 1 PHASE | 3 WIRE | 225 AMP BUS | SURFACE MOUNTING | NEMA 1 ENCLOSURE | 10K AIC | MLO

CKT #	VA LOAD A	VA LOAD B	DESCRIPTION	OUTLETS MISC	OUTLETS REC	OUTLETS LT	CIRCUIT BREAKER PLE	CIRCUIT BREAKER TRIP	BUS	CIRCUIT BREAKER TRIP	CIRCUIT BREAKER PLE	OUTLETS LT	OUTLETS REC	OUTLETS MISC	DESCRIPTION	VA LOAD A	VA LOAD B	CKT #
1	1500		KITCHEN SMALL APPLIANCE (NORTH)		3		1	20		15	2			1	STEAM OVEN	1200		2
3		1200	WINE COOLER		1		1	20							240V		1200	4
5	1500		KITCHEN SMALL APPLIANCE (EAST)		3		1	20		20	2			1	SPEED OVEN	1500		6
7		1500	KITCHEN FOOD WASTE DISPOSAL (EAST)	1			1	20							120/ 240V		1500	8
9	1500		KITCHEN DISHWASHER (EAST)		1		1	20		30	2			1	SINGLE OVEN I	2500		10
11		1200	KITCHEN REFRIGERATOR		1		1	20							120/ 240V		2500	12
13	1200		KITCHEN FREEZER		1		1	20		30	2			1	SINGLE OVEN 2	2500		14
15		1500	KITCHEN SMALL APPLIANCE (WEST)		2		1	20							120/ 240V		2500	16
17	1500		KITCHEN SMALL APPLIANCE (WEST)		2		1	20		30	2			1	KITCHEN RANGE	2600		18
19		1500	KITCHEN FOOD WASTE DISPOSAL (SOUTH)	1			1	20							5.2 KW - 120/ 240V		2600	20
21	1500		KITCHEN DISHWASHER (SOUTH)		1		1	20		20	1		1		FRONT GATE SERVICE OUTLET	180		22
23		1500	KITCHEN RANGE HOOD	1		2	1	20		20	1			1	FRONT GATE MOTOR		1840	24
25	180		KITCHEN POWDER ROOM OUTLET		1		1	20		20	1				SPARE			26
27		1500	DINING KITCHEN FOOD WASTE DISPOSAL	1			1	20		20	1							28
29	1500		DINING KITCHEN DISHWASHER		1		1	20							SPACE			30
31		1200	DINING KITCHEN REFRIGERATOR		1		1	20										32
33	1200		DINING KITCHEN FREEZER		1		1	20										34
35		1500	DINING KITCHEN SMALL APPLIANCE		2		1	20										36
37		1500	DINING KITCHEN SMALL APPLIANCE		2		1	20										38
39		1500	DINING KITCHEN COOKTOP		1		1	20										40
41	1500		DINING KITCHEN HOOD	1			2	1	20									42
	14580	14100	SUBTOTALS													10480	12140	

Line Totals	25060	26240
Conn. KVA		51.3
Total KVA		51.3
Total AMPS		214

NOTES: 1. *ARC-FAULT CIRCUIT INTERRUPTER BREAKER

FED FROM: *MS*

GARAGE

PANEL B | 120/240 VOLTS | 1 PHASE | 3 WIRE | 225 AMP BUS | SURFACE MOUNTING | NEMA 1 ENCLOSURE | 10K AIC | MLO

	CKT #	VA LOAD A	VA LOAD B	DESCRIPTION	OUTLETS MISC	OUTLETS REC	OUTLETS LT	CIRCUIT BREAKER PLE	CIRCUIT BREAKER TRIP	BUS	CIRCUIT BREAKER TRIP	CIRCUIT BREAKER PLE	OUTLETS LT	OUTLETS REC	OUTLETS MISC	DESCRIPTION	VA LOAD A	VA LOAD B	CKT #
	1	720		ELLEN'S OFFICE OUTLETS (EAST)		4		1	20		20	1		1		FAU-1 (11.1A - 120V)	1332		2
	3		720	ELLEN'S OFFICE OUTLETS (WEST)		4		1	20		20	1		1		FAU-2 (5.8A - 120V)		696	4
	5	360		104 POWDER ROOM OUTLETS		2		1	20		20	1		1		FAU-3 (7.9A - 120V)	948		6
	7		1080	STAIR HALL OUTLETS		6		1	20		20	1		3		GARAGE OUTLETS (EAST)		540	8
	9	1127		GARAGE DOOR OPENER		1		1	20		20	1	5			ELEVATOR CAB LIGHTING	500		10
	11		1008	GARAGE/ MECH ROOM OUTLETS		6	1	1	20		20	1		3		LIVING RM/ ART STORAGE OUTLETS		540	12
	13	360		MAIN TELEPHONE SYSTEM TERMINAL		2		1	20		20	1	1	8		LIVING RM/ ART STORAGE OUTLETS	1500		14
	15		360	MAIN CATV SYSTEM TERMINAL		2		1	20		20	1		7		LIVING RM/ ART STORAGE OUTLETS		1260	16
	17	360		MAIN SECURITY SYSTEM TERMINAL		2		1	20		20	1		1		MASTER BATH JACUZZI MOTOR	1840		18
	19		506	WATER HEATER CIRC PUMP CP-1		1		1	20		20	1		1		MASTER BATH SINK OUTLET (LEFT)		180	20
	21	750		WASHING MACHINE		1		1	20		20	1		1		MASTER BATH SINK OUTLET (RIGHT)	180		22
	23		750	DRYER		1		1	20		20	1		1		MASTER BATH VANITY OUTLET		180	24
	25	180		206 GUEST BATH OUTLET		1		1	20		20	1	1	5		EXERCISE RM/ LAUNDRY CLOSET OUTLETS	950		26
	27		180	208 GUEST BATH OUTLET		1		1	20		20	1		7		EXERCISE RM/ MASTER CLOSET OUTLETS		1260	28
	29	540		107-7 ELLEN'S OFFICE/ OUTLETS INTERFACE		3		1	20		20	1		1		EXERCISE MACHINE 1	1000		30
	31		1500	106-17 DINING ROOM/ OUTLETS INTERFACE		1		1	20		20	1		1		EXERCISE MACHINE 2		1000	32
	33	900		106-16 LIVING ROOM/ OUTLETS INTERFACE		5		1	20		20	1		3		ROOF SERVICE OUTLETS	540		34
*AFCI	35		1260	209-6 GUEST BED/ OUTLETS INTERFACE		7		1	20		20	1			1	FIREPLACE POWER VENT UNIT		500	36
*AFCI	37	1080		205-5 GUEST BED/ OUTLETS INTERFACE		6		1	20		40	2			1	ELEVATOR MOTOR	1955		38
*AFCI	39		1440	MASTER BEDROOM OUTLETS		8		1	20							3 HP - 230V		1955	40
	41			SPARE				1	20		20	1	1	1		ELEVATOR PIT LIGHT/ OUTLET	280		42
		6377	8804	SUBTOTALS													11025	8111	

Line Totals	17402	16915
Conn. KVA		34.3
Total KVA		34.3
Total AMPS		143

NOTES: 1. *ARC-FAULT CIRCUIT INTERRUPTER BREAKER

FED FROM: *MS*

GARAGE

PANEL C | 120/240 VOLTS | 1 PHASE | 3 WIRE | 225 AMP BUS | SURFACE MOUNTING | NEMA 1 ENCLOSURE | 10K AIC | MLO

CKT #	VA LOAD A	VA LOAD B	DESCRIPTION	OUTLETS MISC	OUTLETS REC	OUTLETS LT	CIRCUIT BREAKER PLE	CIRCUIT BREAKER TRIP	BUS	CIRCUIT BREAKER TRIP	CIRCUIT BREAKER PLE	OUTLETS LT	OUTLETS REC	OUTLETS MISC	DESCRIPTION	VA LOAD A	VA LOAD B	CKT #	
1	240		PANEL LA LUTRON PROCESSOR	1			1	20		50	2			1	PANEL LB	4296		2	
3		648	GARAGE LIGHTING			6	1	20							↓		4241	4	
5	740		MECH RM/ POWDER RM LIGHTING	1		7	1	20		50	2			1	PANEL LC	3485		6	
7		200	KITCHEN POWDER ROOM LIGHTING	1		2	1	20							↓		2465	8	
9	432		106-12 DINING/ FLUORESCENTS INTERFACE			4	1	20		50	2			1	PANEL LD	1771		10	
11		1194	203-3, 203-8 MASTER BATH/ INTERFACES			4	1	20							↓		1922	12	
13	1620		201-5 ART/ TRACK LIGHTING INTERFACE	2			1	20		20	1			7	SMOKE DETECTORS	175		14	*AFCI
15		1620	201-6 ART/ TRACK LIGHTING INTERFACE	2			1	20		20	1	6			MASTER CLOSET LIGHTING		780	16	
17	1800		201-7 ART/ TRACK LIGHTING INTERFACE	1			1	20		20	1		2		MASTER BEDROOM TV/ LIFT	720		18	*AFCI
19		1800	201-8 ART/ TRACK LIGHTING INTERFACE	1			1	20		20	1				SPARE			20	
21	800		SVQ-1 SHADE CONTROLLER	9			1	20							SPACE			22	
23		1000	SVQ-2 SHADE CONTROLLER	8			1	20										24	
25	800		SVQ-3 SHADE CONTROLLER	9			1	20										26	
27		900	SVQ-4 SHADE CONTROLLER	9			1	20										28	
29	900		107-3 ELLEN'S OFFICE/ TRACK INTERFACE	3			1	20										30	
31		900	107-4 ELLEN'S OFFICE/ TRACK INTERFACE	3			1	20										32	
33	936		LA - MODULE 1	1			1	20										34	
35		200	LA - MODULE 2	1			1	20										36	
37			SPARE				1	20										38	
39			↓				1	20										40	
41			↓				1	20							↓			42	
	8268	8462	SUBTOTALS													10447	9408		

Line Totals	16715	17870
Conn. KVA		36.6
Total KVA		36.6
Total AMPS		152

NOTES: 1. *ARC-FAULT CIRCUIT INTERRUPTER BREAKER

FED FROM: *MS*

STEVEN EHRLICH Architects

10865 WASHINGTON BLVD.
CULVER CITY, 90232.3600
TEL 310.838.9700
FAX 310.838.9737
WWW.S-EHRLICH.COM

PROJECT

Hoffman Castleman Residence

1445 El Bosque Street, Pacific Palisades, CA

CONSULTANTS

VRG, INC.
CONSULTING ELECTRICAL ENGINEERS
1018 SUPERBA AVE
VENICE, CA 90291
TEL 310.399.7031
FAX 310.581.3814

NO.	DATE	REVISION

THIS DRAWING AND THE DESIGNS, ARRANGEMENTS, DEPICTIONS, IDEAS AND OTHER INFORMATION CONTAINED HEREIN CONSTITUTE UNPUBLISHED WORK OF STEVEN EHRLICH ARCHITECTS AND SHALL REMAIN PROPERTY OF STEVEN EHRLICH ARCHITECTS IN PERPETUITY. NO PART THEREOF SHALL BE REPRODUCED, COPIED, DISCLOSED, DISTRIBUTED, SOLD, PUBLISHED OR OTHERWISE USED IN ANYWAY WITHOUT THE ADVANCED EXPRESS WRITTEN CONSENT OF STEVEN EHRLICH ARCHITECTS. VISUAL CONTACT WITH THE ABOVE DRAWINGS, OR ANY PART THEREOF, SHALL CONSTITUE CONCLUSIVE EVIDENCE OF ACCEPTANCE OF THESE RESTRICTIONS.

SHEET TITLE

Panel Schedules

DRAWN: E.C.

SCALE: NONE

STATUS:

DATE: 04-09-2009

FILE:

JOB:

SHEET NUMBER:

E4.01

NOTES:

1. MAXIMUM FAULT CURRENT AT MAIN SWITCHBOARD EQUALS -------- AMPS
2. MAIN SWITCHBOARD "MS" SHALL HAVE A WITHSTAND RATING OF 42,000 AIC
3. EQUIPMENT WITH SERIES RATING APPLIED SHALL BE FIELD MARKED IN ACCORDANCE WITH NEC ARTICLE 110-22, AS FOLLOWS:

   "CAUTION – SERIES RATED SYSTEM 22,000 AMPS AVAILABLE. IDENTIFIED REPLACEMENT COMPONENT REQUIRED."

* 4. BREAKERS SPECIFIED ARE MANUFACTURED BY CUTLER-HAMMER.

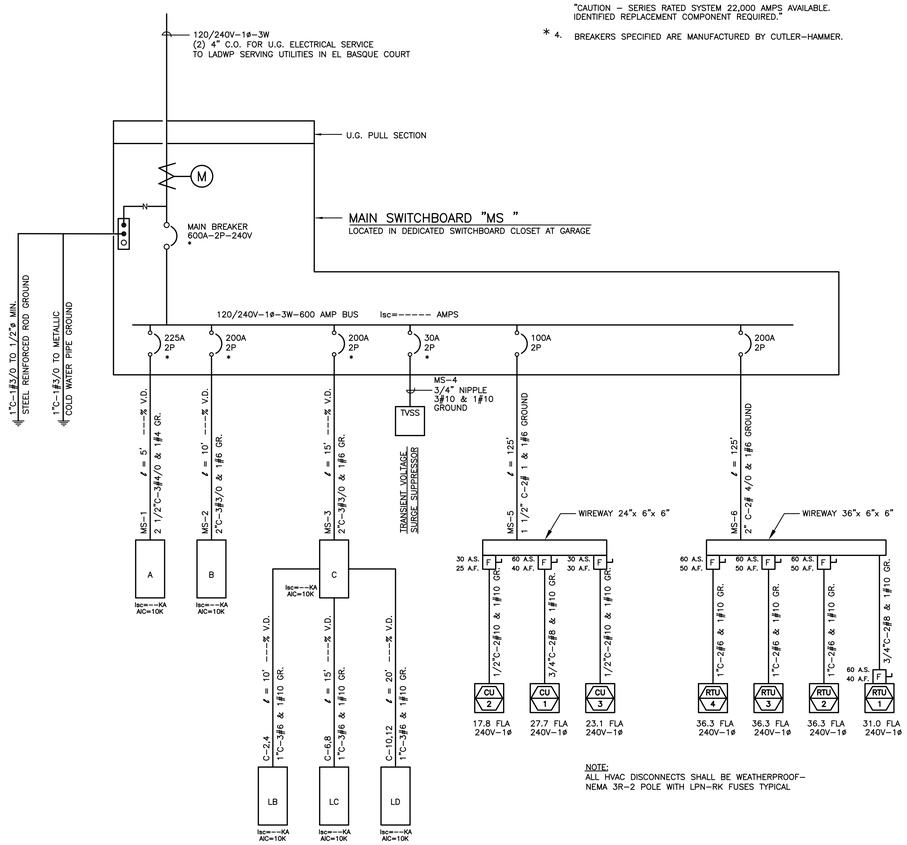

NOTE:
ALL HVAC DISCONNECTS SHALL BE WEATHERPROOF-NEMA 3R-2 POLE WITH LPN-RK FUSES TYPICAL

SINGLE LINE DIAGRAM

MAIN SWITCHBOARD "MS" SERVICE LOAD CALCULATION

100% DEMAND LOADS	*VA*
(1) 5 TON CONDENSING UNIT @ 27.7 FLA - 240V - 1 PHASE	6,648
(1) 4 TON CONDENSING UNIT @ 23.1 FLA - 240V - 1 PHASE	5,544
(1) 3 TON CONDENSING UNIT @ 17.8 FLA - 240V - 1 PHASE	4,272
(3) 5 TON HVAC PACKAGE UNITS @ 36.3 FLA - 240V - 1 PHASE EACH	26,136
(1) 4 TON HVAC PACKAGE UNIT @ 31.0 FLA - 240V - 1 PHASE	7,440
1 FORCED AIR UNIT @ 11.1A - 120V	1,332
1 FORCED AIR UNIT @ 7.9A - 120V	948
1 FORCED AIR UNIT @ 5.8A - 120V	696
TOTAL 100% DEMAND LOAD	53,016

GENERAL LOADS	*VA*
8,850 SQ. FT. @ 3 WATTS/ SQ. FT.	26,550
8 SMALL APPLIANCE CIRCUITS @ 1500 VA EACH	12,000
2 REFRIGERATORS @ 1200 VA EACH	2,400
2 FREEZERS @ 1200 VA EACH	2,400
1 WINE COOLER	1,200
3 DISHWASHERS @ 1500 VA EACH	4,500
3 FOOD WASTE DISPOSALS @ 1500 VA EACH	4,500
1 STEAM OVEN	2,400
1 SPEED OVEN	3,000
2 SINGLE OVENS @ 5.0 KW EACH	10,000
1 RANGE OVEN	5,200
2 COOKTOP/ RANGE HOOD FANS @ 1500 VA EACH	3,000
1 LAUNDRY CIRCUIT	1,500
1 GARAGE DOOR OPENER @ 1/2 HP	1,127
1 FRONT GATE MOTOR @ 1 HP	1,840
MOTORIZED SHADES	3,500
1 JACUZZI MOTOR	1,840
LANDSCAPE LIGHTING ALLOWANCE	10,000
1 WATER HEATER RECIRCULATING PUMP @ 1/6 HP	506
2 GYM EQUIPMENT CIRCUITS @ 1.0 KVA EACH	2,000
1 ELEVATOR @ 3 HP - 230V - 1 PH	3,910
AUDIO/ VIDEO EQUIPMENT ALLOWANCE	2,500
TOTAL GENERAL LOAD	105,873

SUMMARY (based on NEC Article 220.82)	***VA***
TOTAL 100% DEMAND LOAD	***53,016***
1ST 10,000 VA OF TOTAL GENERAL LOAD @ 100%	***10,000***
REMAINING VA OF TOTAL GENERAL LOAD @ 40%	***38,349***
TOTAL DEMAND LOAD	***101,365***

TOTAL DEMAND LOAD (IN AMPERES) @ 120/240V - 1 PHASE - 3 WIRE = 422

WIREWAY "AC-1" LOAD CALCULATION

LARGEST CONDENSING UNIT F.L.A.. (27.7A - 240V - 1 PHASE) @ 175 %	11.6	KVA
REMAINING (2) CONDENSING UNITS F.L.A. @ 100 %:		
1 CONDENSING UNIT @ 23.1A - 240V - 1 PHASE	5.6	KVA
1 CONDENSING UNIT @ 17.8A - 240V - 1 PHASE	4.3	KVA
TOTAL DEMAND LOAD - NEC 440-22(b)(1)	21.5	KVA

TOTAL DEMAND LOAD @ 240V - 1 PHASE = 90 AMPS

WIREWAY "AC-2" LOAD CALCULATION

LARGEST HVAC PACKAGE UNIT F.L.A.. (36.3A - 240V - 1 PHASE) @ 175 %	15.3	KVA
REMAINING (3) HVAC PACKAGE UNITS F.L.A. @ 100 %:		
2 HVAC PACKAGE UNITS @ 36.3A - 240V - 1 PHASE EACH	17.5	KVA
1 HVAC PACKAGE UNIT @ 31.0A - 240V - 1 PHASE	7.5	KVA
TOTAL DEMAND LOAD - NEC 440-22(b)(1)	40.3	KVA

TOTAL DEMAND LOAD @ 240V - 1 PHASE = 168 AMPS

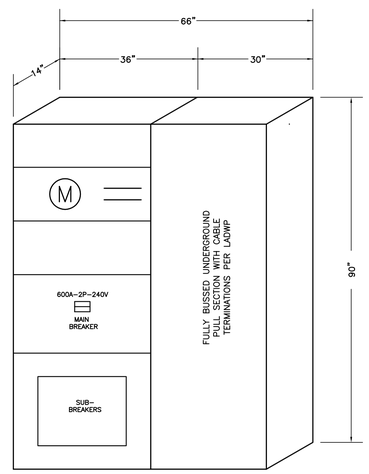

MAIN SWITCHBOARD "MS" ELEVATION
SCALE: 3/4" = 1'-0"

STEVEN EHRLICH
Architects

10865 WASHINGTON BLVD.
CULVER CITY, 90232.3600
TEL 310.838.9700
FAX 310.838.9737
WWW.S-EHRLICH.COM

PROJECT

Hoffman Castleman Residence

1445 El Bosque Street, Pacific Palisades, CA

CONSULTANTS

VRG, INC.
CONSULTING ELECTRICAL ENGINEERS
1018 SUPERBA AVE
VENICE, CA 90291
TEL 310.399.7031
FAX 310.581.3814

NO.	DATE	REVISION

THIS DRAWING AND THE DESIGNS, ARRANGEMENTS, DEPICTIONS, IDEAS AND OTHER INFORMATION CONTAINED HEREIN CONSTITUTE UNPUBLISHED WORK OF STEVEN EHRLICH ARCHITECTS AND SHALL REMAIN PROPERTY OF STEVEN EHRLICH ARCHITECTS IN PERPETUITY. NO PART THEREOF SHALL BE REPRODUCED, COPIED, DISCLOSED, DISTRIBUTED, SOLD, PUBLISHED OR OTHERWISE USED IN ANYWAY WITHOUT THE ADVANCED EXPRESS WRITTEN CONSENT OF STEVEN EHRLICH ARCHITECTS. VISUAL CONTACT WITH THE ABOVE DRAWINGS, OR ANY PART THEREOF, SHALL CONSTITUE CONCLUSIVE EVIDENCE OF ACCEPTANCE OF THESE RESTRICTIONS.

SHEET TITLE

Single Line Diagram, Equipment Elevations & Calculations

DRAWN: E.C.
SCALE: AS NOTED
STATUS:
DATE: 04-09-2009
FILE:
JOB:
SHEET NUMBER:

E3.01

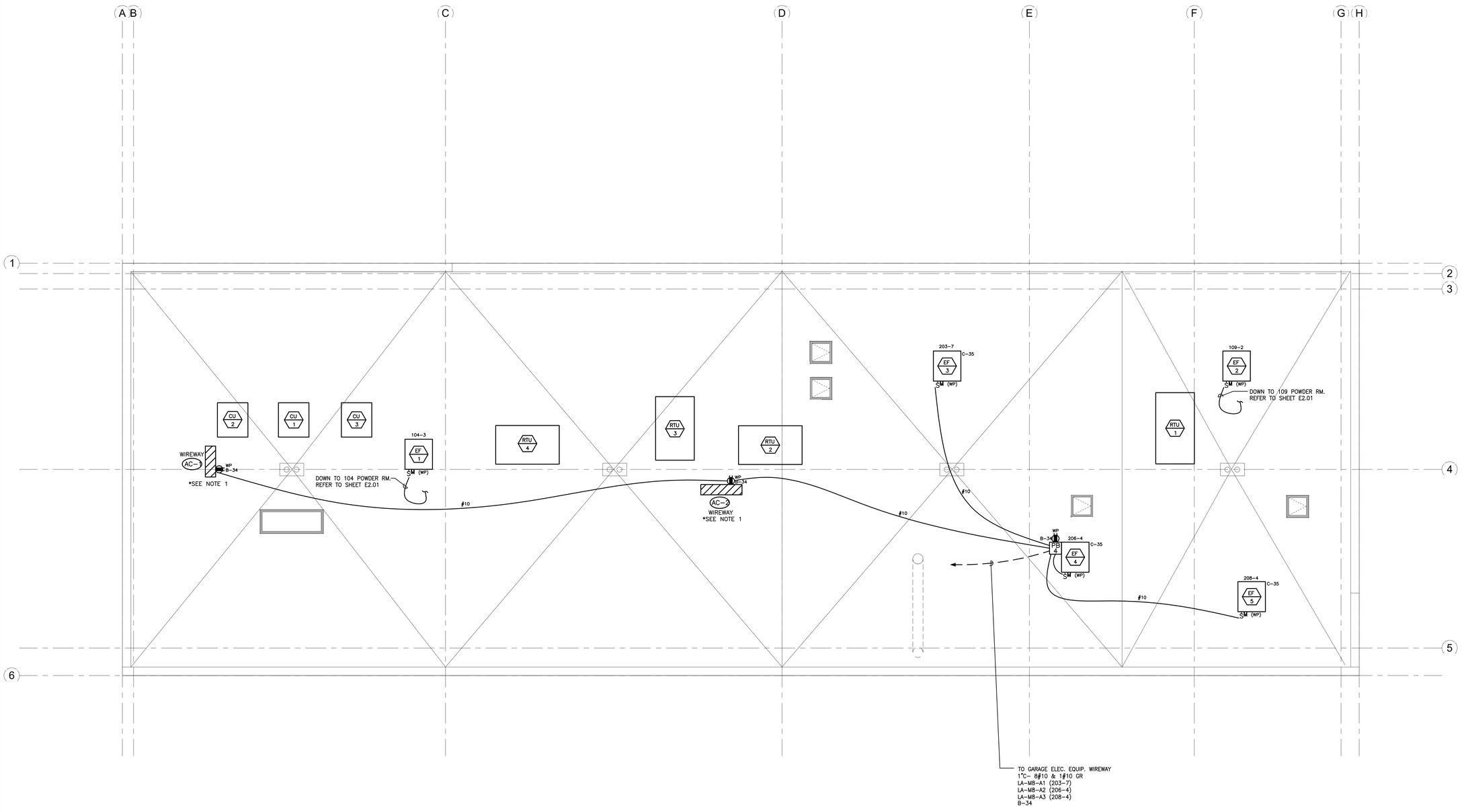

NOTES:

*1. FOR HVAC CONDENSER AND PACKAGE UNIT WIRING INFO REFER TO SHEET E3.01.

N

STEVEN EHRLICH
Architects

10865 WASHINGTON BLVD.
CULVER CITY, 90232.3600
TEL 310.838.9700
FAX 310.838.9737
WWW.S-EHRLICH.COM

PROJECT

Hoffman Castleman Residence

1445 El Bosque Street, Pacific Palisades, CA

CONSULTANTS

VRG, INC.
CONSULTING ELECTRICAL ENGINEERS
1018 SUPERBA AVE
VENICE, CA 90291
TEL 310.399.7031
FAX 310.581.3814

NO.	DATE	REVISION

THIS DRAWING AND THE DESIGNS, ARRANGEMENTS, DEPICTIONS, IDEAS AND OTHER INFORMATION CONTAINED HEREIN CONSTITUTE UNPUBLISHED WORK OF STEVEN EHRLICH ARCHITECTS AND SHALL REMAIN PROPERTY OF STEVEN EHRLICH ARCHITECTS IN PERPETUITY. NO PART THEREOF SHALL BE REPRODUCED, COPIED, DISCLOSED, DISTRIBUTED, SOLD, PUBLISHED OR OTHERWISE USED IN ANYWAY WITHOUT THE ADVANCED EXPRESS WRITTEN CONSENT OF STEVEN EHRLICH ARCHITECTS. VISUAL CONTACT WITH THE ABOVE DRAWINGS, OR ANY PART THEREOF, SHALL CONSTITUE CONCLUSIVE EVIDENCE OF ACCEPTANCE OF THESE RESTRICTIONS.

SHEET TITLE

Roof Power Plan

DRAWN: E.C.

SCALE: 1/4" = 1'-0"

STATUS:

DATE: 04-09-2009

FILE:

JOB:

SHEET NUMBER:

E2.05

REFERENCE NOTES:

1. RUN CONDUIT TO OUTLET LOCATION. SEE CORRESPONDING POWER PLAN.
2. RUN CONDUIT TO SWITCH LOCATION. SEE CORRESPONDING LIGHTING PLAN.
3. INTERFACES SHALL BE LOCATED IN GARAGE NEXT TO LUTRON EQUIP.
4. DEVICES, JUNCTION BOX, FOOD WASTE DISPOSAL DISCONNECT SWITCH, ETC. ARE LOCATED IN THE CABINET BELOW THE SINK.

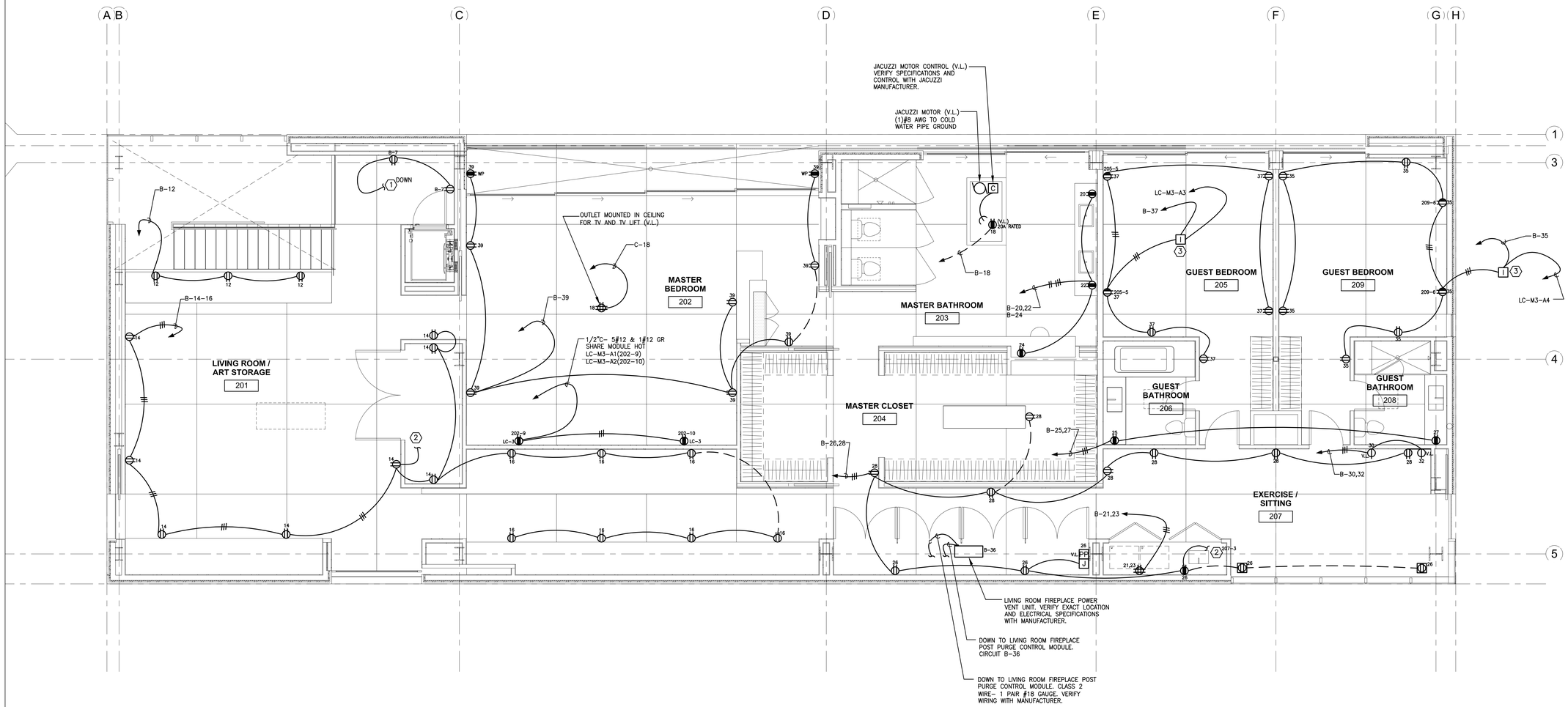

N

STEVEN EHRLICH Architects

10865 WASHINGTON BLVD.
CULVER CITY, 90232.3600
TEL 310.838.9700
FAX 310.838.9737
WWW.S-EHRLICH.COM

PROJECT

Hoffman Castleman Residence

1445 El Bosque Street, Pacific Palisades, CA

CONSULTANTS

VRG, INC.
CONSULTING ELECTRICAL ENGINEERS
1018 SUPERBA AVE
VENICE, CA 90291
TEL 310.399.7031
FAX 310.581.3814

NO.	DATE	REVISION

THIS DRAWING AND THE DESIGNS, ARRANGEMENTS, DEPICTIONS, IDEAS AND OTHER INFORMATION CONTAINED HEREIN CONSTITUTE UNPUBLISHED WORK OF STEVEN EHRLICH ARCHITECTS AND SHALL REMAIN PROPERTY OF STEVEN EHRLICH ARCHITECTS IN PERPETUITY. NO PART THEREOF SHALL BE REPRODUCED, COPIED, DISCLOSED, DISTRIBUTED, SOLD, PUBLISHED OR OTHERWISE USED IN ANYWAY WITHOUT THE ADVANCED EXPRESS WRITTEN CONSENT OF STEVEN EHRLICH ARCHITECTS. VISUAL CONTACT WITH THE ABOVE DRAWINGS, OR ANY PART THEREOF, SHALL CONSTITUE CONCLUSIVE EVIDENCE OF ACCEPTANCE OF THESE RESTRICTIONS.

SHEET TITLE

Second Floor Power Plan

DRAWN: E.C

SCALE: 1/4" = 1'-0"

STATUS:

DATE: 04-09-2009

FILE:

JOB:

SHEET NUMBER:

E2.04

REFERENCE NOTES:

1. RUN CONDUIT TO OUTLET LOCATION. SEE CORRESPONDING POWER PLAN.
2. RUN CONDUIT TO SWITCH LOCATION. SEE CORRESPONDING LIGHTING PLAN.
3. INTERFACES SHALL BE LOCATED IN GARAGE NEXT TO LUTRON EQUIP.
4. DEVICES, JUNCTION BOX, FOOD WASTE DISPOSAL DISCONNECT SWITCH, ETC. ARE LOCATED IN THE CABINET BELOW THE SINK.
5. WIREWAYS SHALL BE INSTALLED OVER ELECTRICAL BREAKER PANELS AND LIGHTING CONTROL PANELS TO ALLOW HOMERUN CONDUCTORS SHARING A COMMON RACEWAY TO BE BRANCHED OFF TO THE APPROPRIATE PANEL(S). WIREWAY SIZE SHALL CORRESPOND WITH THE REQUIREMENTS OF NEC ARTICLE 366.22. THE SUM OF CROSS SECTIONAL AREAS OF ALL CONTAINED CONDUCTORS AT ANY CROSS SECTION OF THE WIREWAY SHALL NOT EXCEED 20 PERCENT OF THE INTERIOR CROSS-SECTIONAL AREA OF THE WIREWAY.

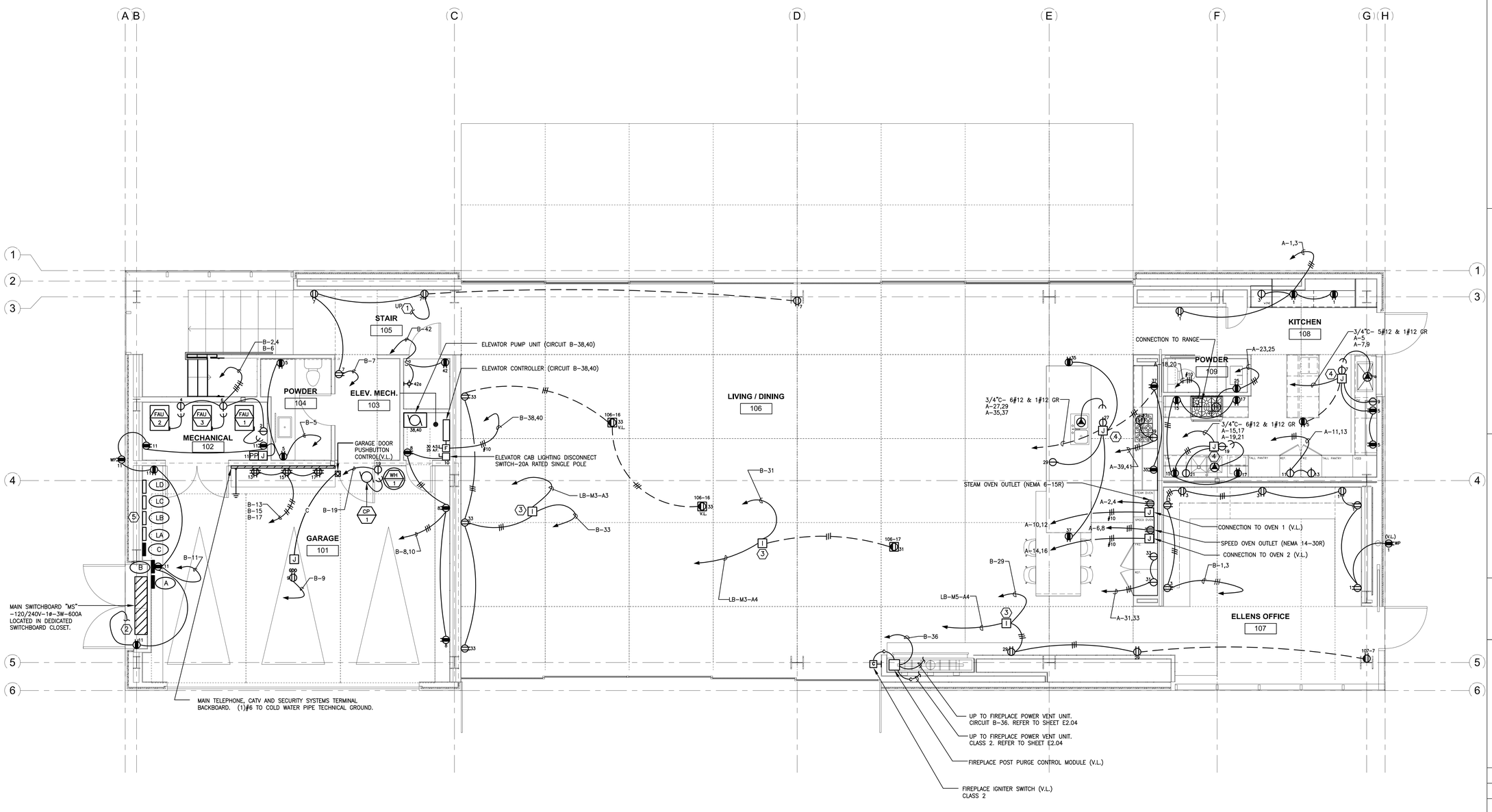

STEVEN EHRLICH Architects

10865 WASHINGTON BLVD.
CULVER CITY, 90232.3600
TEL 310.838.9700
FAX 310.838.9737
WWW.S-EHRLICH.COM

PROJECT

Hoffman Castleman Residence

1445 El Bosque Street, Pacific Palisades, CA

CONSULTANTS

VRG, INC.
CONSULTING ELECTRICAL ENGINEERS
1018 SUPERBA AVE
VENICE, CA 90291
TEL 310.399.7031
FAX 310.581.3814

NO.	DATE	REVISION

THIS DRAWING AND THE DESIGNS, ARRANGEMENTS, DEPICTIONS, IDEAS AND OTHER INFORMATION CONTAINED HEREIN CONSTITUTE UNPUBLISHED WORK OF STEVEN EHRLICH ARCHITECTS AND SHALL REMAIN PROPERTY OF STEVEN EHRLICH ARCHITECTS IN PERPETUITY. NO PART THEREOF SHALL BE REPRODUCED, COPIED, DISCLOSED, DISTRIBUTED, SOLD, PUBLISHED OR OTHERWISE USED IN ANYWAY WITHOUT THE ADVANCED EXPRESS WRITTEN CONSENT OF STEVEN EHRLICH ARCHITECTS. VISUAL CONTACT WITH THE ABOVE DRAWINGS, OR ANY PART THEREOF, SHALL CONSTITUE CONCLUSIVE EVIDENCE OF ACCEPTANCE OF THESE RESTRICTIONS.

SHEET TITLE

First Floor Power Plan

DRAWN: E.C.

SCALE: 1/4" = 1'-0"

STATUS:

DATE: 04-09-2009

FILE:

JOB:

SHEET NUMBER:

E2.03

REFERENCE NOTES:

1. RUN CONDUIT TO OUTLET LOCATION. SEE CORRESPONDING POWER PLAN.
2. RUN CONDUIT TO SWITCH LOCATION. SEE CORRESPONDING LIGHTING PLAN.
3. INTERFACES SHALL BE LOCATED IN GARAGE NEXT TO LUTRON EQUIP.
4. DEVICES, JUNCTION BOX, FOOD WASTE DISPOSAL DISCONNECT SWITCH, ETC. ARE LOCATED IN THE CABINET BELOW THE SINK.

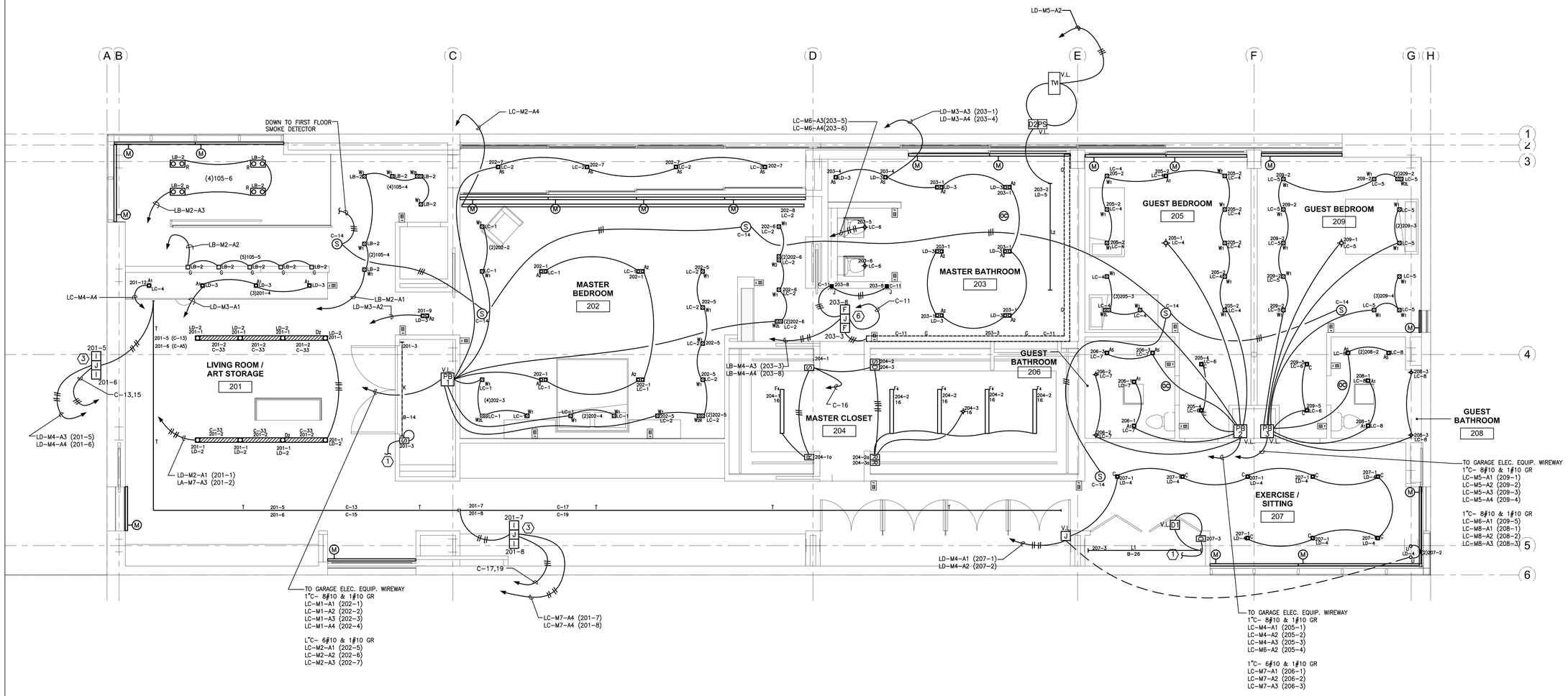

STEVEN EHRLICH Architects

10865 WASHINGTON BLVD.
CULVER CITY, 90232.3600
TEL 310.838.9700
FAX 310.838.9737
WWW.S-EHRLICH.COM

PROJECT

Hoffman Castleman Residence

1445 El Bosque Street, Pacific Palisades, CA

CONSULTANTS

VRG, INC.
CONSULTING ELECTRICAL ENGINEERS
1018 SUPERBA AVE
VENICE, CA 90291
TEL 310.399.7031
FAX 310.581.3814

NO.	DATE	REVISION

THIS DRAWING AND THE DESIGNS, ARRANGEMENTS, DEPICTIONS, IDEAS AND OTHER INFORMATION CONTAINED HEREIN CONSTITUTE UNPUBLISHED WORK OF STEVEN EHRLICH ARCHITECTS AND SHALL REMAIN PROPERTY OF STEVEN EHRLICH ARCHITECTS IN PERPETUITY. NO PART THEREOF SHALL BE REPRODUCED, COPIED, DISCLOSED, DISTRIBUTED, SOLD, PUBLISHED OR OTHERWISE USED IN ANYWAY WITHOUT THE ADVANCED EXPRESS WRITTEN CONSENT OF STEVEN EHRLICH ARCHITECTS. VISUAL CONTACT WITH THE ABOVE DRAWINGS, OR ANY PART THEREOF, SHALL CONSTITUE CONCLUSIVE EVIDENCE OF ACCEPTANCE OF THESE RESTRICTIONS.

SHEET TITLE

Second Floor Lighting Plan

DRAWN: E.C.

SCALE: 1/4" = 1'-0"

STATUS:

DATE: 04-09-2009

FILE:

JOB:

SHEET NUMBER:

E2.02

REFERENCE NOTES:

1. RUN CONDUIT TO OUTLET LOCATION. SEE CORRESPONDING POWER PLAN.
2. RUN CONDUIT TO SWITCH LOCATION. SEE CORRESPONDING LIGHTING PLAN.
3. INTERFACES SHALL BE LOCATED IN GARAGE NEXT TO LUTRON EQUIP.
4. DEVICES, JUNCTION BOX, FOOD WASTE DISPOSAL DISCONNECT SWITCH, ETC. ARE LOCATED IN THE CABINET BELOW THE SINK.
5. WIREWAYS SHALL BE INSTALLED OVER ELECTRICAL BREAKER PANELS AND LIGHTING CONTROL PANELS TO ALLOW HOMERUN CONDUCTORS SHARING A COMMON RACEWAY TO BE BRANCHED OFF TO THE APPROPRIATE PANEL(S). WIREWAY SIZE SHALL CORRESPOND WITH THE REQUIREMENTS OF NEC ARTICLE 366.22. THE SUM OF CROSS SECTIONAL AREAS OF ALL CONTAINED CONDUCTORS AT ANY CROSS SECTION OF THE WIREWAY SHALL NOT EXCEED 20 PERCENT OF THE INTERIOR CROSS-SECTIONAL AREA OF THE WIREWAY.

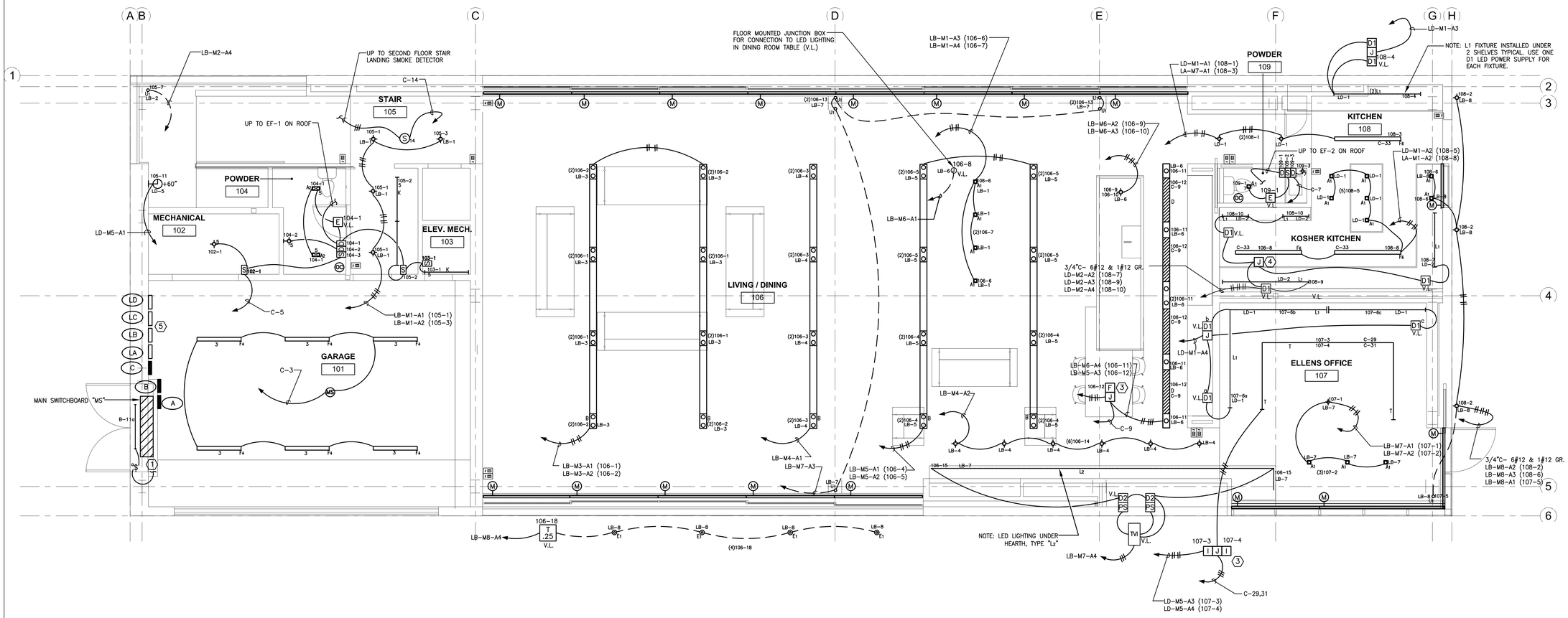

STEVEN EHRLICH Architects

10865 WASHINGTON BLVD.
CULVER CITY, 90232.3600
TEL 310.838.9700
FAX 310.838.9737
WWW.S-EHRLICH.COM

PROJECT

Hoffman Castleman Residence

1445 El Bosque Street, Pacific Palisades, CA

CONSULTANTS

VRG, INC.
CONSULTING ELECTRICAL ENGINEERS
1018 SUPERBA AVE
VENICE, CA 90291
TEL 310.399.7031
FAX 310.581.3814

NO.	DATE	REVISION

THIS DRAWING AND THE DESIGNS, ARRANGEMENTS, DEPICTIONS, IDEAS AND OTHER INFORMATION CONTAINED HEREIN CONSTITUTE UNPUBLISHED WORK OF STEVEN EHRLICH ARCHITECTS AND SHALL REMAIN PROPERTY OF STEVEN EHRLICH ARCHITECTS IN PERPETUITY. NO PART THEREOF SHALL BE REPRODUCED, COPIED, DISCLOSED, DISTRIBUTED, SOLD, PUBLISHED OR OTHERWISE USED IN ANYWAY WITHOUT THE ADVANCED EXPRESS WRITTEN CONSENT OF STEVEN EHRLICH ARCHITECTS. VISUAL CONTACT WITH THE ABOVE DRAWINGS, OR ANY PART THEREOF, SHALL CONSTITUE CONCLUSIVE EVIDENCE OF ACCEPTANCE OF THESE RESTRICTIONS.

SHEET TITLE

First Floor Lighting Plan

DRAWN: E.C.

SCALE: 1/4" = 1'-0"

STATUS:

DATE: 04-09-2009

FILE:

JOB:

SHEET NUMBER:

E2.01

NOTES:

1. FOR CONDUIT SIZE AND CONDUCTOR SPECIFICATIONS REFER TO SHEET E3.01. ALL UNDERGROUND RACEWAYS SHALL BE PVC RIGID NONMETTALLIC CONDUIT. USE SCHEDULE 40 FOR UNDERGROUND RUNS AND SCHEDULE 80 WHEN ENTERING BUILDINGS OR WHERE EXPOSED TO PHYSICAL DAMAGE. INSTALLATION SHALL COMPLY WITH NEC ARTICLE 352. INTERIOR RACEWAYS SHALL BE EMT CONDUIT. INSTALLATION SHALL COMPLY WITH NEC ARTICLE 358.

2. UNDERGROUND RACEWAYS SHALL BE BURIED PER THE MINIMUM COVER REQUIREMENTS OF NEC ARTICLE 300.5–TABLE 300.5. UNDERGROUND SERVICE ENTRANCE CONDUCTORS SHALL BE PROTECTED AGAINST PHYSICAL DAMAGE IN ACCORDANCE WITH NEC ARTICLE 230.49 AND SEALED IN ACCORDANCE WITH NEC ARTICLE 230.8.

3. PROVIDE A MINIMUM CLEARANCE OF 12", BOTH VERTICALLY AND HORIZONTALLY, BETWEEN CLASS 1 AND CLASS 2 CONDUITS.

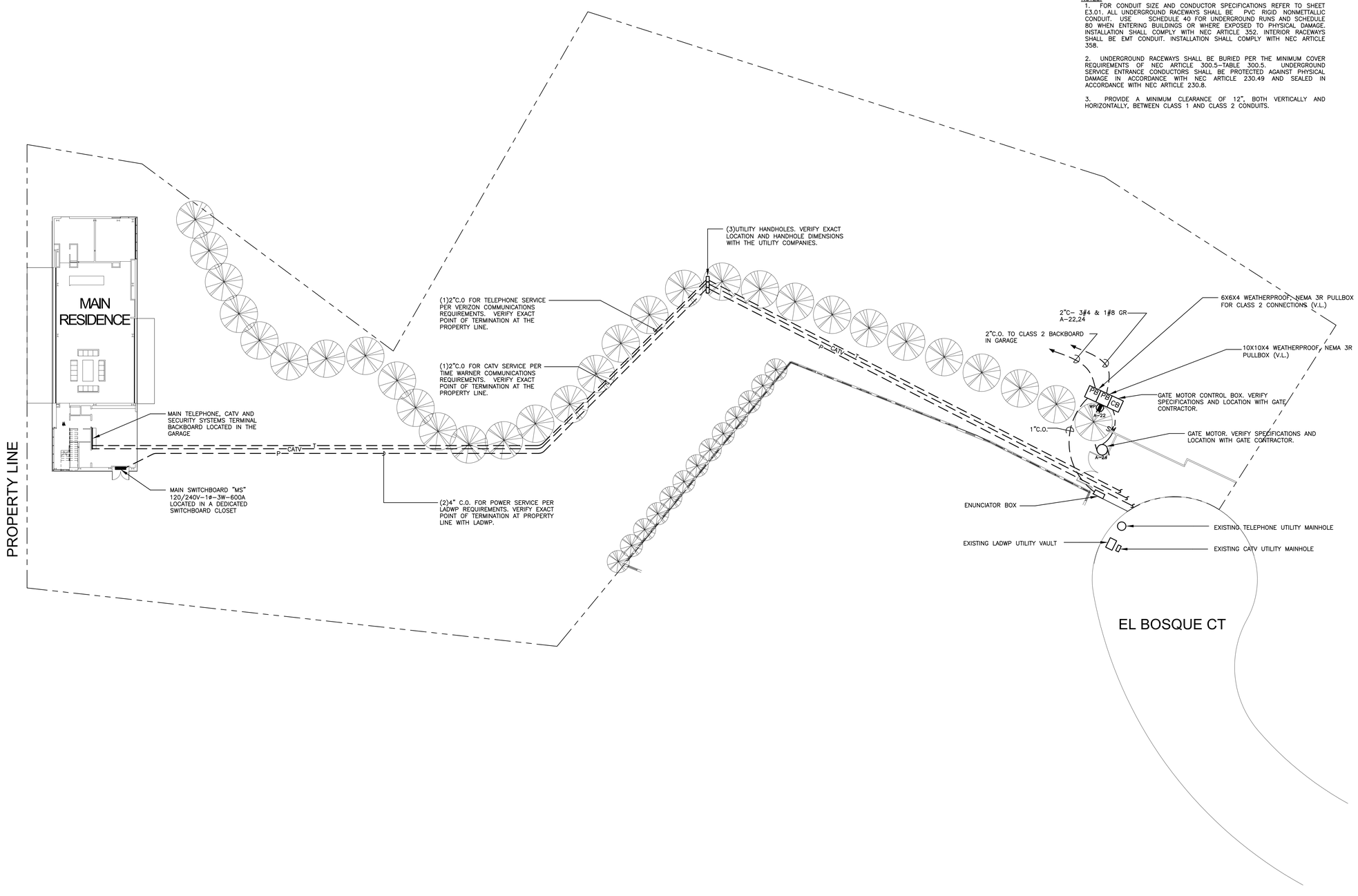

N

STEVEN EHRLICH
Architects

10865 WASHINGTON BLVD.
CULVER CITY, 90232.3600
TEL 310.838.9700
FAX 310.838.9737
WWW.S-EHRLICH.COM

PROJECT

Hoffman Castleman Residence

1445 El Bosque Street, Pacific Palisades, CA

CONSULTANTS

VRG, INC.
CONSULTING ELECTRICAL ENGINEERS
1018 SUPERBA AVE
VENICE, CA 90291
TEL 310.399.7031
FAX 310.581.3814

NO.	DATE	REVISION

THIS DRAWING AND THE DESIGNS, ARRANGEMENTS, DEPICTIONS, IDEAS AND OTHER INFORMATION CONTAINED HEREIN CONSTITUTE UNPUBLISHED WORK OF STEVEN EHRLICH ARCHITECTS AND SHALL REMAIN PROPERTY OF STEVEN EHRLICH ARCHITECTS IN PERPETUITY. NO PART THEREOF SHALL BE REPRODUCED, COPIED, DISCLOSED, DISTRIBUTED, SOLD, PUBLISHED OR OTHERWISE USED IN ANYWAY WITHOUT THE ADVANCED EXPRESS WRITTEN CONSENT OF STEVEN EHRLICH ARCHITECTS. VISUAL CONTACT WITH THE ABOVE DRAWINGS, OR ANY PART THEREOF, SHALL CONSTITUE CONCLUSIVE EVIDENCE OF ACCEPTANCE OF THESE RESTRICTIONS.

SHEET TITLE

Electrical Site Plan

DRAWN: E.C.

SCALE: 1"=20'-0"

STATUS:

DATE: 04-09-2009

FILE:

JOB:

SHEET NUMBER:

E1.01

ELECTRICAL SYMBOLS AND ABBREVIATIONS

A1 — SPECIALTY LIGHTING INDUSTRIES RECESSED ELECTRONIC LOW VOLTAGE TRIMLESS SQUARE 1–LAMP– HSG: #1009–2–MR16–APH TRIM: ZT–EX–CL–90L–WHT – 37W MR16

A2 — SPECIALTY LIGHTING INDUSTRIES RECESSED ELECTRONIC LOW VOLTAGE FLANGED SQUARE 2–LAMP– HSG: #1009–2–MR16–APH TRIM: ZT–EX–C–L90L–WHT – (2)37W MR16

A3 — SPECIALTY LIGHTING INDUSTRIES RECESSED ELECTRONIC LOW VOLTAGE FLANGED SQUARE 1–LAMP–WET LOCATION LISTED – HSG: #1009–SL–MR16–AWH–FT–EX TRIM: FL–90L–WH–95A– 37W MR16

B — RSA RECESSED TRIMLESS CHANNEL W/ ADJUSTABLE ELECTRONIC LOW VOLTAGE FIXTURES–120V– (1)75W AR111 LAMP PER HEAD

C — IRIS RECESSED INCANDESCENT TRIMLESS SQUARE LIGHT– 120V – PLATFORM: P408ICAT ELEMENT: E4DLMW LAMP MODULE: MH4BT RIMLESS: PLR4x4 – 100W BT15 E26

D — RSA RECESSED TRIMLESS CHANNEL W/ ADJUSTABLE ELECTRONIC LOW VOLTAGE FIXTURES & RECESSED 2–LIGHT DIMMABLE T5 HO FLUORESCENT FIXTURES – 120V (1)75W AR111 PER HEAD – (2)F54 T5HO 4100 DEGREE LAMPS PER FLUORESCENT FIXTURE.

D2 — RSA RECESSED TRIMLESS CHANNEL W/ ADJUSTABLE ELECTRONIC LOW VOLTAGE FIXTURES & RECESSED 2–LIGHT NON–DIMMABLE T5 HO FLUORESCENT FIXTURES – 120V (1)75W AR111 PER HEAD – (2)F54 T5HO 4100 DEGREE LAMPS PER FLUORESCENT FIXTURE.

E1 — LUMASCAPE RECESSED LOW VOLTAGE SQUARE INGRADE UPLIGHT W/ REMOTE TRANSFORMER – #LS393–GT–85–XU – 50W MR16 – 12 VOLT

F4 — ARCHITECTURAL LIGHTING WORKS 4 FOOT RECESSED TRIMLESS 2–LIGHT FLUORESCENT FIXTURE #LPLR3.5–4–54W–2–EXT–STD–120 – (2)GE F54 T5 HO 3500 DEGREE LAMPS

F6 — ARCHITECTURAL LIGHTING WORKS 6 FOOT RECESSED TRIMLESS 2–LIGHT FLUORESCENT FIXTURE #LPLR3.5–6–39W–4–EXT–STD–120 – (4)GE F39 T5 HO 3500 DEGREE LAMPS

G — ENGINEERED LIGHTING PRODUCTS DIMMABLE RECESSED/ TRIMLESS WALL SLOT FLUORESCENT FIXTURE – #254T5–SITC–WS–120 – F39/F54 T5 HO 3500 DEGREE LAMPS

J — DREAMSCAPE RECESSED TRIMLESS WALL MOUNT DIMMABLE FLUORESCENT FIXTURE #DL–9196–HO–B–3500 WM–_–E – (3)GE F39 T5 HO 3500 DEGREE LAMPS

K — BARTCO SURFACE MOUNTED, NON–DIMMABLE 4 FOOT FLUORESCENT UTILITY FIXTURE #281 W/ "LNC" LENS SERIES W/ ½" CENTER K.O. – (1) 28W T5 4100 DEGREE LAMP

L1 — LED POWER INC. LED UNDER COUNTER LIGHT FIXTURE WITH REMOTE DIMMABLE POWER SUPPLY #LB36–LENGTHS TO BE DETERMINED–WARP–100 – 4 WATTS PER FOOT – 24VDC

L2 — ALEXANDRA LIGHTING SYSTEMS INC. LED ACCENT LIGHT FIXTURE WITH REMOTE POWER SUPPLY AND DIMMING MODULE – 24L–LENGTHS TO BE DETERMINED–C–B–CLEAR–03"–LD–S – 12VDC

P — NOT USED

T — LSI RECESSED 2–CIRCUIT TRACK FIXTURE – 82300 SERIES – APPROX 30 WATTS/ PER FOOT – 120V

U — RECESSED UPLIGHT T.B.D. – 50W – 120V

U1 — RECESSED UPLIGHT T.B.D. – 50W – 120V

W1 — SPECIALTY LIGHTING INDUSTRIES RECESSED ELECTRONIC LOW VOLTAGE TRIMLESS WALLWASHER 1–LAMP– HSG: #1009–MR16–APH TRIM: ZT–EX–CL–90L–WHT – 37W MR16

W2L — SPECIALTY LIGHTING INDUSTRIES RECESSED ELECTRONIC LOW VOLTAGE TRIMLESS WALLWASHER 2–LAMP– #1240WW–2 MR16–APH – (2)50W MR16 LAMPS

SINGLE RECEPTACLE OUTLET

DUPLEX RECEPTACLE OUTLET

GDO — DUPLEX RECEPTACLE OUTLET, GROUND TYPE, FOR GARAGE DOOR OPERATOR

DUPLEX RECEPTACLE OUTLET WITH GROUND FAULT CIRCUIT INTERRUPTER

DOUBLE DUPLEX RECEPTACLE OUTLET

240V OUTLET

DUPLEX RECEPTACLE OUTLET HALF HOT

FLOOR RECEPTACLE OUTLET

FLOOR RECEPTACLE OUTLET, HALF–HOT

H — CONNECT TO LIGHT AND EXHAUST FAN IN RANGE HOOD

S — SMOKE DETECTOR. SMOKE DETECTOR BY SECURITY CONTRACTOR (REFER TO GENERAL NOTE 13).

J — JUNCTION BOX, SIZE AS NOTED, OR AS REQUIRED BY CODE

T 1.0 — MAGNETIC TRANSFORMER WITH FUSED SECONDARY 1.0 KVA (REFER TO GENERAL NOTE 17)

PB 1 — PULLBOX, SIZE AS NOTED, OR AS REQUIRED BY CODE.

$_W — SINGLE–POLE MOTOR RATED SWITCH. (REFER TO GENERAL NOTE 15).

$_W^2 — TWO–POLE MOTOR RATED SWITCH. (REFER TO GENERAL NOTE 15).

$^b — SINGLE–POLE SWITCH. "b" DENOTES OUTLET CONTROLLED

$_D — DOOR JAMB SWITCH–CLASS 2–NORMALLY OPEN

B — LUTRON "HWI–KEYPAD" CONTROL. REFER TO GENERAL NOTE 18 THIS PAGE

101–1 S — LUTRON "VAREO HWV–1000NS" LOCAL LIGHTING CONTROL SWITCH. "101–1" DENOTES THE OUTLET CONTROLLED

101–1 D — LUTRON "VAREO HWV–1000 SERIES" LOCAL LIGHTING CONTROL DIMMER. "101–1" DENOTES THE OUTLET CONTROLLED

101–1a R — LUTRON "VAREO VETS–R" LOCAL LIGHTING CONTROL FOR MULTIPLE SWITCHING/DIMMING LOCATIONS. "101–1" DENOTES OUTLET CONTROLLED

CH — CONTROL SWITCH

MS — CEILING MOUNT MOTION SENSOR–120V–20A

OS — LUTRON "LOS–C" SERIES. DUAL TECHNOLOGY CEILING MOUNT OCCUPANCY SENSOR. 24VDC CLASS 2 WITH RELAY. OCCUPANCY SENSOR SHALL BE USED IN CONJUNCTION WITH THE CORRESPONDING LUTRON KEYPAD ROOM CONTROL TO ALLOW MANUAL "ON" ,OF ROOM LIGHTING, (AT KEYPAD) AND AUTOMATIC "OFF" (FROM LUTRON "LOS–C" OCCUPANCY SENSOR) THROUGH CONDITIONAL LOGIC PROGRAMMING VIA THE LUTRON CONTROL SYSTEM PROCESSOR. CEC TITLE 24 COMPLIANT.

PP — REMOTE OCCUPANCY SENSOR POWER PACK – LUTRON – PP–120H– 120V PRIMARY TO 24VDC SECONDARY

A — PANEL A

LA — LIGHTING CONTROL PANEL "LA"

EXHAUST FAN

FOOD WASTE DISPOSAL. AIR SWITCH CONTROLLED UNLESS OTHERWISE NOTED.

T — THERMOSTAT

M — LUTRON "SIVOIA" SHADE MOTOR. VERIFY EXACT FEED POINT AND TERMINATION AT MOTOR WITH MANUFACTURER.

TC — TIME CLOCK

R — RELAY–12V COIL–120V 1 AMP RATED CONTACTS

TELEPHONE/DATA OUTLET

TELEPHONE/DATA OUTLET SET IN FLOOR OR GRADE

TV — CABLE TELEVISION OUTLET

001–1 I — LUTRON "NGRX–PB" POWER BOOSTER INTERFACE. "001–1" DENOTES THE OUTLET CONTROLLED

001–1 F — LUTRON "GRX–FDBI–16A–120" FLUORESCENT DIMMING BALLAST INTERFACE. "001–1" DENOTES THE OUTLET CONTROLLED

001–1 E — LUTRON "ELVI–1000" ELECTRONIC LOW VOLTAGE INTERFACE. "001–1" DENOTES THE OUTLET CONTROLLED

001–1 D1 — LED POWER, INC DIMMABLE LED POWER SUPPLY. 120V INPUT–24VDC OUTPUT–60W "001–1" DENOTES THE OUTLET CONTROLLED

001–1 D2 PS — ALEXANDRA LIGHTING SYSTEMS, INC. 120V INPUT–24VDC OUTPUT–120W POWER SUPPLY AND 12VDC DIMMING MODULE. "001–1" DENOTES THE OUTLET CONTROLLED. DIMMING MODULE USES 0–10V CONTROL SIGNAL.

TVI — LUTRON "GRX–TVI" 0–10 VOLT INTERFACE

Q — LUTRON "Q96" SHADE CONTROL INTERFACE

SVQ 1 — LUTRON "SVQ–10–PNL" SHADE CONTROL TRANSFORMER PANEL #1

DISCONNECT SWITCH, NON–FUSED. (REFER TO GENERAL NOTE 15).

F — DISCONNECT SWITCH, FUSED. (REFER TO GENERAL NOTE 15).

3 — MAGNETIC MOTOR STARTER. NUMBER "3" INDICATES SIZE

5 — CONNECT TO 5HP MOTOR

G — CONDUIT RUN 1/2"C.–2#12 THHN/THWN, AND 1#12 ISOLATED GREEN GROUND WIRE

CONDUIT RUN 1/2"C.–2#12 THHN/THWN

CONDUIT RUN 1/2"C.–3#12 THHN/THWN

CONDUIT RUN 1/2"C.–4#12 THHN/THWN

CONDUIT RUN 1/2"C.–5#12 THHN/THWN

#10 — CONDUIT RUN 1/2"C.–2#10 THHN/THWN

#10 — CONDUIT RUN 1/2"C.–3#10 THHN/THWN

#10 — CONDUIT RUN 3/4"C.–4#10 THHN/THWN

#10 — CONDUIT RUN 3/4"C.–5#10 THHN/THWN

A–1,3 — HOME RUN TO PANEL "A", CIRCUITS 1 & 3. 1/2"C.–3#12 THHN/THWN

CONDUIT RUN CONCEALED IN FLOOR OR SLAB

C — CONTROL CONDUIT RUN. 1/2" CONDUIT WITH CONTROL CONDUCTOR AS REQUIRED

LV2 — 1 PAIR #18–22 AWG TWISTED/SHIELDED CLASS 2 WIRE. NO CONDUIT NECESSARY.

LV3 — (3) THREE #18–22 CLASS 2 WIRES. NO CONDUIT NECESSARY.

LV4 — 2 PAIR (ONE PAIR #18 AWG, ONE PAIR #18–22 AWG TWISTED/SHIELDED" CLASS 2 WIRE. "LUTRON" WIRE #GRX–CBL–346S–500 MAY BE USED. NO CONDUIT NECESSARY.

LV7 — 7 CONDUCTOR COMMUNICATION/POWER CABLE–CLASS 2 WIRE. LUTRON WIRE "SVQ–CBL–250" MAY BE USED. NO CONDUIT NECESSARY

LA–M1–A1 — HOME RUN TO LUTRON "HOMEWORKS" REMOTE POWER PANEL LA–REMOTE POWER MODULE #1–ADDRESS #1

CIRCUIT BREAKER PANELBOARD, RECESSED IN WALL

CIRCUIT BREAKER PANELBOARD, SURFACE MOUNTED

DISTRIBUTION BOARD OR POWER PANEL

CLASS 2 TERMINAL BACKBOARD, 3/4" PLYWOOD

LUTRON "HOMEWORKS" REMOTE POWER PANEL RECESSED IN WALL

LUTRON "HOMEWORKS" REMOTE POWER PANEL SURFACE MOUNTED ON WALL

AFF	ABOVE FINISH FLOOR
CO	CONDUIT ONLY. WITH NYLON PULL CORD OF 250 LB. MINIMUM STRENGTH
DP	DEEP
FLA	FULL LOAD AMPERES
GFCI	GROUND FAULT CIRCUIT INTERRUPTER
NTS	NOT TO SCALE
UG	UNDERGROUND
UL	UNDERWRITERS LABORATORIES, INC
VL	VERIFY LOCATION
WP	WEATHER–PROTECTED

SHEET INDEX

E–1.00	SYMBOLS AND GENERAL NOTES	E–3.01	SINGLE LINE DIAGRAM & CALCULATIONS
E–1.01	ELECTRICAL SITE PLAN	E–4.01	PANEL SCHEDULES
E–2.01	FIRST FLOOR LIGHTING PLAN	E–4.02	LUTRON PANEL SCHEDULES
E–2.02	SECOND FLOOR LIGHTING PLAN	E–6.01	FIRST FLOOR CLASS 2 PLAN
E–2.03	FIRST FLOOR POWER PLAN	E–6.02	SECOND FLOOR CLASS 2 PLAN
E–2.04	SECOND FLOOR POWER PLAN		
E–2.05	ROOF POWER PLAN		

GENERAL NOTES

1. COORDINATE NEW ELECTRICAL SERVICE INSTALLATION WITH THE LOS ANGELES DEPARTMENT OF WATER AND POWER (LADWP). COMPLY WITH ALL LADWP REQUIREMENTS FOR NEW SEVICE INSTALLATION.

2. THE ELECTRICAL CONTRACTOR SHALL FURNISH AND INSTALL ALL EQUIPMENT DEVICES, WIRING, MATERIALS, PERMITS, ALL CABLE CHARGES AND ALL AUXILIARIES NECESSARY, OR REQUIRED TO COMPLETE THE ENTIRE ELECTRICAL INSTALLATION FOR SATISFACTORY FUNCTION AND OPERATION WHETHER OR NOT SHOWN ON PLANS, AND SHALL INCLUDE ALL COSTS OF THE JOB IN THE BID.

3. EXAMINE, COORDINATE AND SPECIFICALLY BE RESPONSIBLE FOR ALL INFORMATION RELATIVE TO THE ELECTRICAL INSTALLATION CONTAINED ON THE ARCHITECTURAL AND MECHANICAL PLANS AND SPECIFICATIONS.

4. ALL CONDUIT RUNS ARE SHOWN DIAGRAMMATICALLY ONLY AND SHALL BE RUN TO SUIT EXISTING CONDITIONS IN THE FIELD IN A WORKMANLIKE MANNER. PROVIDE ALL PULL BOXES REQUIRED TO RUN CIRCUITING IN A SATISFACTORY MANNER.

5. MAINTAIN GROUNDING CONTINUITY SYSTEM IN AN APPROVED MANNER AND AS REQUIRED BY CODE. PROVIDE GROUNDING AS SHOWN ON PLANS AND FURTHER AS REQUIRED BY CODE. INSTALL A #12 AWG MINIMUM GREEN GROUND WIRE IN ALL FLEXIBLE CONDUIT. PROVIDE BONDING JUMPERS ON ALL RECEPTACLES AS REQUIRED.

6. THE CONTRACTOR SHALL VERIFY THE LOCATIONS OF ALL OUTLETS WITH THE OWNER PRIOR TO ROUGH–IN INSTALLATION.

7. ALL LIGHTING FIXTURES SHALL BE LISTED BY UNDERWRITERS LABORATORIES.

8. ALL WIRING IN CONTINUOUS ROWS OF FLUORESCENT FIXTURES SHALL HAVE THHN OR RHH TYPE INSULATION.

9. RECESSED INCANDESCENT LIGHT FIXTURES IN INSULATED CEILINGS SHALL BE U.L. LISTED FOR ZERO CLEARANCE, "I.C." RATED.

10. LIGHT FIXTURES IN CLOTHES CLOSETS SHALL COMPLY WITH NEC ARTICLE 410–8.

11. ALL OUTDOOR RECEPTACLES SHALL BE WEATHER PROTECTED (WP) AND COMPLY WITH SECTION 406.8(B)(1), 2007 CEC.

12. PROVIDE GROUND FAULT PROTECTION ON RECEPTACLES LOCATED IN BATHROOMS, OUTDOORS, KITCHEN COUNTERS (AS REQUIRED), GARAGE, PER NEC ARTICLE 210–8.

13. ALL SMOKE DETECTORS SHALL BE STATE FIRE MARSHALL LISTED AND BE SUPPLIED WITH 120V AND BATTERY BACKUP. ALL SMOKE DETECTORS SHALL BE INTERCONNECTED (TO GO INTO ALARM) TOGETHER.

14. EQUIPMENT SHALL BE LISTED BY A CITY of LOS ANGELES RECOGNIZED TESTING LABORATORY OR APPROVED BY THE DEPARTMENT of BUILDING and SAFETY.

15. MOTORS SHALL BE PROVIDED WITH OVERLOAD PROTECTION PER NEC 430–32. MOTORS SHALL HAVE A THERMAL PROTECTOR INTEGRAL WITH THE MOTOR, APPROVED FOR USE WITH THE MOTOR THAT IT PROTECTS ON THE BASIS THAT IT WILL PREVENT DANGEROUS OVER–HEATING OF THE MOTOR DUE TO OVERLOAD OR FAILURE TO START.

16. ALL WIRING METHODS AND MATERIALS USED ON THIS PROJECT SHALL CONFORM TO THE REQUIREMENTS OF THE 2007 CEC. (2005 NEC)

17. ALL TRANSFORMERS TO BE GROUNDED IN ACCORDANCE WITH MANUFACTURERS RECOMMENDATIONS. PROVIDE OVERCURRENT PROTECTION FOR THE TRANSFORMER PRIMARY AS PER NEC ARTICLE 450.3. PROVIDE OVERCURRENT PROTECTION FOR THE TRANSFORMER SECONDARY CONDUCTORS AS PER NEC ARTICLE 240.21.

18. LIGHTING CONTROL SYSTEM SHALL BE LUTRON ELECTRONICS CO., INC. "HOMEWORKS INTERACTIVE" 8 SERIES WITH P5 PROCESSORS. ALL KEYPADS SPECIFIED FOR THIS PACKAGE HAVE BEEN BASED ON THE "seeTouch" STYLE 5 BUTTON KEYPAD (WITH RAISE/ LOWER) FOR BIDDING PURPOSES. (LUTRON "STWD–5BRL"). THE ELECTRICAL CONTRACTOR SHALL, ALONG WITH THE CLIENT, DETERMINE THE EXACT KEYPAD STYLE AND BUTTON DESIGNATION AT A LATER DATE. KEYPADS LOCATED AT BOTTOM OR TOP OF STAIRWAYS SHALL BE USED PRIMARILY FOR LIGHTING CONTROL IN THE CORRESPONDING STAIR(S). LIKEWISE, KEYPADS LOCATED IN HALLWAYS, BEDROOMS, KITCHEN, ETC SHALL BE USED PRIMARILY FOR LIGHTING CONTROL IN THE CORRESPONDING ROOM OR AREA, TYPICAL.

19. THIS IS A SINGLE FAMILY RESIDENCE AND CLASSIFIED AS ONE BUILDING BY THE DEPARTMENT OF DEPARTMENT OF BUILDING AND SAFETY.

20. ALL BRANCH CIRCUIT BREAKERS PROTECTING 120V CIRCUITS FOR BEDROOM RECEPTACLES, LIGHTING FIXTURES, ETC SHALL BE PROTECTED BY ARC–FAULT CIRCUIT INTERRUPTERS IN ACCORDANCE WITH NEC ARTICLE 210.12.

21. DEDICATED ELECTRICAL EQUIPMENT SPACE AND WORKING SPACE IN THE DIRECTION OF ACCESS TO LIVE PARTS SHALL COMPLY WITH NEC ARTICLE 110–26 FOR ALL INDOOR/ OUTDOOR ELECTRICAL EQUIPMENT INSTALLATIONS. NO PIPING, DUCTS OR EQUIPMENT FOREIGN TO ELECTRICAL EQUIPMENT SHALL BE PERMITTED TO BE LOCATED WITHIN THE DEDICATED SPACE ABOVE THE ELECTRICAL EQUIPMENT. ARTICLE 110–26(F)(1)(a).

22. THIS ELECTRICAL INSTALLATION SHALL COMPLY WITH THE REVISED 2005 CALIFORNIA ENERGY COMMISSION TITLE 24 GUIDELINES AS IT PERTAINS TO RESIDENTIAL CONSTRUCTION.

    CALIFORNIA TITLE 24 2005 RESIDENTIAL BUILDING ENERGY EFFICIENCY SUMMARY:

    A. FOLLOWING ARE REQUIREMENTS THAT APPLY TO ALL PERMANENTLY INSTALLED LIGHTING FIXTURES:
       1. ALL BALLASTS FOR LAMPS RATED 13 WATTS OR GREATER MUST BE ELECTRONIC BALLASTS.
       2. LIGHTING FIXTURES THAT ARE RECESSED INTO INSULATED CEILINGS ARE REQUIRED TO BE RATED FOR INSULATION CONTACT (IC RATED SO THAT INSULATION CAN BE PLACED OVER THEM. THE HOUSING OF THE FIXTURE MUST ALSO BE CERTIFIED AIRTIGHT TO PREVENT CONDITIONED AIR ESCAPING INTO THE CEILING CAVITY OR ATTIC, OR UNCONDITIONED AIR FILTRATING FROM THE CEILING OR ATTIC INTO THE CONDITIONED SPACE, AND THEY MUST HAVE A SEALED GASKET OR CAULKING BETWEEN THE HOUSING AND CEILING.
       3. ALL HIGH EFFICACY LIGHTING MUST BE SWITCHED SEPARATELY FROM NON–HIGH EFFICACY LIGHTING.

    B. THERE ARE THREE CLASSIFICATIONS OF INTERIOR RESIDENTIAL ROOMS, AND EACH RESPECITVE CLASSIFICATIONS HAS DIFFERENT COMPLIANCE OPTIONS. ALL RESIDENTIAL INTERIOR ROOMS WILL FIT INTO THESE THREE CLASSIFICATIONS. CLOSETS LESS THAN 70 SQUARE FEET ARE EXEMPT FROM THESE STANDARDS:
       1. KITCHEN
          AT LEAST 50 PERCENT OF THE INSTALLED WATTAGE MUST BE FROM HIGH EFFICANCY LIGHTING FIXTURES. FOR EXAMPLE, IF ONE INCANDESCENT FIXTURE RATED AT 100 WATTS IS INSTALLED, THEN ONE OPTION WOULD BE TO INSTALL FOUR 25 WATT COMPACT FLUORESCENT FIXTURES. IF MULTIPLE LAYERS OF LIGHTING SYSTEMS ARE INSTALLED. LIKE COVE LIGHTING, PLUS UNDER CABINET LIGHTING, PLUS RECESSED CEILING LIGHTS, SIMPLY ADD UP THE TOTAL WATTAGE OF ALL SYSTEMS TO VERIFY THAT AT LEAST 50 PERCENT OF THE WATTAGE COMES FROM HIGH EFFICANCY LIGHTING FIXTURES. CURRENT STANDARDS REQUIRE THE "GENERAL" LIGHTING TO BE HIGH EFFICANCY, AND OTHER LIGHTING CAN BE NON–HIGH EFFICANCY IF ITS IS ON A SEPARATE SWITCH.
       2. BATHROOM, GARAGE, LAUNDRY ROOM, UTILITY ROOMS
          THERE ARE TWO OPTIONS:
          a. ALL PERMANENTLY INSTALLED LIGHTING FIXTURES MUST BE HIGH EFFICACY, OR
          b. CONTROLLED BY A MANUAL–ON / AUTOMATIC OFF OCCUPANY SENSOR. MANUAL–ON / AUTOMATIC– OFF OCCUPANT SENSOR AUTOMATICALLY TURN LIGHTS OFF IF AN OCCUPANT FORGETS TO TURN THEM OFF WHEN A ROOM IS UNOCCUPIED. THERE IS AN ALTERNATE OPTION TO ALLOW ALL NON–HIGH EFFICACY LIGHTING IN ONE BATHROOM IN EXHANGE FOR HIGH EFFICACY LIGHTING OUTDOORS, PLUS HIGH EFFICACY UTILITY ROOM, LAUNDRY ROOM, OR GARAGE LIGHTING.
       3. ALL OTHER ROOMS (OTHER THAN KITCHEN, BATHROOM, GARAGE, LAUNDRY ROOM, UTILITY ROOM) THIS INCLUDES BEDROOM, DINING ROOM, HALLWAY, STAIRWELL, ETC.
          THERE ARE THREE OPTIONS:
          a. ALL PERMANENTLY INSTALLED LIGHTING FIXTURES MUST BE HIGH EFFICACY, OR
          b. CONTROLLED BY A MANUAL–ON / AUTOMATIC–OFF OCCUPANY SENSOR, OR
          c. CONTROLLED BY A DIMMER

    C. OTHER 2005 RESIDENTIAL LIGHTING REQUIREMENTS
       1. OUTDOOR LIGHTING ATTACHED TO BUILDINGS. (DOES NOT INCLUDED OUTDOOR LIGHTING THAT IS NOT ATTACHED TO BUILDINGS LIKE LANDSCAPE LIGHTING MOUNTED ON TOP OF A POST)
          THERE ARE TWO OPTIONS:
          a. ALL PERMANENTLY INSTALLED LIGHTING FIXTURES MUST BE HIGH EFFICACY, OR
          b. CONTROLLED BY BOTH A PHOTO CONTROL AND MOTION SENSOR.

23. LABEL ALL EQUIPMENT AS INDICATED ON PLANS, OR AS DIRECTED. DESIGNATIONS SHALL BE IN THE FORM OF NAMEPLATES (MOUNTED WITH SCREWS) OF ENGRAVED LAMINATED PLASTIC, OR MICARTA TYPE, WITH WHITE LETTERS ENGRAVED THROUGH A BLACK BACKGROUND. COMPLY WITH NEC ARTICLE 408.4, 2007 CEC, REGARDING CIRCUIT DIRECTORY.

24. LIGHT FIXTURES AND ELECTRICAL PANELS SHALL NOT BE RECESSED INTO FIRE RATED ASSEMBLIES UNLESS BOXED WITH EQUIVALENT CONSTRUCTION.

25. PROVIDE CONDUCTORS OF STANDARD ANNEALED COPPER WIRE. USE SINGLE CONDUCTOR WIRE WITH 600–VOLT INSULATION FOR GENERAL WIRING IN CONDUIT. PROVIDE SOLID TYPE CONDUCTORS FOR NO. 8 AWG AND SMALLER WITH COLOR–CODED TYPE THHN/THWN INSULATION. PROVIDE STRANDED CONDUCTORS NO. 6 AND LARGER WITH THHN, XHHW, THW OR RHW IN–SULATION. PROVIDE NO. 12 AWG MINIMUM SIZE CONDUCTOR FOR USE IN LIGHTING AND POWER BRANCH CIRCUITS. CONFORM TO THE 2005 NATIONAL ELECTRICAL CODE FOR MARKING AND COLOR CODING OF CONDUCTORS.

26. PROVIDE PROTECTION FROM PHYSICAL DAMAGE FOR SWITCHBOARDS, PANELBOARDS AND OTHER ELECTRICAL EQUIPMENT PER NEC ARTICLE 110.27(B).

27. PROVIDE EQUIPMENT GROUNDING CONDUCTORS FOR ALL POOL RELATED EQUIPMENT AND BOND TOGETHER PER NEC ARTICLE 680.26.

28. UNDERGROUND INSTALLATIONS SHALL COMPLY WITH THE PROVISIONS OF NEC ARTICLE 300.5 AND 300.7 WHERE APPLICABLE.

29. FUSES SHALL BE PROVIDED WITH REJECTION TYPE FUSE HOLDERS PER NEC ARTICLE 240.60(B)

30. ALL UNDERGROUND RACEWAYS SHALL BE PVC RIGID NONMETTALLIC CONDUIT. USE SCHEDULE 40 FOR UNDERGROUND RUNS AND SCHEDULE 80 WHEN ENTERING BUILDINGS OR WHERE EXPOSED TO PHYSICAL DAMAGE. INSTALLATION SHALL COMPLY WITH NEC ARTICLE 352. INTERIOR RACEWAYS THAT ARE EXPOSED IN EQUIPMENT ROOMS SHALL BE EMT CONDUIT. INSTALLATION SHALL COMPLY WITH NEC ARTICLE 358. RACEWAYS CONCEALED IN WALLS, ATTICS AND CRAWL SPACES SHALL BE RIGID MET–TALLIC FLEXIBLE CONDUIT (GALVANIZED STEEL OR ALUMINUM).

STEVEN EHRLICH Architects

10865 WASHINGTON BLVD.
CULVER CITY, 90232.3600
TEL 310.838.9700
FAX 310.838.9737
WWW.S-EHRLICH.COM

PROJECT

Hoffman Castleman Residence

1445 El Bosque Street, Pacific Palisades, CA

CONSULTANTS

VRG, INC.
CONSULTING ELECTRICAL ENGINEERS
1018 SUPERBA AVE
VENICE, CA 90291
TEL 310.399.7031
FAX 310.581.3814

NO.	DATE	REVISION

THIS DRAWING AND THE DESIGNS, ARRANGEMENTS, DEPICTIONS, IDEAS AND OTHER INFORMATION CONTAINED HEREIN CONSTITUTE UNPUBLISHED WORK OF STEVEN EHRLICH ARCHITECTS AND SHALL REMAIN PROPERTY OF STEVEN EHRLICH ARCHITECTS IN PERPETUITY. NO PART THEREOF SHALL BE REPRODUCED, COPIED, DISCLOSED, DISTRIBUTED, SOLD, PUBLISHED OR OTHERWISE USED IN ANYWAY WITHOUT THE ADVANCED EXPRESS WRITTEN CONSENT OF STEVEN EHRLICH ARCHITECTS. VISUAL CONTACT WITH THE ABOVE DRAWINGS, OR ANY PART THEREOF, SHALL CONSTITUE CONCLUSIVE EVIDENCE OF ACCEPTANCE OF THESE RESTRICTIONS.

SHEET TITLE

Symbols & General Notes

DRAWN: E.C.

SCALE: N.T.S.

STATUS:

DATE: 04-09-2009

FILE:

JOB:

SHEET NUMBER:

E1.00

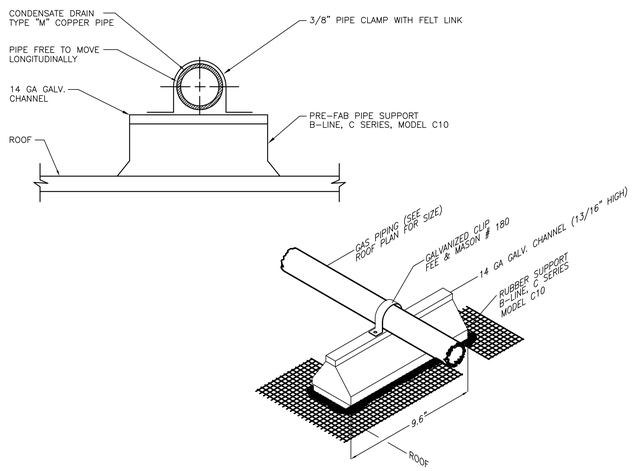

GAS/COND. DRAIN PIPE SUPPORT DETAIL — SCALE: NONE — 7

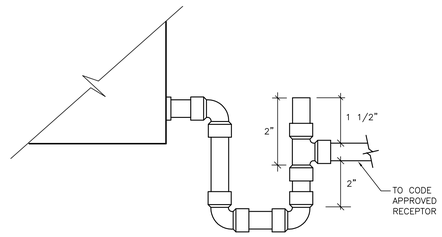

CONDENSATE TRAP DETAIL — SCALE: NONE — 4

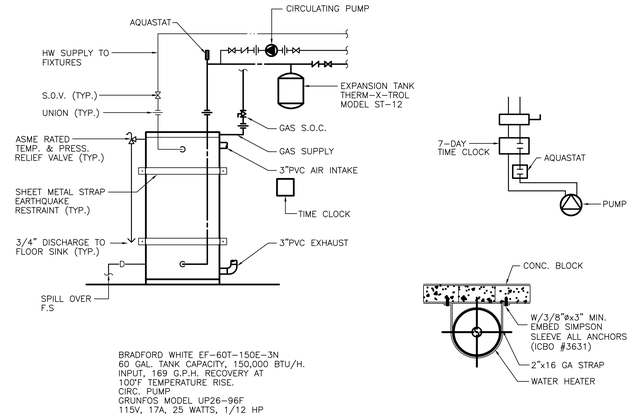

WATER HEATER DETAIL — SCALE: NONE — 1

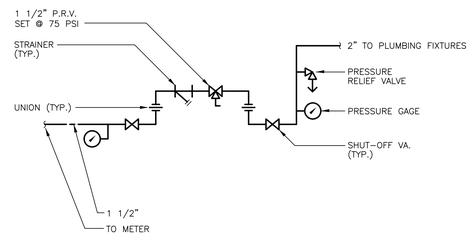

PRESSURE REDUCING VALVES TO BE WILKINS SERIES 500 YSBR

WATER PRESSURE REGULATOR DETAIL — SCALE: NONE — 8

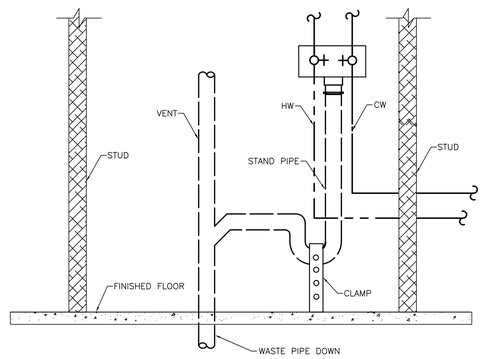

CLOTHES WASHER WASTE/SUPPLY BOX DETAIL — SCALE: NONE — 5

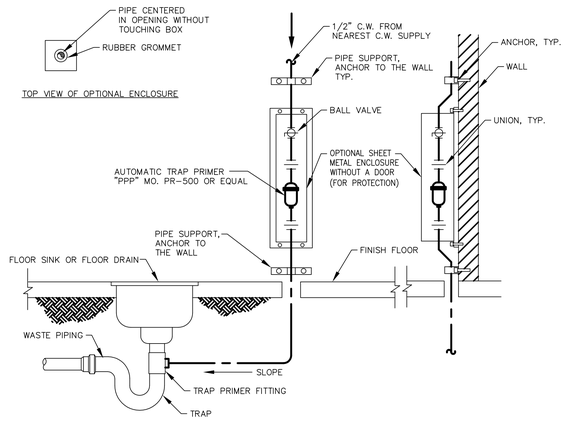

TRAP PRIMER DETAIL — SCALE: NONE — 2

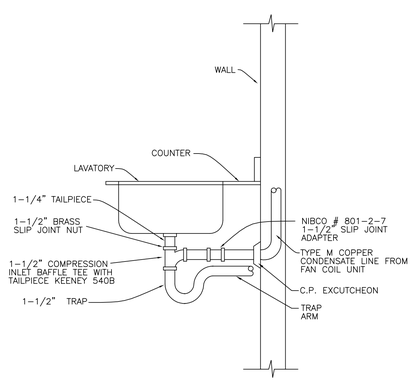

LAVATORY TAILPIECE CONNECTION DETAIL — SCALE: NONE — 9

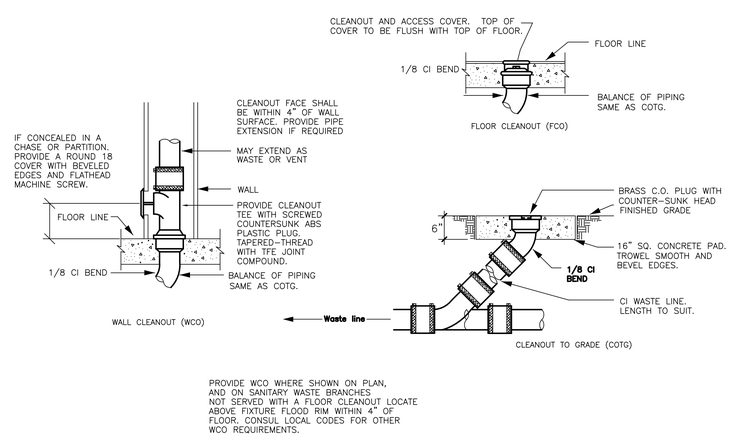

PROVIDE WCO WHERE SHOWN ON PLAN, AND ON SANITARY WASTE BRANCHES NOT SERVED WITH A FLOOR CLEANOUT LOCATE ABOVE FIXTURE FLOOD RIM WITHIN 4" OF FLOOR. CONSUL LOCAL CODES FOR OTHER WCO REQUIREMENTS.

CLEANOUTS DETAILS — SCALE: NONE — 6

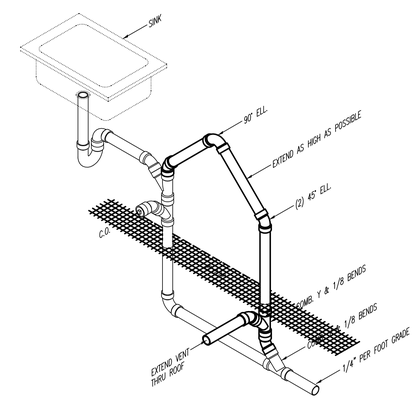

ISLAND VENT DETAIL — SCALE: NONE — 3

STEVEN EHRLICH Architects

10865 WASHINGTON BLVD
CULVER CITY, 90232.3600
TEL 310.838.9700
FAX 310.838.9737
EMAIL: INFO@S-EHRLICH.COM

HOFFMAN-CASTLEMAN RESIDENCE
1445 EL BOSQUE CT.
PACIFIC PALISADES, CALIFORNIA 90272

CONSULTANTS •

M.B.& A.
115 SO. LAMER ST.
BURBANK, CA. 91506
818 845-1585 PH
818 845-6433 FAX

NO.	DATE	REVISION

PROGRESS PRINT
NOT TO BE USED FOR CONSTRUCTION
DATE 03.11.09

THIS DRAWING AND THE DESIGNS, ARRANGEMENTS, DEPICTIONS, IDEAS AND OTHER INFORMATION CONTAINED HEREIN CONSTITUTE UNPUBLISHED WORK OF STEVEN EHRLICH ARCHITECTS AND SHALL REMAIN PROPERTY OF STEVEN EHRLICH ARCHITECTS IN PERPETUITY. NO PART THEREOF SHALL BE REPRODUCED, COPIED, DISCLOSED, DISTRIBUTED,SOLD, PUBLISHED OR OTHERWISE USED IN ANYWAY WITHOUT THE ADVANCED EXPRESS WRITTEN CONSENT OF STEVEN EHRLICH ARCHITECTS. VISUAL CONTACT WITH THE ABOVE DRAWINGS, OR ANY PART THEREOF, SHALL CONSTITUTE CONCLUSIVE EVIDENCE OF ACCEPTANCE OF THESE RESTRICTIONS.

SHEET TITLE

PLUMBING LEGEND, GENERAL NOTES & SCHEDULES ROOF PLAN

DRAWN	JE
CHECKED	—
SCALE	1/4" = 1'-0"
DATE	
FILE	-
JOB	491 - HOFFMAN CASTLEMAN
SHEET	

P3.0

© MB&A CONSULTING ENGINEERS, MARCH 2009

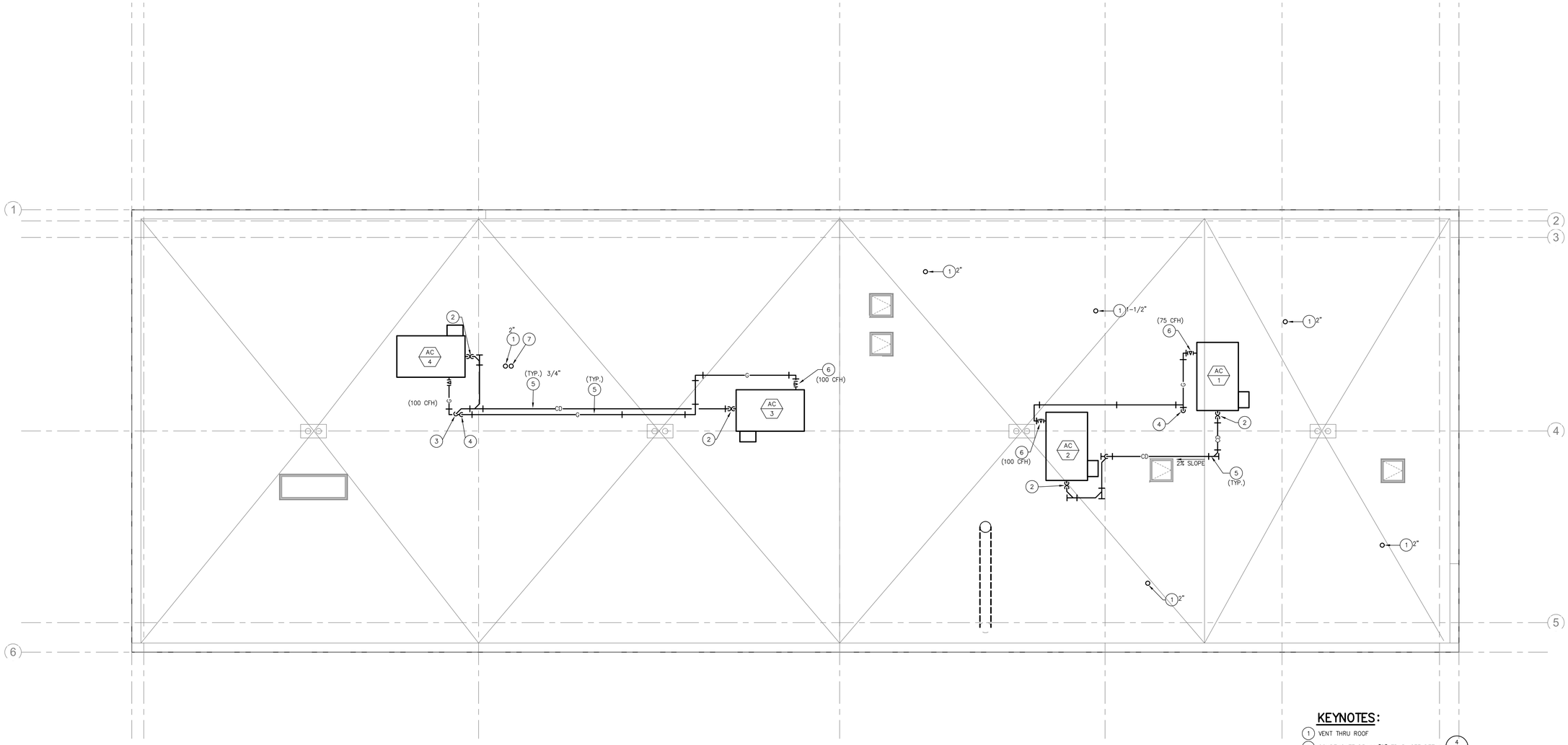

KEYNOTES:

1. VENT THRU ROOF
2. CONDENSATE DRAIN "P" TRAP. SEE DETAIL 4/P3.0
3. CONDENSATE DRAIN LINE DN. TO 2ND FLOOR
4. GAS LINE UP FROM 2ND FLOOR
5. GAS/CONDENSATE DRAIN LINE SUPPORT. SEE DETAIL 7/P3.0
6. CONNECT GAS LINE W/S.O.C. TO AC UNIT
7. WATE HEATER VENT/INTAKE WITH CONCENTRIC VEN KIT

PLUMBING ROOF PLAN

SCALE: 1/4=T-0"

N W E S

STEVEN EHRLICH Architects

10865 WASHINGTON BLVD

CULVER CITY, 90232.3600

TEL 310.838.9700

FAX 310.838.9737

EMAIL: INFO@S-EHRLICH.COM

HOFFMAN-CASTLEMAN RESIDENCE

1445 EL BOSQUE CT.

PACIFIC PALISADES, CALIFORNIA 90272

CONSULTANTS •

M.B.& A.

115 SO. LAMER ST.

BURBANK, CA. 91506

818 845-1585 PH

818 845-6433 FAX

NO.	DATE	REVISION

PROGRESS PRINT

NOT TO BE USED FOR CONSTRUCTION

DATE 03.11.09

THIS DRAWING AND THE DESIGNS, ARRANGEMENTS, DEPICTIONS, IDEAS AND OTHER INFORMATION CONTAINED HEREIN CONSTITUTE UNPUBLISHED WORK OF STEVEN EHRLICH ARCHITECTS AND SHALL REMAIN PROPERTY OF STEVEN EHRLICH ARCHITECTS IN PERPETUITY. NO PART THEREOF SHALL BE REPRODUCED, COPIED, DISCLOSED, DISTRIBUTED,SOLD, PUBLISHED OR OTHERWISE USED IN ANYWAY WITHOUT THE ADVANCED EXPRESS WRITTEN CONSENT OF STEVEN EHRLICH ARCHITECTS. VISUAL CONTACT WITH THE ABOVE DRAWINGS, OR ANY PART THEREOF, SHALL CONSTITUTE CONCLUSIVE EVIDENCE OF ACCEPTANCE OF THESE RESTRICTIONS.

SHEET TITLE

PLUMBING ROOF PLAN

DRAWN	JE/RM
CHECKED	LD
SCALE	1/4" = 1'-0"
DATE	•
FILE	-
JOB	491 - HOFFMAN CASTLEMAN
SHEET	•

P2.3

©MB&A CONSULTING ENGINEERS, MARCH 2009

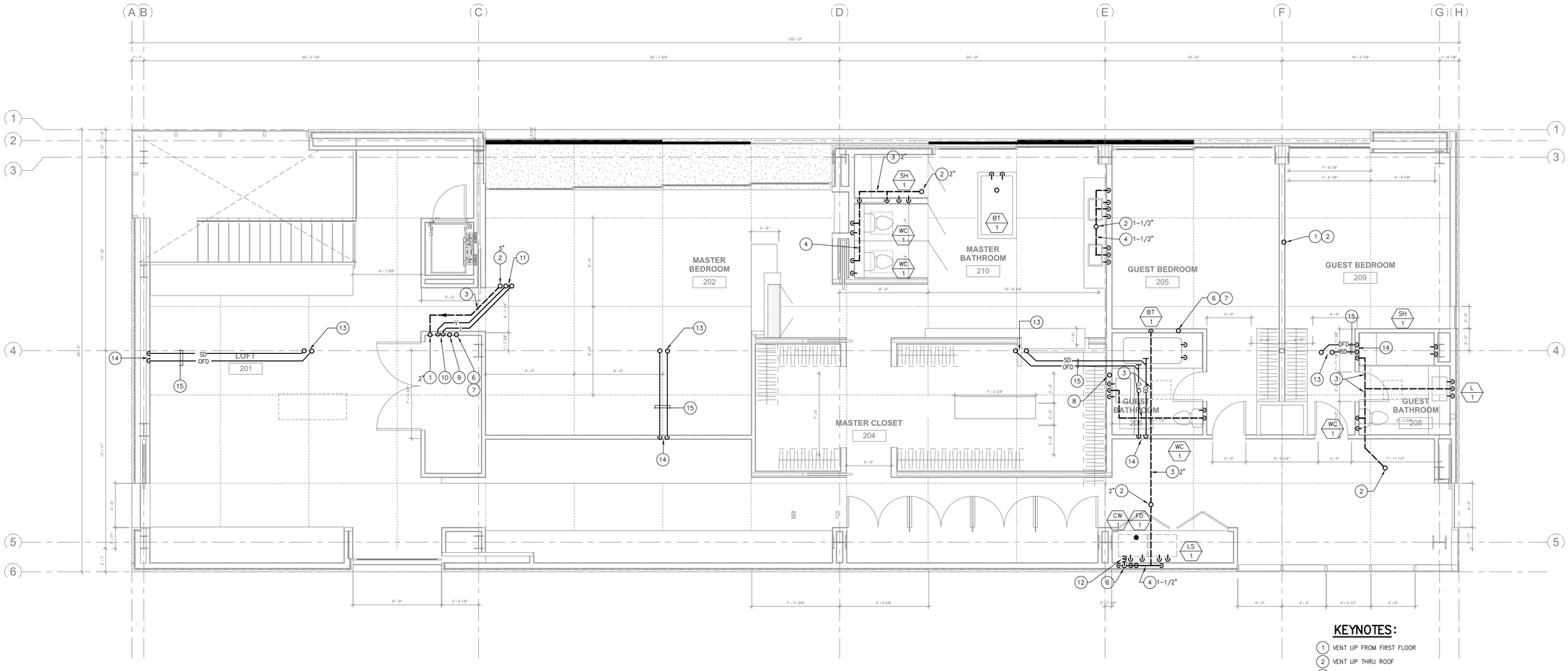

KEYNOTES:

1. VENT UP FROM FIRST FLOOR
2. VENT UP THRU ROOF
3. VENT LINE RUN ABOVE CEILING
4. VENT LINE RUN IN WALL
5. CW LINE UP THRU ROOF
6. GAS LINE UP FROM FIRST FLOOR
7. GAS LINE UP THRU ROOF
8. 1" CONDENSATE DRAIN LINE DN. IN WALL FROM ROOF. CONNECT TO LAV. TAILPIECE SEE DETAIL 9/P3.0
9. 3/4" CONDENSATE DRAIN RISER
10. 4" WATER HEATER VENT/INTAKE PIPING UP FROM SECOND FLOOR
11. 4" WATER HEATER VENT/INTAKE PIPING TO CONCENTRIC TERMINATION AT ROOF
12. CONNECT GAS LINE WITH S.O.C. TO DRYER (35 CFH)
13. 3"S.D. & 3"OFD LINES DOWN FROM ROOF
14. 3"SD & 3" OFD LINES DOWN TO FIRST FLOOR.
15. 3"SD & 3"OFD LINES RUN ABOVE CEILING.

SECOND FLOOR PLUMBING PLAN

SCALE: 1/4=1'-0"

N W E S

STEVEN EHRLICH Architects

10865 WASHINGTON BLVD

CULVER CITY, 90232.3600

TEL 310.838.9700

FAX 310.838.9737

EMAIL: INFO@S-EHRLICH.COM

HOFFMAN-CASTLEMAN RESIDENCE

1445 EL BOSQUE CT.

PACIFIC PALISADES, CALIFORNIA 90272

CONSULTANTS •

M.B.& A.

115 SO. LAMER ST.

BURBANK, CA. 91506

818 845-1585 PH

818 845-6433 FAX

NO.	DATE	REVISION

PROGRESS PRINT

NOT TO BE USED FOR CONSTRUCTION

DATE 03.11.09

THIS DRAWING AND THE DESIGNS, ARRANGEMENTS, DEPICTIONS, IDEAS AND OTHER INFORMATION CONTAINED HEREIN CONSTITUTE UNPUBLISHED WORK OF STEVEN EHRLICH ARCHITECTS AND SHALL REMAIN PROPERTY OF STEVEN EHRLICH ARCHITECTS IN PERPETUITY. NO PART THEREOF SHALL BE REPRODUCED, COPIED, DISCLOSED, DISTRIBUTED,SOLD, PUBLISHED OR OTHERWISE USED IN ANYWAY WITHOUT THE ADVANCED EXPRESS WRITTEN CONSENT OF STEVEN EHRLICH ARCHITECTS. VISUAL CONTACT WITH THE ABOVE DRAWINGS, OR ANY PART THEREOF, SHALL CONSTITUTE CONCLUSIVE EVIDENCE OF ACCEPTANCE OF THESE RESTRICTIONS.

SHEET TITLE

SECOND FLOOR PLUMBING PLAN

DRAWN	JE/RM
CHECKED	LD
SCALE	1/4" = 1'-0"
DATE	•
FILE	-
JOB	491 - HOFFMAN CASTLEMAN
SHEET	•

P2.2

©MB&A CONSULTING ENGINEERS, MARCH 2009

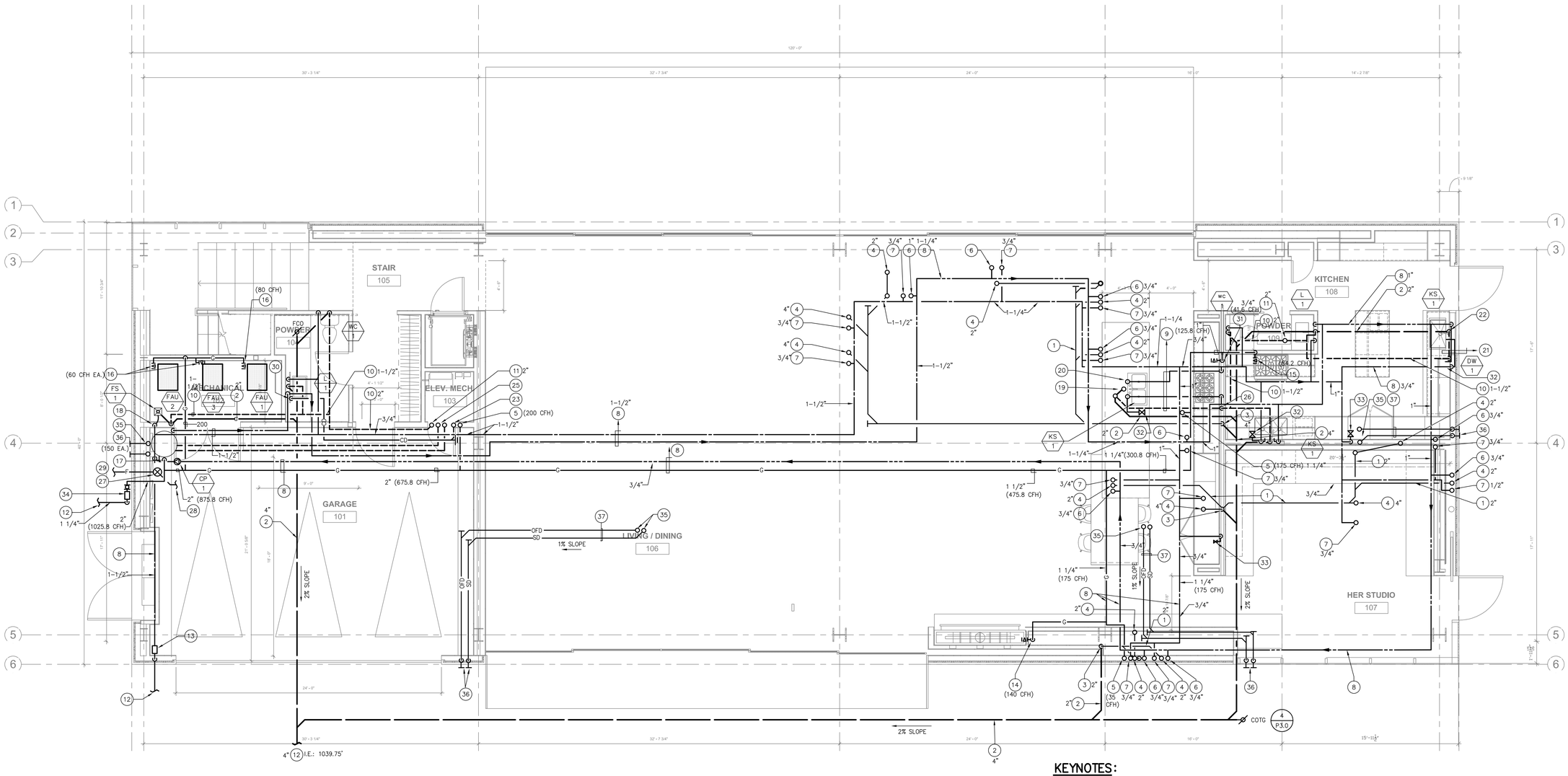

FIRST FLOOR PLUMBING PLAN

SCALE: 1/4=1'-0"

N W E S

KEYNOTES:

1. WASTE LINE RUN ABOVE CEILING
2. WASTE LINE RUN BELOW FLOOR
3. WASTE LINE DOWN IN WALL TO BELOW FLOOR
4. WASTE LINE DOWN FROM 2ND FLOOR
5. GAS LINE UP TO 2ND FLOOR
6. HW LINE UP TO 2ND FLOOR
7. CW LINE UP TO 2ND FLOOR
8. WATER/GAS LINES RUN ABOVE CEILING PROVIDE A PVC SLEEVE FOR WATER LINES
9. WATER/VENT LINES RUN BELOW FLOOR PROVIDE A PVC SLEEVE FOR WATER LINES
10. VENT LINES RUN ABOVE CEILING
11. VENT LINES RUN UP TO 2ND FLOOR
12. FOR CONTINUATION OF PLUMBING LINES SEE SITE PLAN
13. WATER PRESSURE REGULATOR. SEE DETAIL 8/P3.0
14. GAS WITH SOC TO FIRE PLACE
15. GAS WITH SOC TO RANGE
16. GAS WITH SOC TO FURNACE
17. GAS WITH SOC TO WATER HEATER. SEE DETAIL 1/P3.0
18. INSTALL A TRAP PRIMER DEVICE. RUN 1/2" CW TO FLOOR SINK CONNECTION. SEE DETAIL 2/P3.0
19. PROVIDE ISLAND VENT. SEE DETAIL 3/P3.0
20. CW & HW LINES UP FROM BELOW FLOOR.
21. WATER AND VENT LINES RUN UNDER WINDOW
22. WALL CLEAN OUT. SEE DETAIL 6/P3.0
23. 3/4" CONDENSATE DRAIN LINE DN. FROM SECOND FLOOR
24. 3/4" CONDENSATE DRAIN LINE IN WAL, SPILL CD LINE @ FLOOR SINK WITH 1" AIR GAP, EXTEND LINE AS NECESSARY
25. 4" WATER HEATER VENT/INTAKE PIPING UP TO SECOND FLOOR
26. VENT LINE UP FROM BELOW FLOOR
27. AUTO SPRINKLER RISER LOCATION
28. FIRE LINE TO SPRINKLER SYSTEM (BY FIRE PROTECTION CONTRACTOR) COORDINATE PIPE ROUTING WITH CITY ENGINEER PRIOR TO ANY CONSTRUCTION
29. FIRE PROTECTION CONTRACTOR SHALL BE RESPONSIBLE TO ALL SCOPE WORK FROM BLDG. INTERIOR UP TO CITY MAIN CONNECTION WITH COORDINATION WITH DWP AND CIVIL DRAWINGS.
30. 3/4" CONDENSATE DRAIN DN. IN WALL, CONNECT TO LAVATORY TAILPIECE SEE DETAIL 9/P3.0
31. GAS WITH SOC TO COOKTOP
32. CONNECT 1/2"HW LINE TO DISHWASHER EXTEND DRAIN WITH AIR GAP FITTING MOUNTED ON COUNTER AND CONNECT TO DISPOSER CONNECTION.
33. CONNECT 1/2"CW LINE WITH SOV TO REFRIGERATOR ICE MAKER
34. PROPOSED GAS METER LOCATION WITH PRESSURE REGULATOR AND 3" EARTHQUAKE VALVE SECURED TO BUILDING.
35. 3"S.D. & 3"OFD LINES DOWN FROM 2ND FLOOR
36. 3"SD & 3" OFD LINES DOWN IN WALL. SPILL AT FLOOR.
37. 3"SD & 3"OFD LINES RUN ABOVE CEILING.

STEVEN EHRLICH Architects

10865 WASHINGTON BLVD

CULVER CITY, 90232.3600

TEL 310.838.9700

FAX 310.838.9737

EMAIL: INFO@S-EHRLICH.COM

HOFFMAN-CASTLEMAN RESIDENCE

1445 EL BOSQUE CT.

PACIFIC PALISADES, CALIFORNIA 90272

CONSULTANTS •

M.B.& A.

115 SO. LAMER ST.

BURBANK, CA. 91506

818 845-1585 PH

818 845-6433 FAX

NO.	DATE	REVISION

PROGRESS PRINT

NOT TO BE USED FOR CONSTRUCTION

DATE 03.11.09

THIS DRAWING AND THE DESIGNS, ARRANGEMENTS, DEPICTIONS, IDEAS AND OTHER INFORMATION CONTAINED HEREIN CONSTITUTE UNPUBLISHED WORK OF STEVEN EHRLICH ARCHITECTS AND SHALL REMAIN PROPERTY OF STEVEN EHRLICH ARCHITECTS IN PERPETUITY. NO PART THEREOF SHALL BE REPRODUCED, COPIED, DISCLOSED, DISTRIBUTED,SOLD, PUBLISHED OR OTHERWISE USED IN ANYWAY WITHOUT THE ADVANCED EXPRESS WRITTEN CONSENT OF STEVEN EHRLICH ARCHITECTS. VISUAL CONTACT WITH THE ABOVE DRAWINGS, OR ANY PART THEREOF, SHALL CONSTITUTE CONCLUSIVE EVIDENCE OF ACCEPTANCE OF THESE RESTRICTIONS.

SHEET TITLE

FIRST FLOOR PLUMBING PLAN

DRAWN	JE/RM
CHECKED	LD
SCALE	1/4" = 1'-0"
DATE	
FILE	-
JOB	491 - HOFFMAN CASTLEMAN
SHEET	

P2.1

© MB&A CONSULTING ENGINEERS, MARCH 2009

FIXTURE CONNECTION SCHEDULE

ITEM	DESCRIPTION	S/W	TRAP	VENT	DFU	BRANCH CW	BRANCH HW	CONN. CW	CONN. HW	REMARKS
WC 1	WATER CLOSET	4"	INT.	2"	4	3/4"	–	1/2"	–	–
L 1	LAVATORY	2"	1 1/4"x 1 1/2"	1 1/2"	1	3/4"	3/4"	1/2"	1/2"	–
KS 1	KITCHEN SINK	2"	1 1/2"	1 1/2"	3	3/4"	3/4"	1/2"	1/2"	–
SH 1	SHOWER	2"	2"	1 1/2"	2	3/4"	3/4"	1/2"	1/2"	–
SH 2	SHOWER	2"	2"	1 1/2"	2	3/4"	3/4"	1/2"	1/2"	–
BT 1	BATH TUB	2"	2"	1 1/2"	2	3/4"	3/4"	1/2"	1/2"	–
LS 1	LAUNDRY SINK	2"	2"	1 1/2"	2	3/4"	3/4"	1/2"	1/2"	–
WM 1	WASHING MACHINE	2"	2"	1 1/2"	3	3/4"	3/4"	3/4"	3/4"	–
WP 1	WHIRLPOOL	2"	2"	1 1/2"	3	1"	1"	3/4"	3/4"	–
S 1	SINK	2"	1 1/2"	1 1/2"	3	3/4"	3/4"	1/2"	1/2"	–
DW 1	DISHWASHER	–	–	–	–	–	–	–	1/2"	PIPE DRAIN TO KITCHEN SINK W/ AIR GAP FITTING
FS 1	FLOOR SINK	2"	2"	1 1/2"	2	–	–	–	–	WITH TRAP PRIMER CONNECTION
FD 1	FLOOR DRAIN	2"	2"	1 1/2"	–	–	–	–	–	WITH TRAP PRIMER CONNECTION
RD 1	ROOF DRAIN	–	–	–	–	–	–	–	–	J.R. SMITH MODEL #1310Y
OD 1	OVERFLOW DRAIN	–	–	–	–	–	–	–	–	J.R. SMITH MODEL #1310-WD
HB 1	HOSE BIBB	–	–	–	–	3/4"	–	3/4"	–	RECESSED MOUNT
HB 1	HOSE BIBB	–	–	–	–	3/4"	–	3/4"	–	WALL MOUNT

WATER CALCULATION

JOB NAME: CASTLEMAN HOFFMAN JOB NO: 08-003 DATE: 9-6-08

WATER PRESSURE: *LOW:* 117 *HIGH:* 147 *ELEVATION:* 1030'

DEVELOPED LENGTH : 130 *FT.* *(FROM METER OR PRV TO MOST REMOTE FIXTURE)*

FITTING LENGTH : 35 *FT.*

TOTAL DEV. LENGTH *(TDL)* : 165 *FT.*

PIPE MATERIAL: *COPPER TYPE L:* X *COPPER TYPE K:* X *OTHER:* _____

PRV INFORMATION: *SIZE* 1 1/2" *MAKE* WILKINS *MODEL* 500YSBR *SETTING* 70 PSI

FIXTURE COUNT

QUANTITY	FIXTURE	UNITS/FIX	TOTAL	H.W.
6	WC	2.5	15	–
6	LAV	1	6	6
1	FILLER	1	1	1
3	K. SINK	1.5	4.5	4.5
1	L. SINK	1.5	1.5	1.5
1	WASHER	4	4	4
1	MASTER SHOWER	8	8	8
1	SHOWER	2	2	2
1	TUB	4	4	4
1	MASTER TUB	6	6	6
3	DISHWASHER	1.5	4.5	4.5
2	ICE MAKER	.5	1	–
4	HOSE BIBB	2.5 / 1	5.5	–
				41.5

PIPE SCHEDULE

SIZE	CW	HW
1/2"	4	3
3/4"	11	8
1"	21	18
1-1/4"	36	28
1-1/2"	58	45
2"	–	–
2-1/2"	–	–

TOTAL: 63..5 FU = 34 GPM

CALCULATIONS:

LOSS THRU METER (1 1/2") : 1.2 *PSI*

LOSS THRU ELEVATION @ SITE : 6.0 *PSI*

LOSS THRU 1 1/2" SITE PIPE 540 FT @ 4.2 PSI : 22.7 *PSI*

AVAILABLE PRESSURE : 87.1 *PSI*

LOSS THRU PRV (1-1/2" SET @ 70) : 6.0 *PSI*

ELEVATION LOSS 20 x0.43 : 8.6 *PSI*

RESIDUAL PRESSURE : 30 *PSI*

OTHER LOSSES : – *PSI*

PRESSURE AVAILABLE FOR LOSS *(P1)* : 28.4 *PSI*

FRICTION LOSS/100 FT= *(P1)* 25.4 / *(TDL)* 165 X 100= 15.4 *PSI/100 FT*

PIPE VELOCITY DESIGNED @ 6 FT/SEC (COLD WATER)

PIPE VELOCITY DESIGNED @ 5 FT/SEC (HOT WATER)

PLUMBING GENERAL NOTES

1. CONTRACTOR SHALL VISIT JOB-SITE AND VERIFY EXISTING CONDITIONS PRIOR TO BID.
2. CONTRACTOR SHALL FIELD VERIFY THE LOCATION OF EXISTING UTILITIES BEFORE STARTING TRENCHING WORK, OR THE INSTALLATION OF ANY PIPING.
3. CONTRACTOR SHALL BE RESPONSIBLE FOR SECURING ALL PERMITS AND PAYING FEES REQUIRED FOR WORK SHOWN ON THESE DRAWINGS. EXCEPT AS INDICATED BELOW.
4. CONTRACTOR SHALL BE RESPONSIBLE FOR CONTACTING GAS COMPANY FOR INSTALLATION OF THE NEW METER AND/OR NEW GAS SERVICE. OWNER SHALL PAY ANY FEES REQUIRED BY GAS CO. FOR INSTALLATION OF SAID METER AND/OR SERVICE.
5. CONTRACTOR SHALL BE RESPONSIBLE FOR CONTACTING THE WATER DEPARTMENT FOR INSTALLATION OF THE NEW DOMESTIC WATER METER, FIRE SERVICE DETECTOR CHECK VALVE AND SERVICE. OWNER SHALL PAY ANY FEES REQUIRED BY WATER COMPANY FOR INSTALLATION OF SAID METER, DETECTOR CHECK AND SERVICE.
6. THE DRAWINGS ARE DIAGRAMATIC. THE LOCATION OF PIPING IS APPROX. COORDINATE THE LOCATION OF PIPING WITH OTHER TRADES. ANY CONFLICTS WITH OTHER TRADES SHALL BE RESOLVED PRIOR TO THE INSTALLATION, OF ANY PIPING.
7. UNDERGROUND PIPING SHALL CLEAR ALL FOOTINGS IN AN APPROVED MANNER. SEE STRUCTURAL DRAWINGS FOR REQUIRED CLEARANCES AND ALLOWABLE FOOTING PENETRATION LOCATIONS.
8. ALL EXCAVATION AND BACKFILL SHALL CONFORM TO THE SPECIFIC SECTION OF THE SPECIFICATIONS FOR EXCAVATION AND BACKFILL.
9. ALL WORK SHALL BE DONE IN COMPLIANCE WITH 2007 EDITION OF THE CALIFORNIA PLUMBING CODE.
10. CONCEAL ALL PIPING IN FINISHED PORTIONS OF THE BUILDING UNLESS NOTED OTHERWISE.
11. CONSULT ARCHITECTURAL DRAWINGS FOR BUILDING DIMENSIONS AND LOCATION AND ELEVATION OF FIXTURES. (SEE ACCESSIBILITY NOTES FOR SPECIAL CONDITIONS.)
12. SANITARY VENTS THRU ROOFS SHALL TERMINATE AT LEAST 10' AWAY OR 3' ABOVE ANY OPERABLE WINDOW OR FRESH AIR INTAKE.
13. PROVIDE SHUT-OFF VALVES AT ALL GAS FIRED EQUIPMENT. PROVIDE SOLID CONNECTION TO GAS FIRED EQUIPMENT, EXCEPT FLEX SHALL BE USED IF EQUIPMENT CONNECTION SIZE IS 3/4" OR 1/2"
14. PROVIDE MAIN GAS SHUT - OFF VALVE ON HOUSE SIDE OF METER, POST SIGN AT MAIN SHUT-OFF VALVE READING "MAIN GAS SHUT - OFF".
15. CLEANOUTS SHALL BE INSTALLED AS PER CODE SECTION 707 & 719
16. WATER CLOSETS SHALL USE 1.6 GALLONS PER FLUSH MAXIMUM.
17. SINKS SHALL USE 2.5 GALLONS PER MINUTE MAXIMUM.
18. STORM DRAINPIPE SIZING IS BASED ON 2" RAINFALL. USE RECTANGULAR PIPE UNDER SIDEWALKS AND WHERE INDICATED ON DRAWINGS. A PERMIT IS REQUIRED FROM PUBLIC WORKS FOR PUBLIC CURB PENETRATIONS.
19. A PERMIT IS REQUIRED FROM PUBLIC WORKS TO MAKE A BUILDING DRAIN CONNECTION TO A PUBLIC SEWER MAIN.
20. WATER HEATERS ANCHORED OR STRAPPED TO RESIST HORIZONTAL DISPLACEMENT DUE TO EARTHQUAKE MOTION.
21. CONTROL VALVES FOR SHOWER AND TUB SHOWER SHALL HAVE INDIVIDUAL SHOWER CONTROL VALVE BALANCE OF THE THERMOSTATIC MIXING VALVE, SET AT 120°F MAXIMUM.
22. AT THE TIME OF DESIGN, OUR OFFICE HAS VERIFIED THAT ALL PIPING, FIXTURES AND EQUIPMENT THAT REQUIRED CITY OF LOS ANGELES MECHANICAL TEST LABORATORY APPROVAL, HAVE SAME. IT SHALL BE THE CONTRACTOR'S RESPONSIBILITY, BETWEEN THE TIME THE CONTRACT IS SIGNED AND THE TIME FOR SUBMITTALS TO BE SUBMITTED, TO ASCERTAIN IF THE APPROVALS ARE STILL VALID AND IF NOT TO NOTIFY THE ARCHITECT AND ENGINEER IN WRITING PRIOR TO SUBMITTING SUBMITTALS FOR APPROVAL. THE CONTRACTOR SHALL ALSO BE RESPONSIBLE FOR MAKING SURE ANY SUBSTITUTIONS ARE APPROVED.
23. THE EMERGENCY GAS SHUT-OFF VALVE, REQUIRED TO SHUT-DOWN ALL GAS FIRED EQUIPMENT LOCATED UNDER THE EXHAUST HOOD IN CASE OF FIRE, IS SUPPLIED BY OTHERS & INSTALLED BY PLUMBING CONTRACTOR. THIS VALVE SHALL BE INSTALLED IN AN ACCESSABLE LOCATION.
24. THE LOCATIONS OF EXISTING UNDERGROUND UTILITIES ARE SHOWN IN AN APPROXIMATE WAY ONLY AND HAVE NOT BEEN INDEPENDENTLY VERIFIED BY THE OWNER OR HIS REPRESENTATIVE. THE CONTRACTOR SHALL DETERMINE THE EXACT LOCATION OF ALL EXISITNG UTILITIES BEFORE COMMENCING WORK, AND AGREES TO BE FULLY RESPONSIBLE FOR ANY AND ALL DAMAGES WHICH MIGHT BE OCCASIONED BY THE CONTRACTOR'S FAILURE TO EXACTLY LOCATE AND PRESERVE ANY AND ALL UNDERGROUND UTILITIES.
25. SLOPE ALL SOIL & WASTE PIPING AT 1/4" PER FOOT U.N.O.
26. SLOPE ALL STORM DRAINAGE PIPING AT 1/4" U.N.O.
27. SLOPE ALL CONDENSATE DRAINS AT 1/8" PER FOOT MINIMUM.
28. HOT WATER PIPING SHALL BE INSULATED PER SECTION 123 OF 2005 C.E.C. ENERGY EFFICIENCY STANDARDS. SEE TABLE 1-G FOR INSULATION THICKNESS REQUIREMENTS.

GAS LOAD-c.f.h.

(3) AC UNIT	CLOTHES DRYER	RANGE	FIREPLACE	(3) FURNACE	WATER HEATER	COOKTOP	TOTAL
(3) X 100 = 300 (1) X 75= 75	35	84.2	140	(2) X 60 = 120 (1) X 80= 80	150	41.6	1025.8
TOTAL DEVELOPED LENGTH = 150 FT							
LOW PRESSURE							

PLUMBING LEGEND

SYMBOL	ABBREV.	DESCRIPTION
S/W	S OR W	SOIL OR WASTE
	V	SANITARY VENT
	CW	COLD WATER
	HW	HOT WATER
	HWR	HOT WATER RETURN
	HW	HOT WATER HEAT TRACED
ICW	ICW	INDUSTRIAL COLD WATER
G	G	FUEL GAS
CD	CD	CONDENSATE DRAIN
SD	SD	STORM DRAIN
OSD	OSD	OVERFLOW STORM DRAIN
SPD	SPD	SUMP PUMP DISCHARGE
SED	SED	SEWAGE EJECTOR DISCHARGE
F	F	FIRE SPRINKLER
		TYP. BEL. GRD. OR FLR. PIPE DESIGNATION
		PIPE UP OR FROM ABOVE
		PIPE DN. OR FROM BELOW
		PIPE FR. BEL. & UP OR FR. ABV. & DN.
GW	GW	GREASE WASTE
		TRAP INDICATION
	FD/AD	FLOOR OR AREA DRAIN
	FS	FLOOR SINK
	RD	ROOF DRAIN
	ORD	OVERFLOW ROOF DRAIN
	CO	CLEANOUT
	FCO/SCO	FLOOR/SURFACE CLEANOUT
	WCO	WALL CLEANOUT
	HB	HOSE BIBB
	BV	BALL VALVE
	GV	GATE VALVE
	CH V	CHECK VALVE
	GC	GAS COCK
	PRV	PRESSURE REDUCING VALVE
	P&T	PRESSURE & TEMPERATURE RELIEF VALVE
	ATP	AUTOMATIC TRAP PRIMER
	RPBP	REDUCING PRESSURE BACKFLOW PREVENTER
	POC	POINT OF CONNECTION
	POD	POINT OF DISCONNECTION

NOTE: THIS IS A GENERAL LEGEND SOME OF THESE ITEMS SHOWN ABOVE MAY NOT BE USED ON THIS PROJECT.

PLUMBING ABBREVIATIONS

ABBREVIATION	DESCRIPTION	ABBREVIATION	DESCRIPTION
ABV.	ABOVE	HDR.	HEADER
BEL.	BELOW	@	AT
DN.	DOWN	W/	WITH
FR.	FROM	CONN.	CONNECT, CONNECTION
X.	EXISTING	BOP	BOTTOM OF PIPE
FLR.	FLOOR	POC	POINT OF CONNECTION
CLG.	CEILING	FIN.	FINISH
IE/INV. EL.	INVERT ELEVATION	DBL.	DOUBLE
EL./ELEV.	ELEVATION	ASSY.	ASSEMBLY
℄	CENTERLINE	CONT.	CONTINUATION
CONTR.	CONTRACTOR	VTR	VENT THRU ROOF
TYP.	TYPICAL	GRD	GRADE
INT.	INTERGAL	PRESS	PRESSURE
GPM	GALLONS PER MINUTE	MAX./MIN.	MAXIMUM/MINIMUM
AP	ACCESS PANEL	FU	FIXTURE UNIT
CFU	COMBINIED FIXTURE UNIT	DFU	DRAINAGE FIXTURE UNIT
IW	INDIRECT WASTE	ID	INDIRECT DRAIN
U.N.O.	UNLESS NOTED OTHERWISE		

NOTE: THIS IS A PLUMBING ABBREAVIATIONS SOME OF THESE ITEMS SHOWN ABOVE MAY NOT BE USED ON THIS PROJECT.

MINIMUM PIPE INSULATION

FOR TYPE "L" COPPER HOT WATER PIPING 105°F-200°F.

	PIPE DIAMETER (IN INCHES)	INSULATION THICKNESS
1 RUNOUTS	UP 2" INCHES	0.5
2 BRANCHES, MAINS & LOOPS	1" & LESS	1.0
	1.25 TO 2"	1.0
	2.50 TO 4"	1.5

NOTES:

1. "RUNOUTS" ARE PIPING THAT IS 12 FEET LONG OR LESS AND THAT IS CONNECTED TO FIXTURES OR INDIVIDUAL TERMINAL UNITS.
2. "BRANCHES, MAINS & LOOPS" ARE CIRCULATING PIPING AND PIPING THAT IS OVER 12 FEET LONG AND THAT IS CONNECTED TO FIXTURES OR INDIVIDUAL TERMINAL UNITS.

PIPE MATERIAL SCHEDULE

SERVICE	MATERIAL	COPPER TYPE "M"	COPPER TYPE "L"	COPPER TYPE "K"	BLACK STEEL	POLYETHYLENE	CAST IRON SOIL PIPE & FITTINGS	
WATER	ABOVE FLOOR		•					
	BELOW GRADE			•				
SANITARY DRAINAGE	INSIDE						•	
	OUTSIDE						•	
SAN. VENT	INSIDE						•	
GAS	ABOVE FLOOR				•			
	BELOW GRADE					•		
CONDENSATE DRAINAGE	INSIDE	•						
	OUTSIDE	•						
RAIN WATER DRAINAGE	INSIDE						•	
	OUTSIDE						•	

THE 2005 CALIFORNIA ENERGY EFFICIENCY STANDARDS HAVE BEEN REVIEWED AND THE DESIGN COMPLIES WITH THESE STANDARDS.

STEVEN EHRLICH Architects

10865 WASHINGTON BLVD

CULVER CITY, 90232.3600

TEL 310.838.9700

FAX 310.838.9737

EMAIL: INFO@S-EHRLICH.COM

HOFFMAN-CASTLEMAN RESIDENCE

1445 EL BOSQUE CT.

PACIFIC PALISADES, CALIFORNIA 90272

CONSULTANTS •

M.B.& A.

115 SO. LAMER ST.

BURBANK, CA. 91506

818 845-1585 PH

818 845-6433 FAX

NO.	DATE	REVISION

PROGRESS PRINT

NOT TO BE USED FOR CONSTRUCTION

DATE 03.11.09

THIS DRAWING AND THE DESIGNS, ARRANGEMENTS, DEPICTIONS, IDEAS AND OTHER INFORMATION CONTAINED HEREIN CONSTITUTE UNPUBLISHED WORK OF STEVEN EHRLICH ARCHITECTS AND SHALL REMAIN PROPERTY OF STEVEN EHRLICH ARCHITECTS IN PERPETUITY. NO PART THEREOF SHALL BE REPRODUCED, COPIED, DISCLOSED, DISTRIBUTED,SOLD, PUBLISHED OR OTHERWISE USED IN ANYWAY WITHOUT THE ADVANCED EXPRESS WRITTEN CONSENT OF STEVEN EHRLICH ARCHITECTS. VISUAL CONTACT WITH THE ABOVE DRAWINGS, OR ANY PART THEREOF, SHALL CONSTITUTE CONCLUSIVE EVIDENCE OF ACCEPTANCE OF THESE RESTRICTIONS.

SHEET TITLE

PLUMBING LEGEND, GENERAL NOTES & SCHEDULES ROOF PLAN

DRAWN • JE

CHECKED • –

SCALE • 1/4" = 1'-0"

DATE •

FILE • -

JOB • 491 - HOFFMAN CASTLEMAN

SHEET •

P1.0

© MB&A CONSULTING ENGINEERS, MARCH 2009

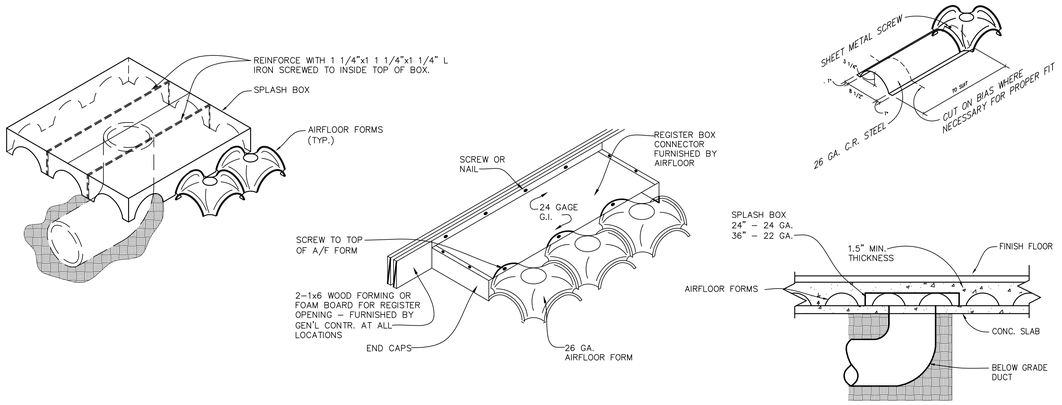

AIRFLOOR DETAILS — SCALE: NONE — 1

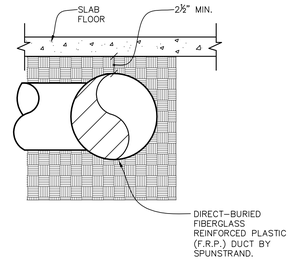

NOTE:

UNDERGROUND DUCTING SHALL BE FIBERGLASS REINFORCED PLASTIC (F.R.P.),R-5.0. MFG'R: SPUNSTRAND.

BELOW GRADE DUCT DETAIL — SCALE: NONE — 2

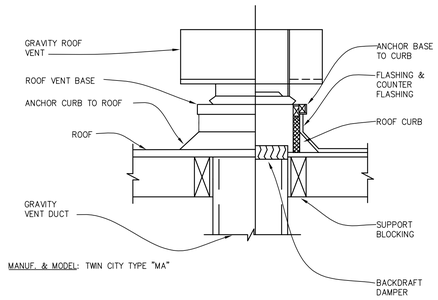

MANUF. & MODEL: TWIN CITY TYPE "MA"

OUTSIDE AIR INTAKE DETAIL — SCALE: NONE — 3

– SCALE: NONE –

– SCALE: NONE –

– SCALE: NONE –

– SCALE: NONE –

– SCALE: NONE –

– SCALE: NONE –

STEVEN EHRLICH Architects

10865 WASHINGTON BLVD

CULVER CITY, 90232.3600

TEL 310.838.9700

FAX 310.838.9737

EMAIL: INFO@S-EHRLICH.COM

HOFFMAN-CASTLEMAN RESIDENCE

1445 EL BOSQUE CT.

PACIFIC PALISADES, CALIFORNIA 90272

CONSULTANTS •

M.B.& A.

115 SO. LAMER ST.

BURBANK, CA. 91506

818 845-1585 PH

818 845-6433 FAX

NO.	DATE	REVISION

PROGRESS PRINT

NOT TO BE USED FOR CONSTRUCTION

DATE 03.11.09

THIS DRAWING AND THE DESIGNS, ARRANGEMENTS, DEPICTIONS, IDEAS AND OTHER INFORMATION CONTAINED HEREIN CONSTITUTE UNPUBLISHED WORK OF STEVEN EHRLICH ARCHITECTS AND SHALL REMAIN PROPERTY OF STEVEN EHRLICH ARCHITECTS IN PERPETUITY. NO PART THEREOF SHALL BE REPRODUCED, COPIED, DISCLOSED, DISTRIBUTED/SOLD, PUBLISHED OR OTHERWISE USED IN ANYWAY WITHOUT THE ADVANCED EXPRESS WRITTEN CONSENT OF STEVEN EHRLICH ARCHITECTS. VISUAL CONTACT WITH THE ABOVE DRAWINGS, OR ANY PART THEREOF, SHALL CONSTITUTE CONCLUSIVE EVIDENCE OF ACCEPTANCE OF THESE RESTRICTIONS.

SHEET TITLE

MECHANICAL DETAILS

DRAWN	GR
CHECKED	MB
SCALE	NONE
DATE	
FILE	-
JOB	491 - HOFFMAN CASTLEMAN
SHEET	

M3.1

© M.B.& A. CONSULTING ENGINEERS, MARCH 2009

TYPICAL FOR ALL CONTROLS DIAGRAMS
- (M) PROVIDE & INSTALLED BY MECHANICAL CONTRACTOR.
- (E) PROVIDE & INSTALLED BY ELECTRICAL CONTRACTOR
- (M/E) PROVIDE & INSTALLED BY MECHANICAL CONTRACTOR, WIRED BY ELECTRICAL

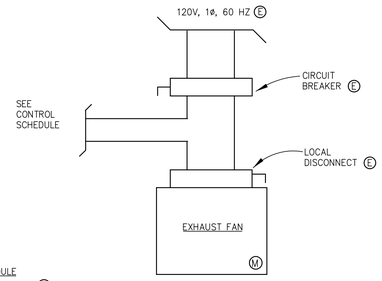

FAN CONTROL SCHEDULE

EF-1	INTERLOCK W/LIGHTS	(E)
EF-2	INTERLOCK W/LIGHTS	(E)
EF-3	MANUAL SWITCH	(E)
EF-4	MANUAL SWITCH	(E)

EXHAUST FAN CONTROL DIAGRAM — SCALE: NONE — 1

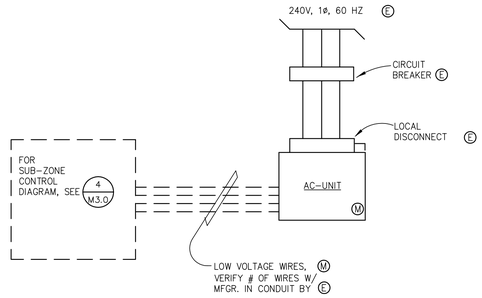

PACKAGED UNIT CONTROL DIAGRAM — SCALE: NONE — 2

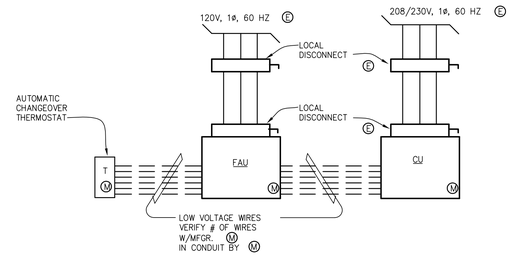

SPLIT-SYSTEM CONTROL DIAGRAM — SCALE: NONE — 3

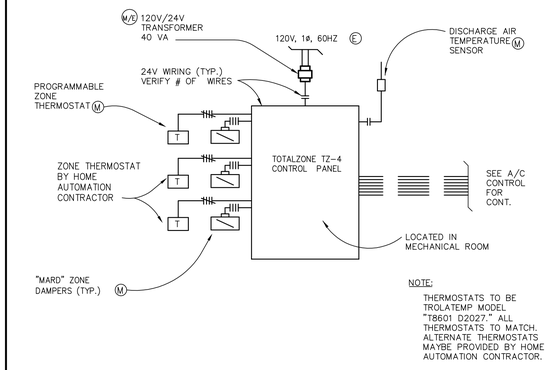

NOTE:
THERMOSTATS TO BE TROLATEMP MODEL "T8601 D2027." ALL THERMOSTATS TO MATCH. ALTERNATE THERMOSTATS MAYBE PROVIDED BY HOME AUTOMATION CONTRACTOR.

ZONE CONTROL DIAGRAM — SCALE: NONE — 4

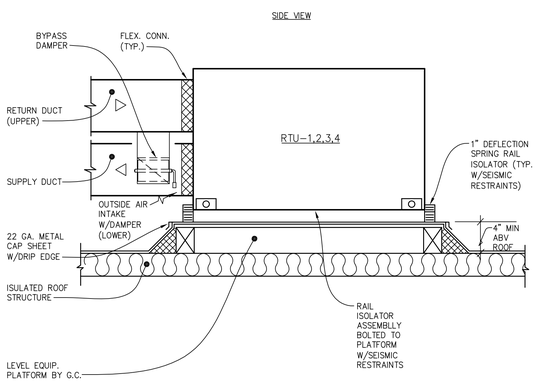

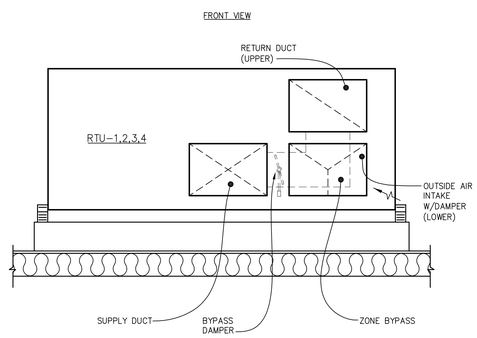

ROOFTOP PACKAGED UNIT DETAIL — SCALE: NONE — 5

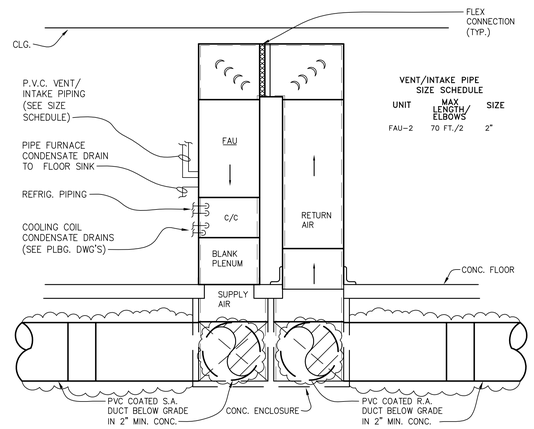

VENT/INTAKE PIPE SIZE SCHEDULE

UNIT	MAX LENGTH/ ELBOWS	SIZE
FAU-2	70 FT./2	2"

FORCED AIR UNIT DETAIL — SCALE: NONE — 6

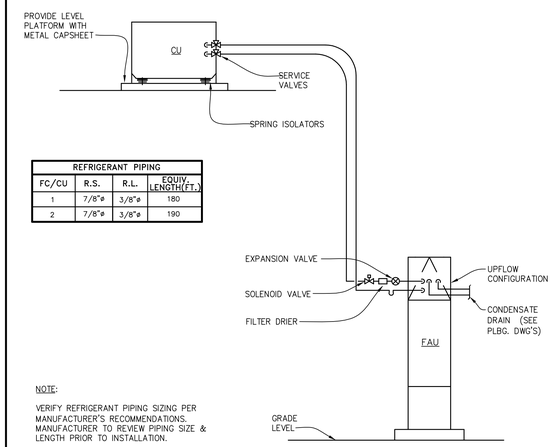

REFRIGERANT PIPING			
FC/CU	R.S.	R.L.	EQUIV. LENGTH(FT.)
1	7/8"ø	3/8"ø	180
2	7/8"ø	3/8"ø	190

NOTE:
VERIFY REFRIGERANT PIPING SIZING PER MANUFACTURER'S RECOMMENDATIONS. MANUFACTURER TO REVIEW PIPING SIZE & LENGTH PRIOR TO INSTALLATION.

SPLIT-SYSTEM REFRIG. PIPING DIAGRAM — SCALE: NONE — 7

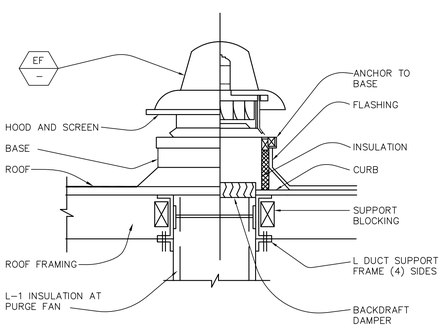

EXHAUST FAN DETAIL — SCALE: NONE — 8

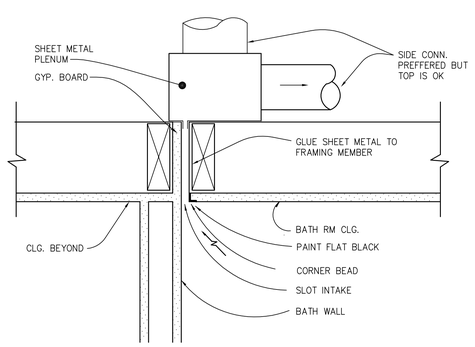

ARCHITECTURAL SLOT INTAKE DETAIL — SCALE: NONE — 9

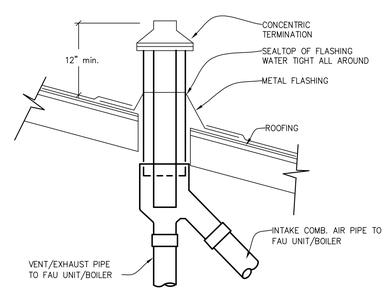

CONCENTRIC VENT DETAIL — SCALE: NONE — 10

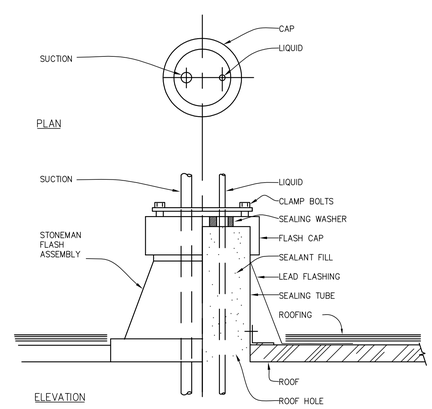

ROOF PIPE PENETRATION DETAIL — SCALE: NONE — 11

STEVEN EHRLICH Architects
10865 WASHINGTON BLVD
CULVER CITY, 90232.3600
TEL 310.838.9700
FAX 310.838.9737
EMAIL: INFO@S-EHRLICH.COM

HOFFMAN-CASTLEMAN RESIDENCE
1445 EL BOSQUE CT.
PACIFIC PALISADES, CALIFORNIA 90272

CONSULTANTS •

M.B.& A.
115 SO. LAMER ST.
BURBANK, CA. 91506
818 845-1585 PH
818 845-6433 FAX

NO.	DATE	REVISION

PROGRESS PRINT
NOT TO BE USED FOR CONSTRUCTION
DATE 03.11.09

THIS DRAWING AND THE DESIGNS, ARRANGEMENTS, DEPICTIONS, IDEAS AND OTHER INFORMATION CONTAINED HEREIN CONSTITUTE UNPUBLISHED WORK OF STEVEN EHRLICH ARCHITECTS AND SHALL REMAIN PROPERTY OF STEVEN EHRLICH ARCHITECTS IN PERPETUITY. NO PART THEREOF SHALL BE REPRODUCED, COPIED, DISCLOSED, DISTRIBUTED,SOLD, PUBLISHED OR OTHERWISE USED IN ANYWAY WITHOUT THE ADVANCED EXPRESS WRITTEN CONSENT OF STEVEN EHRLICH ARCHITECTS. VISUAL CONTACT WITH THE ABOVE DRAWINGS, OR ANY PART THEREOF, SHALL CONSTITUTE CONCLUSIVE EVIDENCE OF ACCEPTANCE OF THESE RESTRICTIONS.

SHEET TITLE
MECHANICAL DETAILS

DRAWN	• GR
CHECKED	• MB
SCALE	• NONE
DATE	•
FILE	• -
JOB	• 491 - HOFFMAN CASTLEMAN
SHEET	•

M3.0

© MB&A CONSULTING ENGINEERS, MARCH 2009

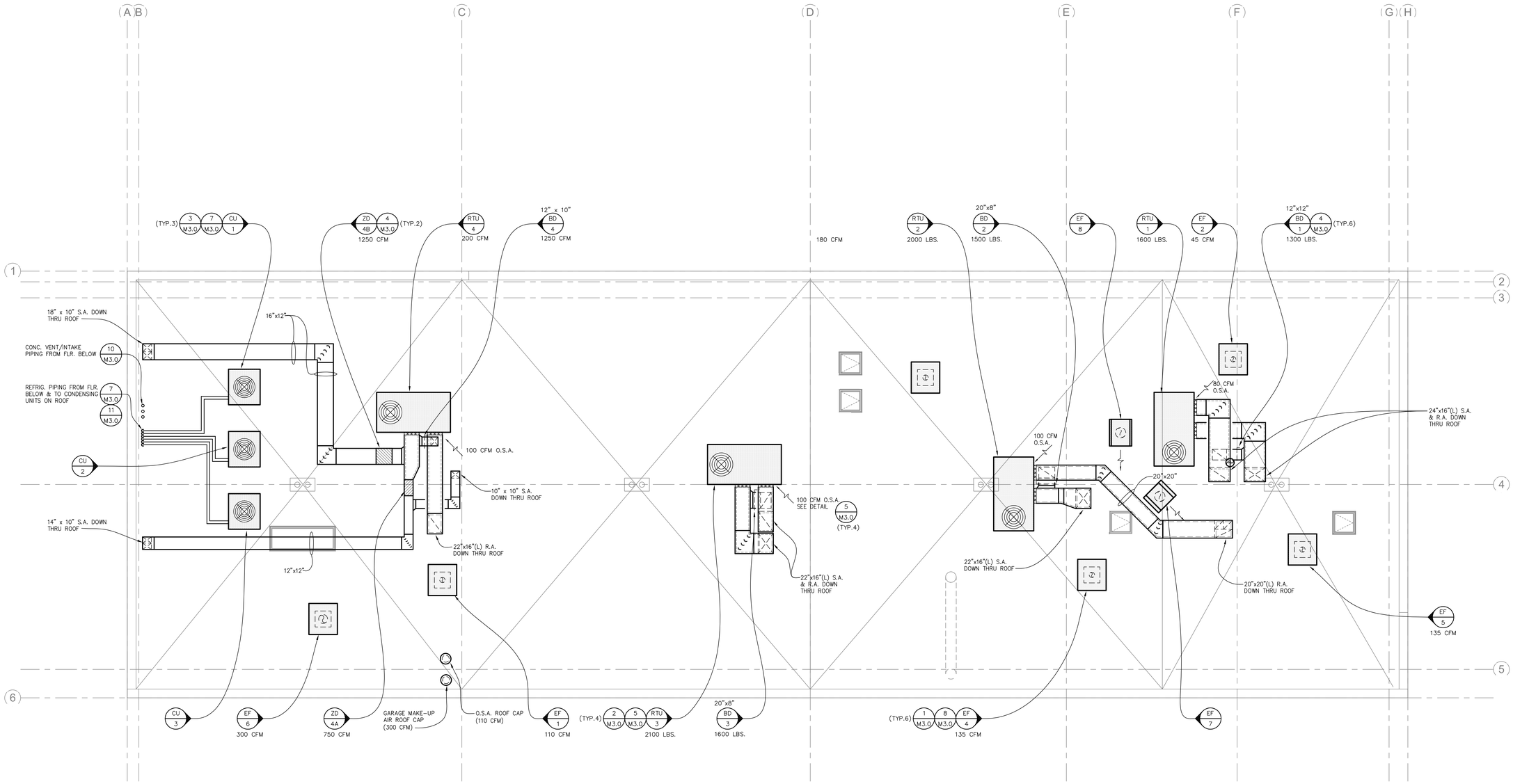

STEVEN EHRLICH Architects

10865 WASHINGTON BLVD

CULVER CITY, 90232.3600

T E L 310.838.9700

F A X 310.838.9737

EMAIL: INFO@S-EHRLICH.COM

HOFFMAN-CASTLEMAN RESIDENCE

1445 EL BOSQUE CT.

PACIFIC PALISADES, CALIFORNIA 90272

CONSULTANTS •

M.B.& A.

115 SO. LAMER ST.

BURBANK, CA. 91506

818 845-1585 PH

818 845-6433 FAX

NO.	DATE	REVISION

PROGRESS PRINT

NOT TO BE USED FOR CONSTRUCTION

DATE 03.11.09

THIS DRAWING AND THE DESIGNS, ARRANGEMENTS, DEPICTIONS, IDEAS AND OTHER INFORMATION CONTAINED HEREIN CONSTITUTE UNPUBLISHED WORK OF STEVEN EHRLICH ARCHITECTS AND SHALL REMAIN PROPERTY OF STEVEN EHRLICH ARCHITECTS IN PERPETUITY. NO PART THEREOF SHALL BE REPRODUCED, COPIED, DISCLOSED, DISTRIBUTED,SOLD, PUBLISHED OR OTHERWISE USED IN ANYWAY WITHOUT THE ADVANCED EXPRESS WRITTEN CONSENT OF STEVEN EHRLICH ARCHITECTS. VISUAL CONTACT WITH THE ABOVE DRAWINGS, OR ANY PART THEREOF, SHALL CONSTITUTE CONCLUSIVE EVIDENCE OF ACCEPTANCE OF THESE RESTRICTIONS.

SHEET TITLE

MECHANICAL ROOF PLAN

DRAWN	• GR
CHECKED	• MB
SCALE	• 1/4" = 1'-0"
DATE	•
FILE	• -
JOB	• 491 - HOFFMAN CASTLEMAN
SHEET	•

M2.3

© MB&A CONSULTING ENGINEERS, MARCH 2009

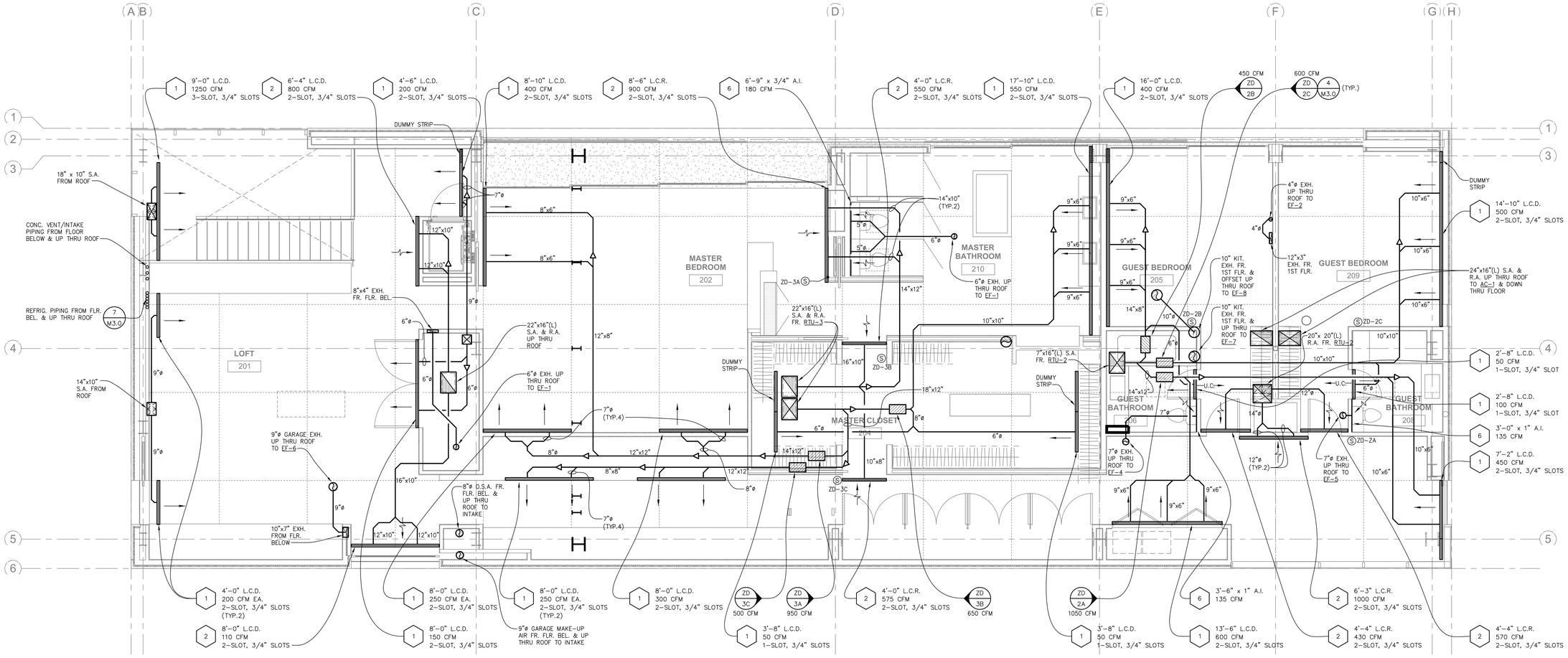

STEVEN EHRLICH Architects

10865 WASHINGTON BLVD

CULVER CITY, 90232.3600

TEL 310.838.9700

FAX 310.838.9737

EMAIL: INFO@S-EHRLICH.COM

HOFFMAN-CASTLEMAN RESIDENCE

1445 EL BOSQUE CT.

PACIFIC PALISADES, CALIFORNIA 90272

CONSULTANTS •

M.B.& A.

115 SO. LAMER ST.

BURBANK, CA. 91506

818 845-1585 PH

818 845-6433 FAX

NO.	DATE	REVISION

PROGRESS PRINT

NOT TO BE USED FOR CONSTRUCTION

DATE 03.11.09

THIS DRAWING AND THE DESIGNS, ARRANGEMENTS, DEPICTIONS, IDEAS AND OTHER INFORMATION CONTAINED HEREIN CONSTITUTE UNPUBLISHED WORK OF STEVEN EHRLICH ARCHITECTS AND SHALL REMAIN PROPERTY OF STEVEN EHRLICH ARCHITECTS IN PERPETUITY. NO PART THEREOF SHALL BE REPRODUCED, COPIED, DISCLOSED, DISTRIBUTED,SOLD, PUBLISHED OR OTHERWISE USED IN ANYWAY WITHOUT THE ADVANCED EXPRESS WRITTEN CONSENT OF STEVEN EHRLICH ARCHITECTS. VISUAL CONTACT WITH THE ABOVE DRAWINGS, OR ANY PART THEREOF, SHALL CONSTITUTE CONCLUSIVE EVIDENCE OF ACCEPTANCE OF THESE RESTRICTIONS.

SHEET TITLE

SECOND FLOOR MECHANICAL PLAN

DRAWN	• GR
CHECKED	• MB
SCALE	• 1/4" = 1'-0"
DATE	•
FILE	• -
JOB	• 491 - HOFFMAN CASTLEMAN
SHEET	•

M2.2

© MB&A CONSULTING ENGINEERS, MARCH 2009

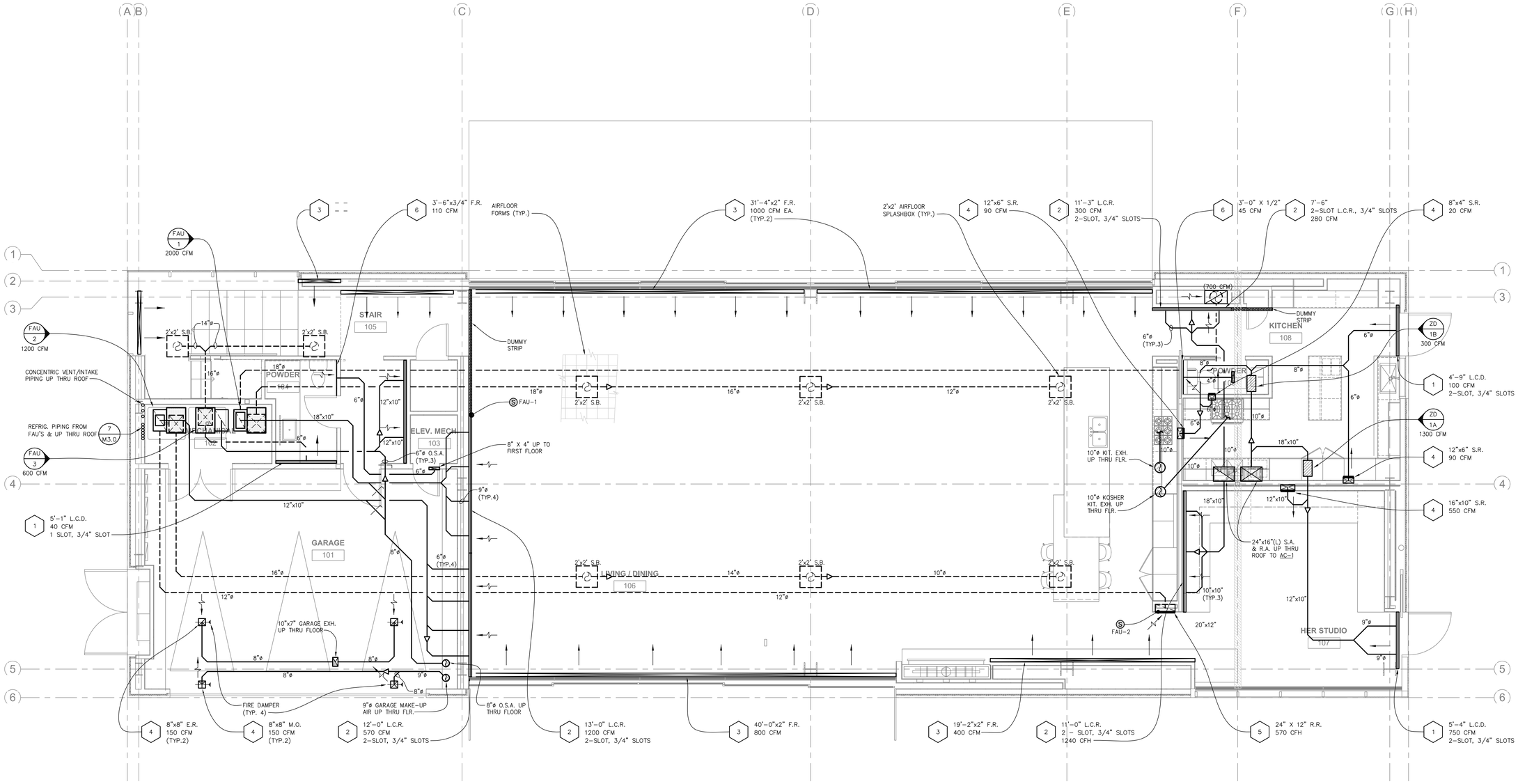

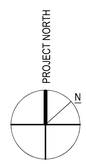

STEVEN EHRLICH Architects

10865 WASHINGTON BLVD

CULVER CITY, 90232.3600

TEL 310.838.9700

FAX 310.838.9737

EMAIL: INFO@S-EHRLICH.COM

HOFFMAN-CASTLEMAN RESIDENCE

1445 EL BOSQUE CT.
PACIFIC PALISADES, CALIFORNIA 90272

CONSULTANTS •

M.B.& A.

115 SO. LAMER ST.

BURBANK, CA. 91506

818 845-1585 PH

818 845-6433 FAX

NO.	DATE	REVISION

PROGRESS PRINT

NOT TO BE USED FOR CONSTRUCTION

DATE 03.11.09

THIS DRAWING AND THE DESIGNS, ARRANGEMENTS, DEPICTIONS, IDEAS AND OTHER INFORMATION CONTAINED HEREIN CONSTITUTE UNPUBLISHED WORK OF STEVEN EHRLICH ARCHITECTS AND SHALL REMAIN PROPERTY OF STEVEN EHRLICH ARCHITECTS IN PERPETUITY. NO PART THEREOF SHALL BE REPRODUCED, COPIED, DISCLOSED, DISTRIBUTED,SOLD, PUBLISHED OR OTHERWISE USED IN ANYWAY WITHOUT THE ADVANCED EXPRESS WRITTEN CONSENT OF STEVEN EHRLICH ARCHITECTS. VISUAL CONTACT WITH THE ABOVE DRAWINGS, OR ANY PART THEREOF, SHALL CONSTITUTE CONCLUSIVE EVIDENCE OF ACCEPTANCE OF THESE RESTRICTIONS.

SHEET TITLE

FIRST FLOOR MECHANICAL PLAN

DRAWN	GR
CHECKED	MB
SCALE	1/4" = 1'-0"
DATE	•
FILE	-
JOB	491 - HOFFMAN CASTLEMAN
SHEET	•

M2.1

© MB&A CONSULTING ENGINEERS, MARCH 2009

FAN SCHEDULE

SYM	SERVICE	LOCATION	MFG'R	MODEL	TYPE	C.F.M.	TOTAL S.P. "H_2O	MAX TIP SPEED F.P.M.	DRIVE	FAN R.P.M.	MOTOR @ 60HZ. H.P.	VOLTS	ø	SONES	WT. LBS.	REMARKS
EF-1	POWDER 104	ROOF	COOK	70HLC15DH	LOW-PROFILE ROOFTOP	110	0.25	2437	DIRECT	1330	71W	120	1	2.2	97	PROVIDE BACKDRAFT DAMPER & ROOF CURB, COASTAL FINISHES REQUIRED.
EF-2	POWDER 109			70HLC15DL		45	0.15	1896		1035	48.4W			1.1		
EF-3	M.BATH 210			70HLC15DH		100	0.15	2860		1561	89.3W			3.3		
EF-4	GUEST BATH 209					135	0.10	2202		1202	68W			1.9		
EF-5	GUEST BATH 208													1.9		
EF-6	GARAGE 101			90HLC15DH		300	0.20	2502		1062	74.5W			3.6	105	
EF-7	KOSHER KITCHEN		WOLF	801640		600										COORDINATE WITH KITCHEN CONSULTANT BEFORE PURCHASE AND INSTALLATION, 10"ø DUCT RUN TO BE 50'-0" EQUIV. LENGTH (ADD 3'-0" FOR EACH 90°ELBOW), PROVIDE BACKDRAFT DAMPER & ROOF CURB, COASTAL FINISHES REQUIRED.
EF-8	KITCHEN			804701		1500										

PACKAGED GAS-ELECTRIC ROOFTOP UNIT SCHEDULE

SYMBOL	SERVICE	LOCATION	MFG'R	MODEL	C.F.M.	EXT. S.P. "H2O	ENT. AIR °F D.B.	ENT. AIR °F W.B.	AMB. AIR °F	COOL CAP MBH TOTAL	COOL CAP MBH SENS.	HTG. CAP MBH IN	HTG. CAP MBH OUT	ELECT. DATA @ 240V,1ø,60 HZ COMP.	EVAP.	COND.	MCA	SEER	AFUE	O.S.A. CFM	WT. LBS.	REMARKS
RTU-1	KITCHEN, ELLEN'S OFFICE	ROOF	YORK	ZJ048	1600	0.6	95	67	85	49.0	36.2	75.0	60.0	21.1 RLA 113.0 LRA	7.6 FLA	2.3 FLA	45	13.0	80.9	80	700	R410, ROOF CURB, SPRING ISOLATORS, OUTSIDE AIR INTAKE HOOD, OUTSIDE AIR INTAKE DAMPER, HERESITE-COATED COILS, COASTAL FINISH.
RTU-2	EXCERCISE, GUEST BEDRMS.			ZJ060	2000					59.9	42.7	100.0	80.0	28.8 RLA 145.0 LRA	5.2 FLA	2.3 FLA	60		80.9	100		
RTU-3	MASTER BED, MASTER BATH			ZJ060	2100															100		
RTU-4	LIVING RM., ART STORAGE			ZJ060	2000															100		

OUTDOOR CONDENSING UNIT SCHEDULE

SYMBOL	SERVICE	LOCATION	MFG'R	MODEL	COOL CAP MBH TOTAL	COOL CAP MBH SENS.	O.S.A. AMB.	ELECTRICAL DATA @ 60 HZ. VOLTS	ø	COMP.	COND.	MCA	SEER	WT. LBS.	REMARKS
CU-1	FAU-1	ROOF	CARRIER	24APA5 060	48.2	36.8	95°F	240	1	26.4 RLA 134.0 LRA	1.3 FLA	34.3	14.0	400	R410, ROOF CURB, SPRING ISOLATORS
CU-2	FAU-2			24APA5 036	36.8	27.8				16.7 RLA 79.0 LRA	1.1 FLA	21.9	14.0	300	
CU-3	FAU-3			24APA5 048	48.2	36.8				21.8 RLA 117 LRA	1.3 FLA	28.5	14.0	380	

FORCED AIR UNIT SCHEDULE

SYMBOL	LOCATION	MODEL	MFG'R	C.F.M.	EXT. S.P. "H_2O	ENT. AIR °F D.B.	ENT. AIR °F W.B.	FAN R.P.M.	HTG. CAP MBH INPUT	HTG. CAP MBH OUTPUT	ELECT. DATA @ 60 HZ. H.P.	AMPS	VOLTS	ø	WT. LBS.	COOL COIL	O.S.A. CFM	REMARKS
FAU-1	1ST FLOOR MECH RM	58MXB 080-20	CARRIER	2000	0.4	95	67.0	HIGH MED	80	75	3/4	11.1	120	1	100	PURON CNPV 060	100	HI-EFFICIENCY, DIRECT VENT/INTAKE W/ CONCENTRIC TERMINAL, TXV, DOWNSHOT DISCHARGE
FAU-2	1ST FLOOR MECH RM	58MXB 060-12		1200	0.4		67.0	HIGH MED	60	56	1/3	5.8	120	1	60	PURON CNPV 036	60	
FAU-3	1ST FLOOR MECH RM	58MXB 060-16		1600	0.4		67.0	HIGH MED	60	56	1/2	7.9	120	1	80	PURON CNPV 048	80	

ZONE DAMPER SCHEDULE

SYMBOL	SERVICE	LOCATION	MFG'R	MODEL	SIZE	MAX CFM	S.P. "HO	VEL. (FPM)	APPROX. WT.(LBS.)	REMARKS
ZD-1A	KITCHEN 108, POWDER 106	ELLEN'S OFFICE 107	HONEYWELL	TOTAL ZONE TZ-4		1300	< 0.01	975	26	PROVIDE A COMPLETE SUB ZONE SYSTEM W/ CONTROL PANEL, DAMPERS, DISCHARGE AIR CONTROLS, HIGH & LOW LIMIT CONTROL, & ACCESS. THERMOSTATS WITH REMOTE SENSORS SHALL BE CAPABLE OF INTERFACE WITH THE HOME MANAGEMENT SYSTEM MFG'R. PROVIDED.
ZD-1B	ELLEN'S OFFICE 107					300	< 0.01	750	26	
BD-1	AC-1	LIVING/DINING 106				1300	< 0.01	975	26	GRAVITY BYPASS. PROVIDE ACCESS.
ZD-2A	EXCERCISE 207	MASTER CLOSET 204				1050	< 0.01	1000	26	PROVIDE A COMPLETE SUB ZONE SYSTEM W/ CONTROL PANEL, DAMPERS, DISCHARGE AIR CONTROLS, HIGH & LOW LIMIT CONTROL, & ACCESS. THERMOSTATS WITH REMOTE SENSORS SHALL BE CAPABLE OF INTERFACE WITH THE HOME MANAGEMENT SYSTEM MFG'R. PROVIDED.
ZD-2B	GUEST BEDROOM 205, GUEST BATHROOM 206					450	< 0.01	650	26	
ZD-2C	GUEST BEDROOM 209, GUEST BATHROOM 208					600	< 0.01	650	26	
BD-2	AC-2					1500	< 0.01	1000	26	GRAVITY BYPASS. PROVIDE ACCESS.
ZD-3A	MASTER BEDROOM 202					950	< 0.01	850	26	PROVIDE A COMPLETE SUB ZONE SYSTEM W/ CONTROL PANEL, DAMPERS, DISCHARGE AIR CONTROLS, HIGH & LOW LIMIT CONTROL, & ACCESS. THERMOSTATS WITH REMOTE SENSORS SHALL BE CAPABLE OF INTERFACE WITH THE HOME MANAGEMENT SYSTEM MFG'R. PROVIDED.
ZD-3B	MASTER BATHROOM 210, MASTER CLOSET 204					650	< 0.01	875	26	
ZD-3C	SOUTH HALL (BY MASTER BED/BATH/CLOSET)					500	< 0.01	875	26	
BD-3	AC-3					1600	< 0.01	875	26	GRAVITY BYPASS. PROVIDE ACCESS.
ZD-4A	LIVING ROOM/ ART STORAGE 201	CLOSET @LIVING RM 201				750	< 0.01	900	26	PROVIDE A COMPLETE SUB ZONE SYSTEM W/ CONTROL PANEL, DAMPERS, DISCHARGE AIR CONTROLS, HIGH & LOW LIMIT CONTROL, & ACCESS. THERMOSTATS WITH REMOTE SENSORS SHALL BE CAPABLE OF INTERFACE WITH THE HOME MANAGEMENT SYSTEM MFG'R. PROVIDED.
ZD-4B	2ND FLR. STAIR AREA					1250	< 0.01	520	26	
BD-4	AC-4					1250	< 0.01		26	GRAVITY BYPASS. PROVIDE ACCESS.

NOTE: ZONE DAMPERS COULD EITHER BE ROUND OR RECTANGULAR.

GENERAL NOTES

1. PLATFORMS, CURBS & FLASHINGS FOR MECHANICAL EQUIPMENT SHALL BE FURNISHED & INSTALLED BY THE GENERAL CONTRACTOR, UNLESS NOTED OTHERWISE.
2. THE MECHANICAL CONTRACTOR MUST VERIFY & COORDINATE ALL FLOORS, WALL & ROOF OPENINGS W/GENERAL CONTRACTOR PRIOR TO INSTALLATION OF EQUIPMENT & DUCTWORK. (SEE STRUCTURAL DRAWINGS)
3. REFER TO ARCHITECTURAL PLAN DRAWINGS FOR EXACT LOCATIONS OF AIR DISTRIBUTION DEVICES.
4. INSIDE OF PLENUMS, DUCTS ETC., BEHIND ALL AIR DISTRIBUTION DEVICES SHALL BE PAINTED FLAT BLACK.
5. DESIGN CRITERIA, PACIFIC PALISADES, CALIFORNIA:

   SUMMER:
   OUTSIDE: 95 DEG. FDB 68 DEG. FWB
   INSIDE: 75 DEG. FDB 50% + RH

   WINTER:
   OUTSIDE: 32 DEG. FDB
   INSIDE: 70 DEG. FDB

6. ALL LOW VOLTAGE (24 V.) WIRING BY CONTROL CONTRACTOR. ALL CONDUIT BY ELECTRIC CONTRACTOR.
7. THE AIR CONDITIONING CONTRACTOR SHALL BE RESPONSIBLE FOR THE ACQUISITION & PAYMENT OF ALL PERMITS & INSPECTIONS REQUIRED & RELATED FEES FOR THIS INSTALLATION. ALL WORK SHALL COMPLY WITH STATE AND LOCAL CODES. (2001 CALIFORNIA MECHANICAL CODE-C.M.C.)
8. SPIRAL SEAM G.I. ROUND DUCTWORK MAY BE INTERCHANGED WITH THE SQUARE OR RECTANGULAR DUCTWORK (IN CONCEALED SPACES ONLY) AT CONTRACTOR'S OPTION, SPACE PERMITTING.
9. PROVIDE A 3/4" MIN. PRIMARY & SECONDARY CONDENSATE DRAIN FROM EACH UNIT TO A CITY APPROVED RECEPTOR.
10. CODE APPROVED (WITH SCRIM CLOTH) FLEXIBLE DUCT MAY BE USED IN CONCEALED SPACES FOR PLENUM AND DIFFUSER CONNECTIONS WITH ENGINEERS APPROVAL. MAXIMUM 7'-0" LONG.
11. ALL CONNECTIONS BETWEEN A.C. UNITS/FANS AND DUCTWORK, OR PUMPS AND PIPING, SHALL HAVE FIREPROOF, HEAVY DUTY FLEX-CONNECTIONS (CITY APPROVED) WITH 3" MIN. CLEARANCE. ISOLATE ALL H.V.A.C. UNITS/FANS & EQUIPMENT FROM STRUCTURE WITH APPROVED ISOLATION MOUNTS.
12. ALL WEATHER EXPOSED EQUIPMENT, ETC., SHALL BE COMPLETELY WEATHERPROOFED.
13. MANUAL VOLUME DAMPER SHALL BE PROVIDED IN ALL DUCT TAKE-OFFS TO INDIVIDUAL CEILING DIFFUSERS, REGISTERS AND GRILLES. PROVIDE REMOTE OPERATORS WHERE NECESSARY.
14. S.E.E.R., H.S.P.F., & C.O.P. & A.F.U.E. RATING OF EACH H.V.A.C. UNIT SHALL COMPLY WITH STATE REQUIREMENTS.
15. ALL S.A. & R.A. DUCTS, AS INDICATED ON THE DRAWINGS, SHALL BE LINED WITH 1" THICK 1 1/2 LB. DENSITY FIBERGLASS WITH VINYL FACE TO AIR STREAM. SEAL ALL RAW EDGES. ALL OTHER S.A. & R.A DUCTS SHALL BE WRAPPED WITH 1 LB. DENSITY FIBERGLASS INSULATION 1 1/2" THICK S.A., 1" THICK R.A. WIRED IN PLACE. PROVIDE VAPOR BARRIER ON S.A. DUCT.
16. FURNISH COMPLETE MAINTENANCE INFORMATION. REQUIRED ROUTINE MAINTENANCE ACTIONS SHALL BE CLEARLY STATED & INCORPORATED ON A READILY ACCESSIBLE LABEL.
17. GAS BURNING APPLIANCES TO BE EQUIPPED WITH STATE APPROVED I.I.D.
18. GAS BURNING APPLIANCES TO BE INSTALLED IN ACCORDANCE WITH THE AGA APPROVED CONDITIONS & MANUFACTURER'S INSTALLATION REQUIREMENTS.
19. ALL O.S.A. INTAKES AND EXHAUST FANS TO BE PROVIDED WITH BACK DRAFT DAMPERS.
20. TRANSVERSE JOINTS ON DUCTWORK SHALL BE SEALED WITH "CASCOTE", OR AN APPROVED EQUAL.
21. EACH NEW A.C. SYSTEM SHALL BE CONTROLLED BY A TIME SWITCH, AS PER STATE REQUIREMENTS.
22. DUCTWORK SHALL COMPLY WITH CHAPTER 6 C.M.C.
23. DUCT INSULATION SHALL BE AS PER TABLE 6-4 C.M.C.
24. FIRE DAMPERS SHALL BE AS PER SECTION 606, C.M.C.
25. CONTRACTOR SHALL SUBMIT FOR APPROVAL ANY EQUIPMENT OR MATERIALS THAT DEVIATE FROM THE CONTRACT DOCUMENTS.
26. SPECIFICATIONS ARE A PART OF THIS CONTRACT. CONTRACTOR SHALL REQUEST SPECIFICATIONS IF NONE ARE PROVIDED PRIOR TO BID.
27. CONTRACTOR SHALL VISIT THE JOB-SITE & EXAMINE EXISTING CONDITIONS PRIOR TO COMPLETION OF BID.

ROOF NOTES

1. ALL O.S.A. INTAKES SHALL BE WEATHERPROOF AND PROVIDED WITH 1/4" X 1/4" HARDWARE CLOTH. ALSO PROVIDE B.D.D. AT EACH UNIT.
2. ALL O.S.A. INTAKES SHALL BE 10'-0" FROM OR 3'-0" BELOW ANY VENTS OR EXHAUST OUTLETS.
3. ALL ROOF AND WALL OPENINGS BY GENERAL CONTRACTOR.
4. FLASH AND COUNTER FLASH ALL DUCTWORK AT ROOF AND WALL PENETRATIONS.
5. ALL WEATHER EXPOSED EQUIPMENT ON ROOF TO BE SUITABLE FOR OUTDOOR INSTALLATION.
6. GENERAL CONTRACTOR TO MAKE PROVISIONS FOR LEVEL EQUIPMENT MOUNTING.
7. SEE PLUMBING DRAWINGS FOR CONDENSATE DRAINS & GAS PIPING.
8. MAINTAIN MINIMUM SERVICE CLEARANCES, AS REQUIRED BY EQUIPMENT MANUFACTURER.
9. ALL EQUIPMENT SHALL BE SECURELY BOLTED DOWN TO WITHSTAND 1.5 G. OF HORIZONTAL FORCE.

TITLE 24 NOTES (RES.) – 2005 BUILDING ENERGY EFFICIENCY STANDARDS TITLE 24, PART 1 AND 6

1. ALL HVAC SYSTEMS AND EQUIPMENT SHALL COMPLY WITH SECTION 112, TITLE 24, PART 6.
2. SPACE CONDITIONING EQUIPMENT CONTROLS SHALL COMPLY WITH SECTION 150(i), TITLE 24, PART 6.
3. PIPING INSULATION SHALL BE PROVIDED PER SECTION 150(j), TITLE 24, PART 6.
4. AIR DUCT DISTRIBUTION SYSTEMS SHALL MEET THE REQUIREMENTS OF SECTION 150(m), TITLE 24, PART 6.
5. MECHANICAL SYSTEMS ACCEPTANCE DOCUMENTATION SHALL BE PROVIDED BY THE CONTRACTOR PER SECTIONS 150, 151, & 152, TITLE 24, PART 6 AS APPLICABLE.
6. CONTRACTOR SHALL REVIEW ALL TITLE 24 COMPLIANCE DOCUMENTATION FOR ANY THIRD PARTY VERIFICATION REQUIREMENTS THAT MAY BE APPLICABLE TO THIS PROJECT.
7. CONTRACTOR SHALL PROVIDE ALL INSTALLATION CERTIFICATES, ACCEPTANCE CERTIFICATES, & OPERATION & MAINTENANCE INFORMATION PER ARTICLE 1, SECTION 10-103 TO 10-114, TITLE 24, PART 1.
8. ALL OCCUPANCIES SHALL COMPLY WITH TITLE 24 PART 6 GENERAL PROVISIONS SECTIONS 100 THRU 102.

THE 2005 CALIFORNIA BUILDING ENERGY EFFICIENCY STANDARDS HAVE BEEN REVIEWED AND THE DESIGN COMPLIES WITH THESE STANDARDS.

LEGEND

SYMBOL	ABBREV.	DESCRIPTION
	22×12 (L)	ACOUSTICALLY LINED DUCTWORK OR PLENUM; SIZES GIVEN ARE SHEET METAL
	22×10	DUCT DIMENSIONS:FIRST DIM.IS PLAN VIEWED AND/OR HORIZONTAL, SECOND DIM. IS DEPTH AND/OR VERTICAL
	B.D.D.	BACKDRAFT DAMPER
	M.V.D.	MANUAL VOLUME DAMPER
	F.D.	FIRE DAMPER
	F.S.D.	FIRE SMOKE DAMPER
	TRANS.	TRANSITION
		RETURN LOOKING AWAY FROM VIEWER
		SUPPLY LOOKING AWAY FROM VIEWER
	FLEX.CONN.	FLEXIBLE CONNECTION
		SUPPLY DUCT LOOKING TOWARD VIEWER
		INCLINED RISE OR DROP IN DIRECTION OF AIR FLOW
		BREAK IN DUCT RUN FOR DRAWING CLARIFICATION
	9"TH.	THROAT SIZE,NET.
	P.O.C.	POINT OF CONNECTION
	C.D.	SUPPLY DIFFUSER (ARROW INDICATES DIRECTION OF AIR FLOW)
	C.R.	EXHAUST OR RETURN REGISTER (C.G.-GRILLE)
	T.R.	TOP REGISTER W/ EXTRACTER (T.G.-GRILLE)
	B.R.	BOTTOM REGISTER W/ EXTRACTER (B.G.-GRILLE)
	T.V.	MITERED ELBOW W/ DOUBLE THICKNESS AIRFOIL TYPE TURNING VANES
	C.F.M.	CUBIC FEET PER MINUTE
	S.A.	SUPPLY AIR
	R.A.	RETURN AIR
	O.S.A.	OUTSIDE AIR
	M.A.	MIXED AIR
	A.P.	ACCESS PANEL (CEILING)
	EXH.	EXHAUST DUCT (IN SECTION)
		RETURN DUCT (IN SECTION)
	A.D.	ACCESS DOOR
	L.D.	STRIP TYPE DIFUSERS (ARROWS INDICATE DIRECTION OF AIR FLOW) (PLENUM SHOWN SOLID)
		EXHAUST,RETURN,OR TRANSFER AIR
	C.D.	ROUND CEILING DIFFUSER
U.C. OR 1.5 ⌀	U.C.	UNDERCUT OR LOUVER
	D.L.	DOOR LOUVER W/ GROSS AREA
D	S.D.	SMOKE DETECTOR
T	T'STAT	THERMOSTAT
	U.N.O.	UNLESS NOTED OTHERWISE
EF 2		EQUIPMENT REFERENCE
B M-2		SECTION REFERENCE
1		AIR DISTRIBUTION DEVICE

SHEET METAL DUCT & FITTING GAUGES

MAX. DIA. OR WIDTH OF DUCT & FITTING	G.I. SHEET METAL GAUGES *	1 1/2" WIDE DUCT HANGER
12"& SMALLER	26	18 GA. MIN. @ MAX. 10FT. O.C.
13" THRU 30"	24	18 GA. MIN. @ MAX. 10FT. O.C.

MECHANICAL ABBREVIATIONS

ABBREVIATION	DESCRIPTION	ABBREVIATION	DESCRIPTION
ABV.	ABOVE	HDR.	HEADER
BEL.	BELOW	@	AT
DN.	DOWN	W/	WITH
FR.	FROM	CONN.	CONNECT, CONNECTION
X.	EXISTING	LBS.	POUNDS
FLR.	FLOOR	POC	POINT OF CONNECTION
CLG.	CEILING	FIN.	FINISH
N.I.C.	NOT IN CONTRACT	DBL.	DOUBLE
EL./ELEV.	ELEVATION	ASSY.	ASSEMBLY
℄	CENTERLINE	CONT.	CONTINUATION
CONTR.	CONTRACTOR	VTR	VENT THRU ROOF
TYP.	TYPICAL	GRD	GRADE
S.P.	STATIC PRESSURE	PRESS	PRESSURE
GPM	GALLONS PER MINUTE	MAX./MIN.	MAXIMUM/MINIMUM
AP	ACCESS PANEL	O.C.	ON CENTER
WT.	WEIGHT	F.S.	FLOOR SINK
S.B.	AIRFLOOR SPLASHBOX	F.A.	FREE AREA

AIR DISTRIBUTION TYPE SCHEDULE

SYMBOL	TYPE & DESCRIPTION	MAKE & MODEL
1 L.C.D.	LINEAR CEILING DIFFUSER, SURFACE MOUNT, SLOT TYPE, PATTERN & VOLUME CONTROLLER, & END CAPS	ANEMOSTAT SLAD
2 L.C.R.	LINEAR CEILING RETURN, SURFACE MOUNT, SLOT TYPE, VOLUME CONTROLLER, & END CAPS	ANEMOSTAT SLAR
3 F.R.	FLOOR REGISTER, SURFACE MOUNT, DOUBLE DEFLECTION, #7 BORDER, & O.B.D	ANEMOSTAT TL 2N
4 S.R.	SUPPLY REGISTER, SURFACE MOUNT, DOUBLE DEFLECTION, SILHOUETTE FINISH, & O.B.D	ANEMOSTAT XR 2
5 R.R.	RETURN REGISTER, SURFACE MOUNT, SINGLE DEFLECTION, SILHOUETTE FINISH, & O.B.D	ANEMOSTAT XR 3
6 A.I.	ARCHITECTURAL EXHAUST INTAKE, FREE AREA DIMENSIONS LISTED IN PLANS	SEE 9/M3.0

* VERIFY ALL FINISHES, BORDERS AND FRAME TYPES WITH ARCHITECT PRIOR TO ORDERING ANY AIR DEVICES.

STEVEN EHRLICH Architects
10865 WASHINGTON BLVD
CULVER CITY, 90232.3600
TEL 310.838.9700
FAX 310.838.9737
EMAIL: INFO@S-EHRLICH.COM

HOFFMAN-CASTLEMAN RESIDENCE
1445 EL BOSQUE CT.
PACIFIC PALISADES, CALIFORNIA 90272

CONSULTANTS •
M.B.& A.
115 SO. LAMER ST.
BURBANK, CA. 91506
818 845-1585 PH
818 845-6433 FAX

NO.	DATE	REVISION

PROGRESS PRINT
NOT TO BE USED FOR CONSTRUCTION
DATE 03.11.09

THIS DRAWING AND THE DESIGNS, ARRANGEMENTS, DEPICTIONS, IDEAS AND OTHER INFORMATION CONTAINED HEREIN CONSTITUTE UNPUBLISHED WORK OF STEVEN EHRLICH ARCHITECTS AND SHALL REMAIN PROPERTY OF STEVEN EHRLICH ARCHITECTS IN PERPETUITY. NO PART THEREOF SHALL BE REPRODUCED, COPIED, DISCLOSED, DISTRIBUTED,SOLD, PUBLISHED OR OTHERWISE USED IN ANYWAY WITHOUT THE ADVANCED EXPRESS WRITTEN CONSENT OF STEVEN EHRLICH ARCHITECTS. VISUAL CONTACT WITH THE ABOVE DRAWINGS, OR ANY PART THEREOF, SHALL CONSTITUTE CONCLUSIVE EVIDENCE OF ACCEPTANCE OF THESE RESTRICTIONS.

SHEET TITLE
MECHANICAL LEGEND, SCHEDULES AND NOTES

DRAWN	• GR
CHECKED	• MB
SCALE	• NONE
DATE	•
FILE	• -
JOB	• 491 - HOFFMAN CASTLEMAN
SHEET	•

M1.0

©MB&A CONSULTING ENGINEERS, MARCH 2009